LAPPSET®

FLORA

ASENNUSOHJE
MONTERINGSANSVISNING
INSTALLATION INSTRUCTION
AUFBAUANLEITUNG
NOTICE D'INSTALLATION

DATE: 10.2.2021

175528

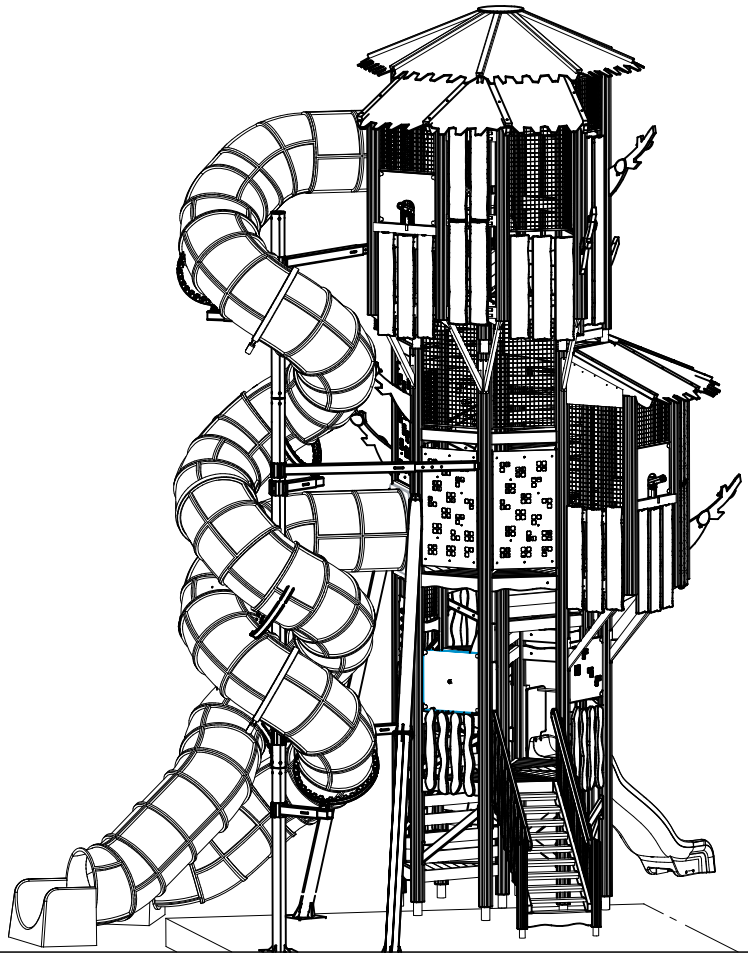

Copyright Lappset Group Ltd

LAPPSET®

FLORA

175528

3

DATE: 10.2.2021

700400	PCS	702286	PCS	702743–707	PCS	703338	PCS	705211	PCS	705230	PCS
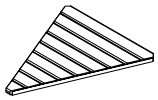	25		1		13	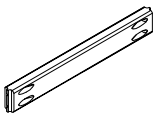	7	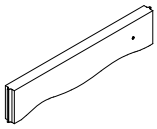	44	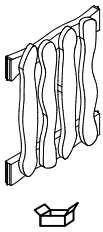	9
		65x65		757x321x15		L 704 H 95		L=724			
706193	PCS	706308–701	PCS	706436–707	PCS	706443	PCS	706453	PCS	706505	PCS
	2	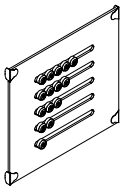	1	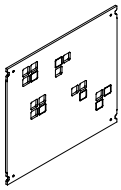	3	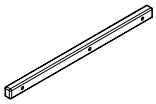	25	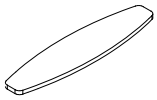	1		2
L=946		10x640x702		10x640x702		32x45x702		15x145x600		35x70x730	
706508	PCS	706531	PCS	706534	PCS	706560–701	PCS	706561–701	PCS	706766–701	PCS
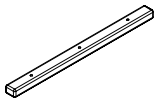	16	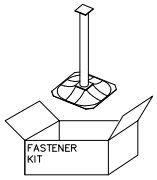	2	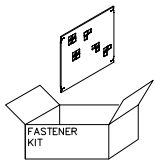	5	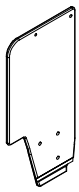	1	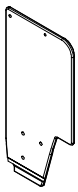	1	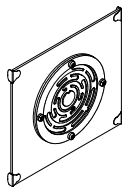	1
32x45x650						15x765x370		15x765x370			
706778	PCS	706891	PCS	706980	PCS	707133	PCS	707304	PCS	707446	PCS
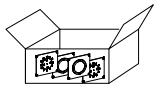	1	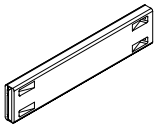	8	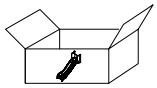	1	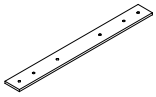	1	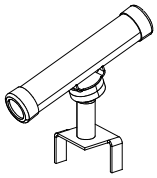	2	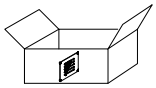	1
		45x145x724		SLIDE 80M		10x80x745					
707515	PCS	707585	PCS	707688–609	PCS	707689	PCS	707691–707	PCS	707692–707	PCS
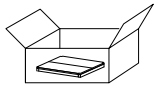	4	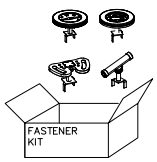	2	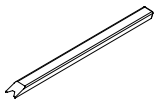	8		8	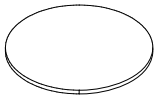	1	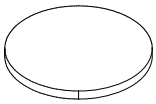	1
				45x70x1385		45x145x1495		15xØ480		15xØ225	
707772–614	PCS	707792	PCS	708370	PCS	708710	PCS	708746	PCS	708856	PCS
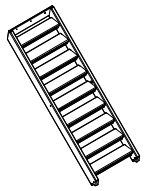	1	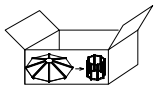	1	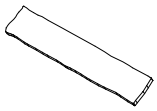	8	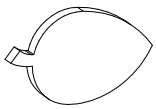	16	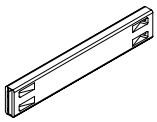	58	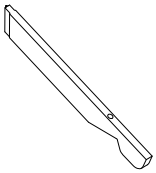	8
700x120x2000				L1120				L 724		45x120x1169	
708861	PCS	708862	PCS	708863	PCS	708865	PCS	708873	PCS	708896	PCS
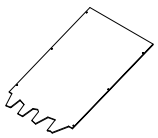	4	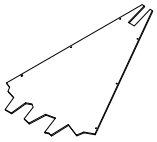	2	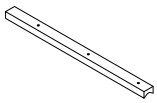	4	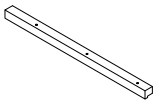	4		25	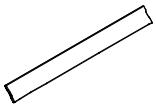	21
								28x200x1100		28x200x2000	

Copyright Lappset Group Ltd

LAPPSET®

FLORA

175528

DATE: 10.2.2021

709046	PCS	900240	PCS	901868	PCS	903093	PCS	903112	PCS	903176	PCS
	8		329		3		862		9		28
		Ø8x70		Ø30x598		Ø8x90		L 750			
903215	PCS	904451	PCS	905051	PCS	905104	PCS	907694−216	PCS	908021	PCS
	14		1		33		280		1		2
		+1470		Ø24/8.4		M10		L 704		3x212x214	
909217	PCS	909230	PCS	909256	PCS	909511	PCS	909519	PCS	909633	PCS
	21		8		42		2		2		42
8x70		8x150		Ø16/8.4		90x90x650		50x380x380		M8	
909743	PCS	909744	PCS	909850	PCS	910517−216	PCS	980100	PCS	980101	PCS
	10		6		42		8		402		200
705x612		705x1212		M8x25				Ø5x60		Ø4.5x70	
980102	PCS	980104	PCS	980111	PCS	980114	PCS	980123	PCS	980128	PCS
	12		24		32		4		68		243
5x40		5x70		Ø4x40		Ø4x20		Ø7x60		7x40	
980131	PCS	A10196	PCS	A10197	PCS	A10259	PCS	P06520	PCS	P07312	PCS
	4		1		1		1		7		9
Ø6x60								45x95x778		L150	
P08265	PCS	P10068	PCS	P10089	PCS	P12422	PCS	P12423	PCS	P12425	PCS
	2		75		50		6		2		8
8x550x702		45x120x970		32x45x750		45x120x539				15x398x795	

Copyright Lappset Group Ltd

LAPPSET®

FLORA

175528

DATE: 10.2.2021

P12427	PCS	P12430	PCS	P13093	PCS	P13096	PCS	P13098	PCS	P13528	PCS
	6		8		4		8		4		1
32x45x400		10x1078x1445		45x145x724		140x140x2115				8x360x960	
P13660−707	PCS	P14006	PCS	P14018	PCS	P14021	PCS	P14023	PCS	P14024	PCS
	9		7		9		6		9		1
10x230x700				L 5900		L 696 H 95		L 2851		15x321x857	
P14468	PCS	P14490−704	PCS	P14490−707	PCS	P14513	PCS	P14519	PCS	P14540	PCS
	2		4		1		2		9		1
200x200x2598		704x1280		704x1280		350x350x2545					
Q81172	PCS		PCS		PCS		PCS		PCS		PCS
	1										
	PCS		PCS		PCS		PCS		PCS		PCS
	PCS		PCS		PCS		PCS		PCS		PCS
	PCS		PCS		PCS		PCS		PCS		PCS

Copyright Lappset Group Ltd

LAPPSET®
FLORA

175528

DATE: 12.1.2022

4

EN/AS Impact Area 46.7 m2

1:75
0 3

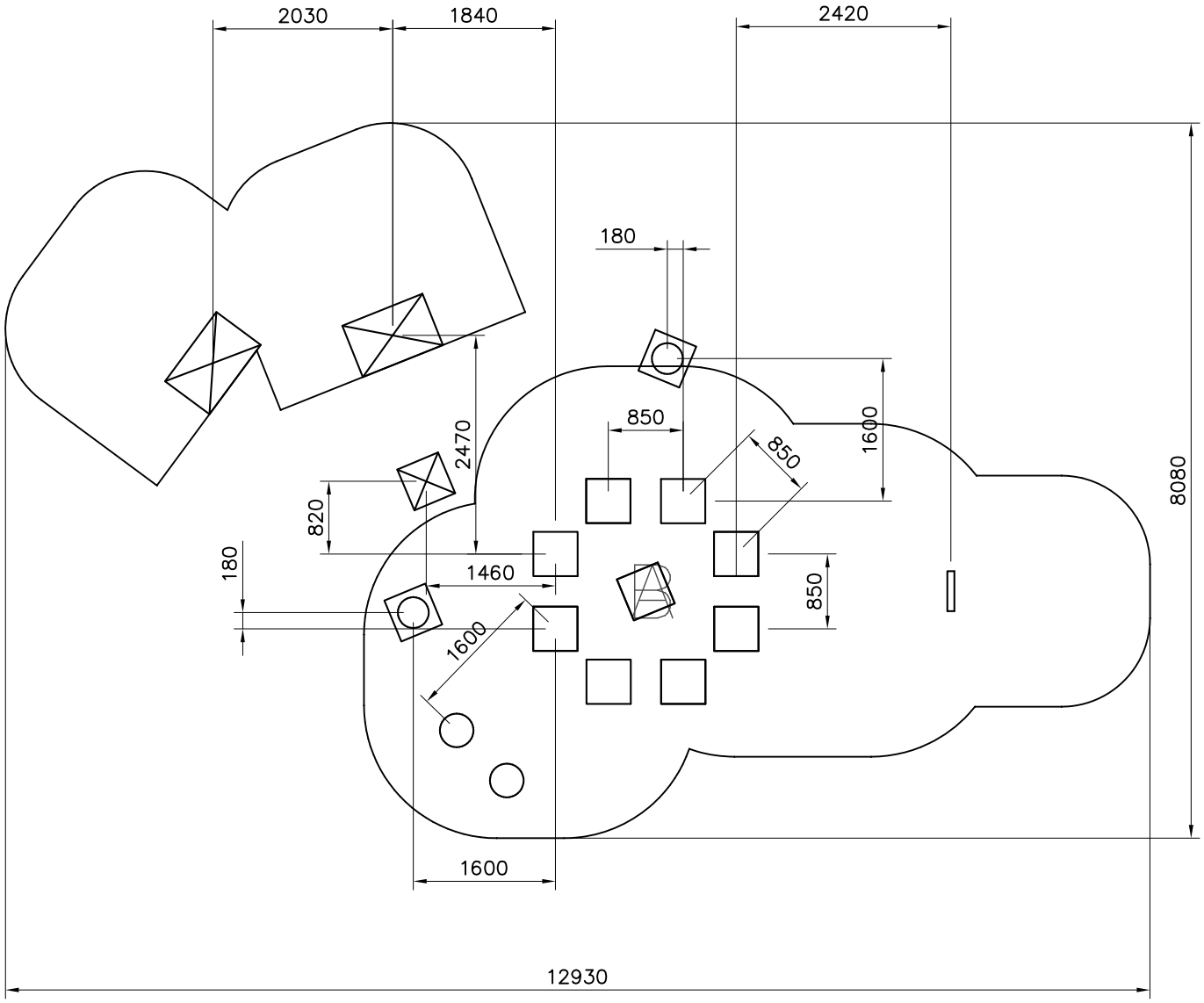

Copyright Lappset Group Ltd

LAPPSET®
FLORA

175528

DATE: 10.2.2021

4A

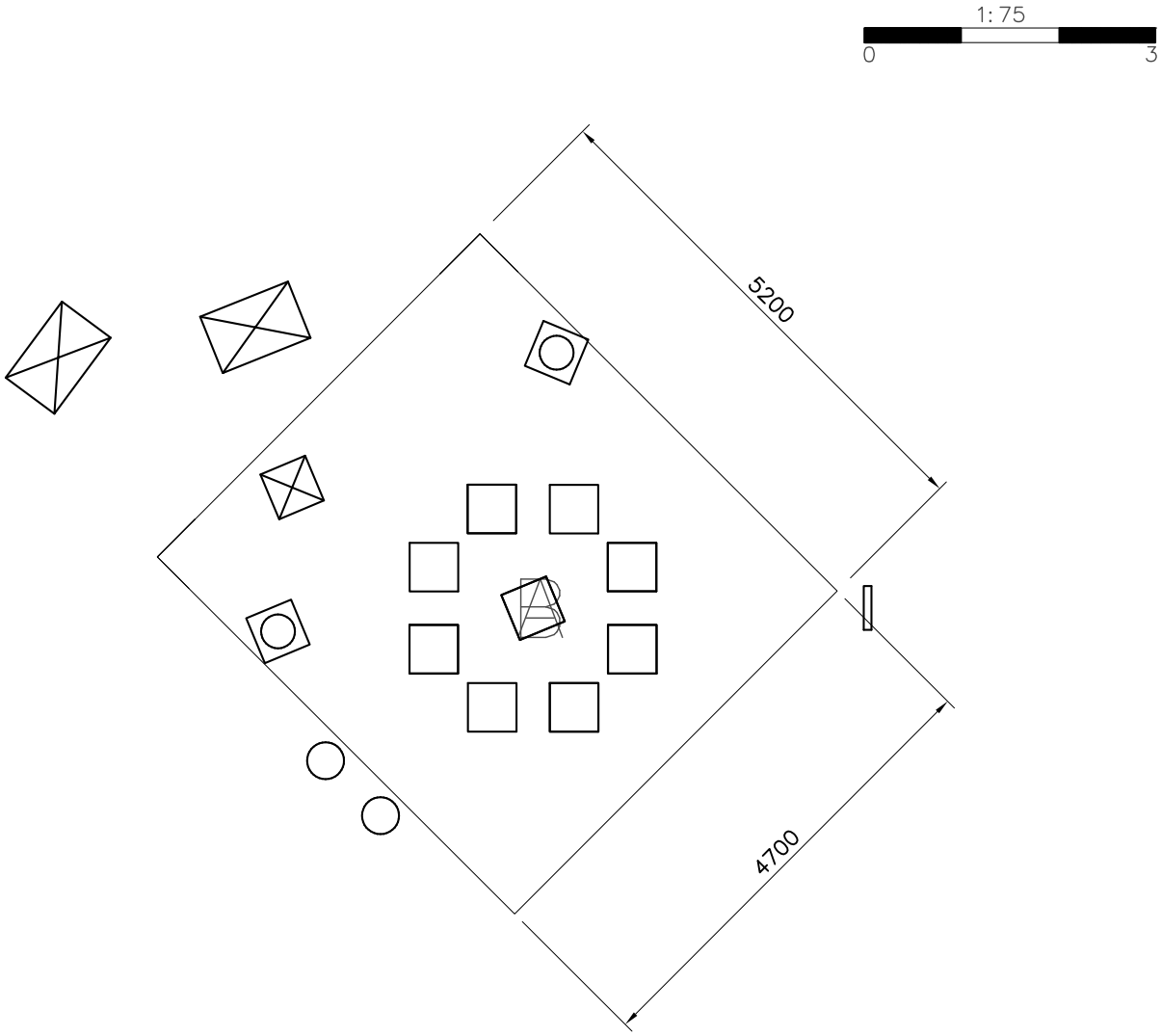

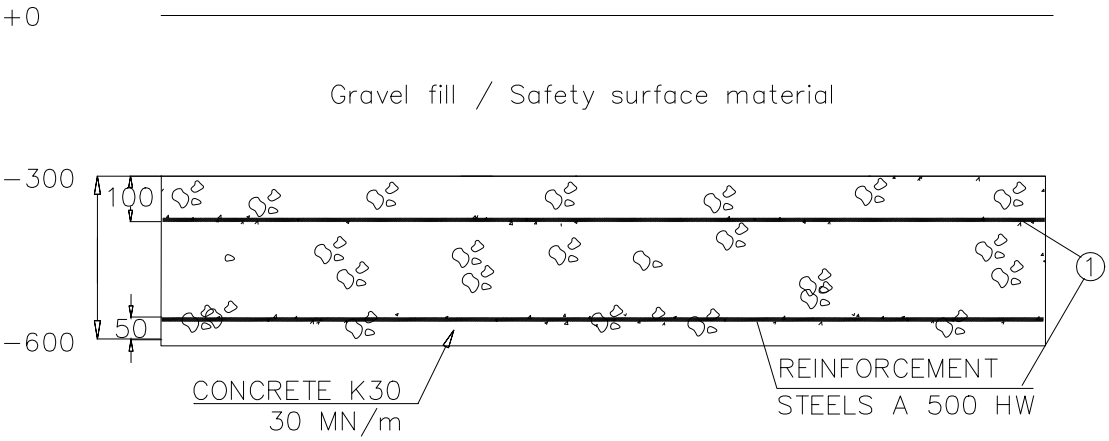

1 STEELNET ø8 #150

Copyright Lappset Group Ltd

LAPPSET®

FLORA

175528

DATE: 7.10.2021

4A_1

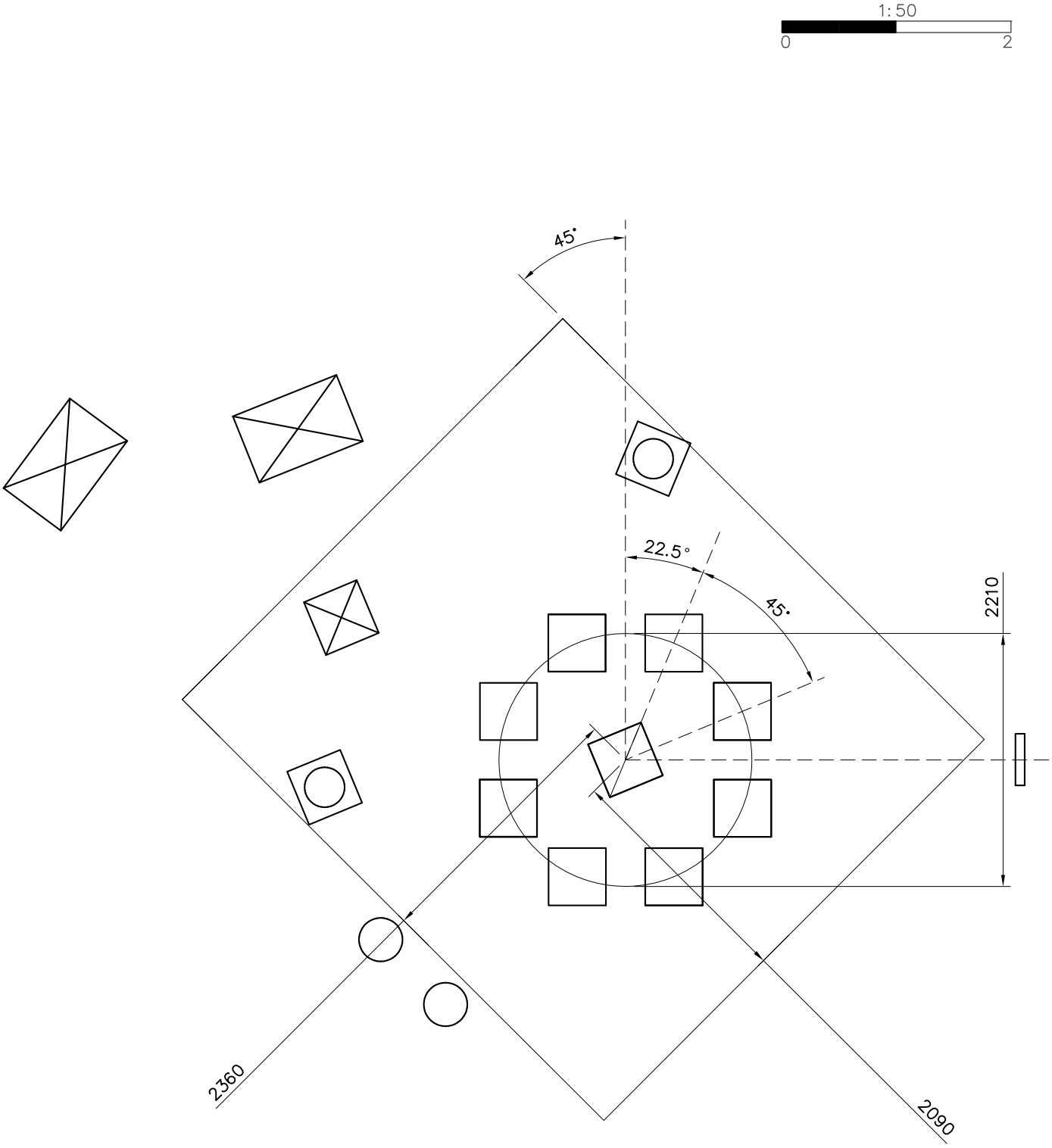

Copyright Lappset Group Ltd

LAPPSET®
FLORA

175528

DATE: 10.2.2021

4B

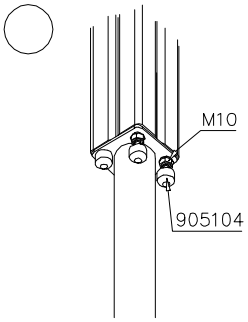

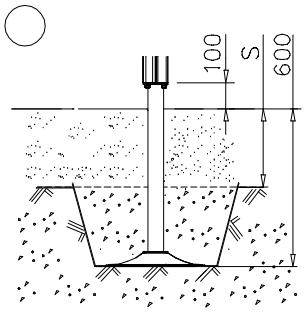

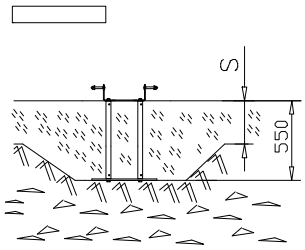

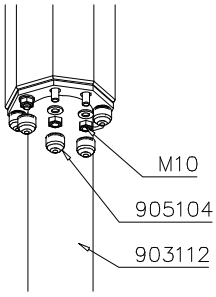

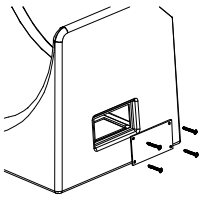

Access– and maintenance panel.
Asennus– ja huolto luukku.

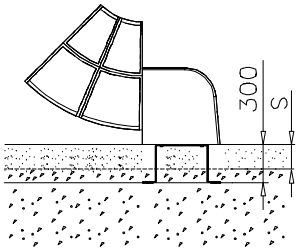

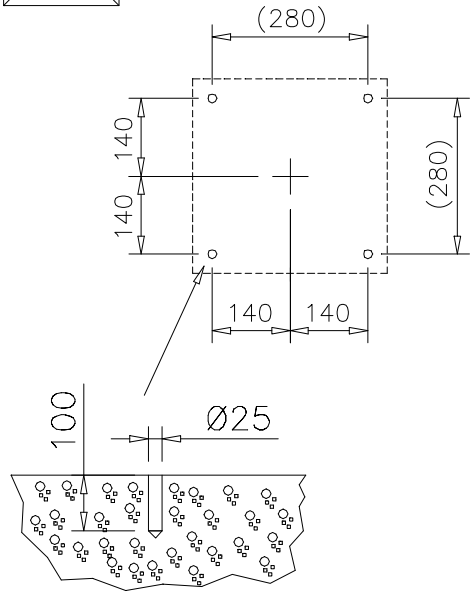

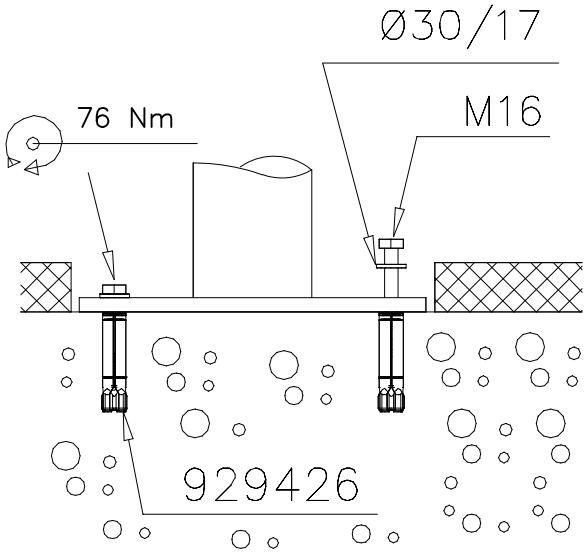

Copyright Lappset Group Ltd

LAPPSET®
FLORA

175528

DATE: 10.2.2021

4C

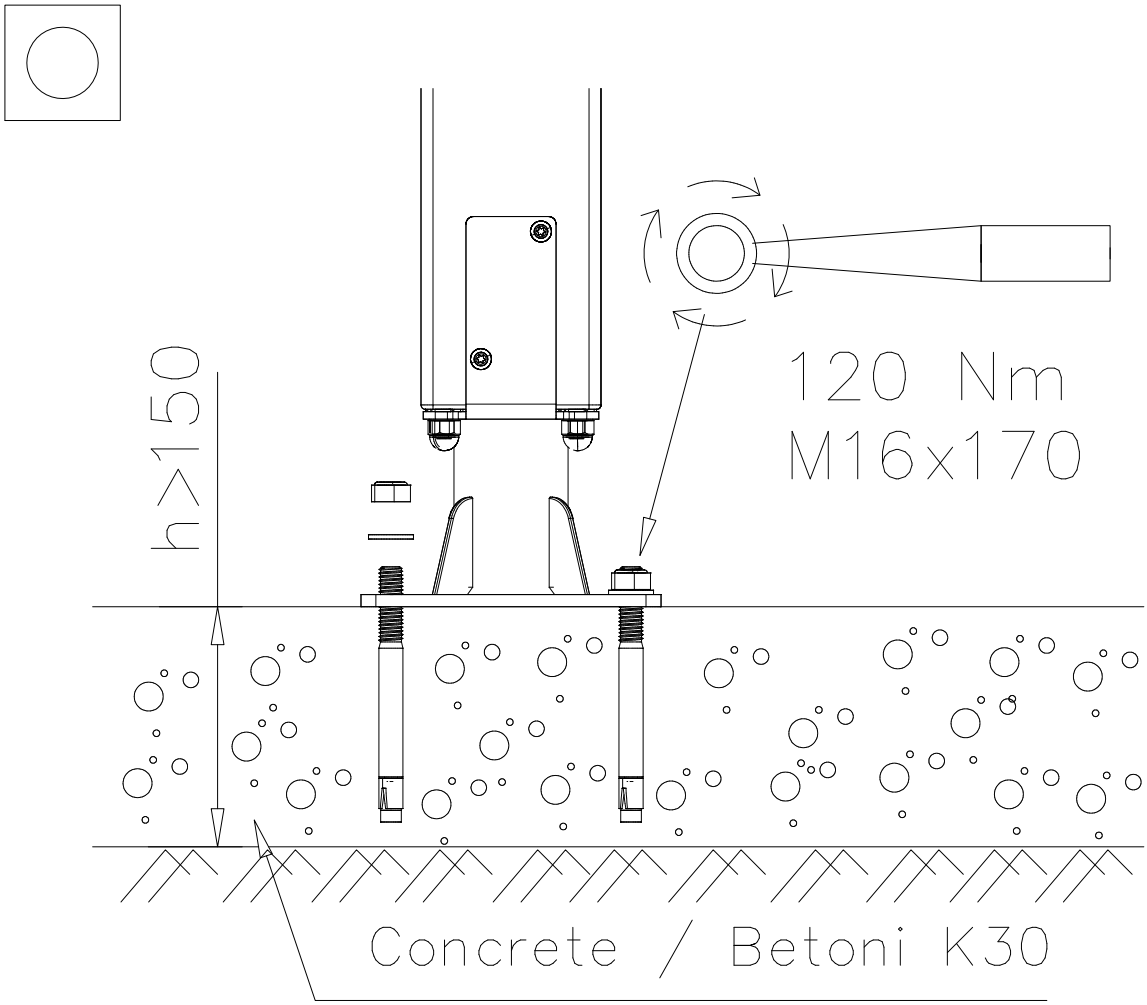

Copyright Lappset Group Ltd

LAPPSET®
FLORA

175528

DATE: **10.2.2021**

4D

CONCRETE BLOCK SOLUTION

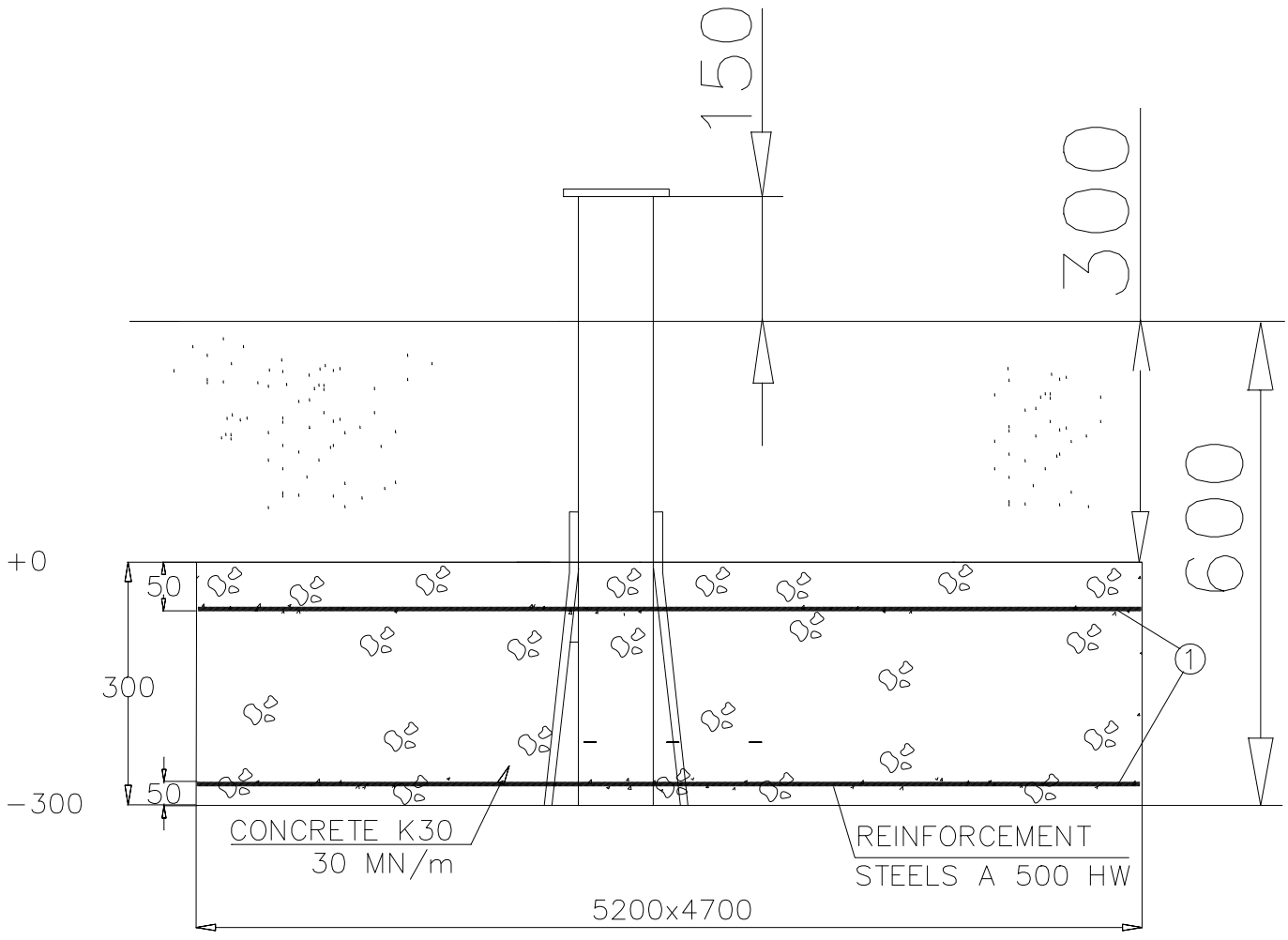

1 STEELNET ø8 #150 (5100x4600)

Copyright Lappset Group Ltd

LAPPSET®
FLORA

175528

DATE: 12.1.2022

EN/AS Impact Area 46.7 m2
Falling Space 49.9 m2
Max Falling Height 1470 mm

1:75
0 3

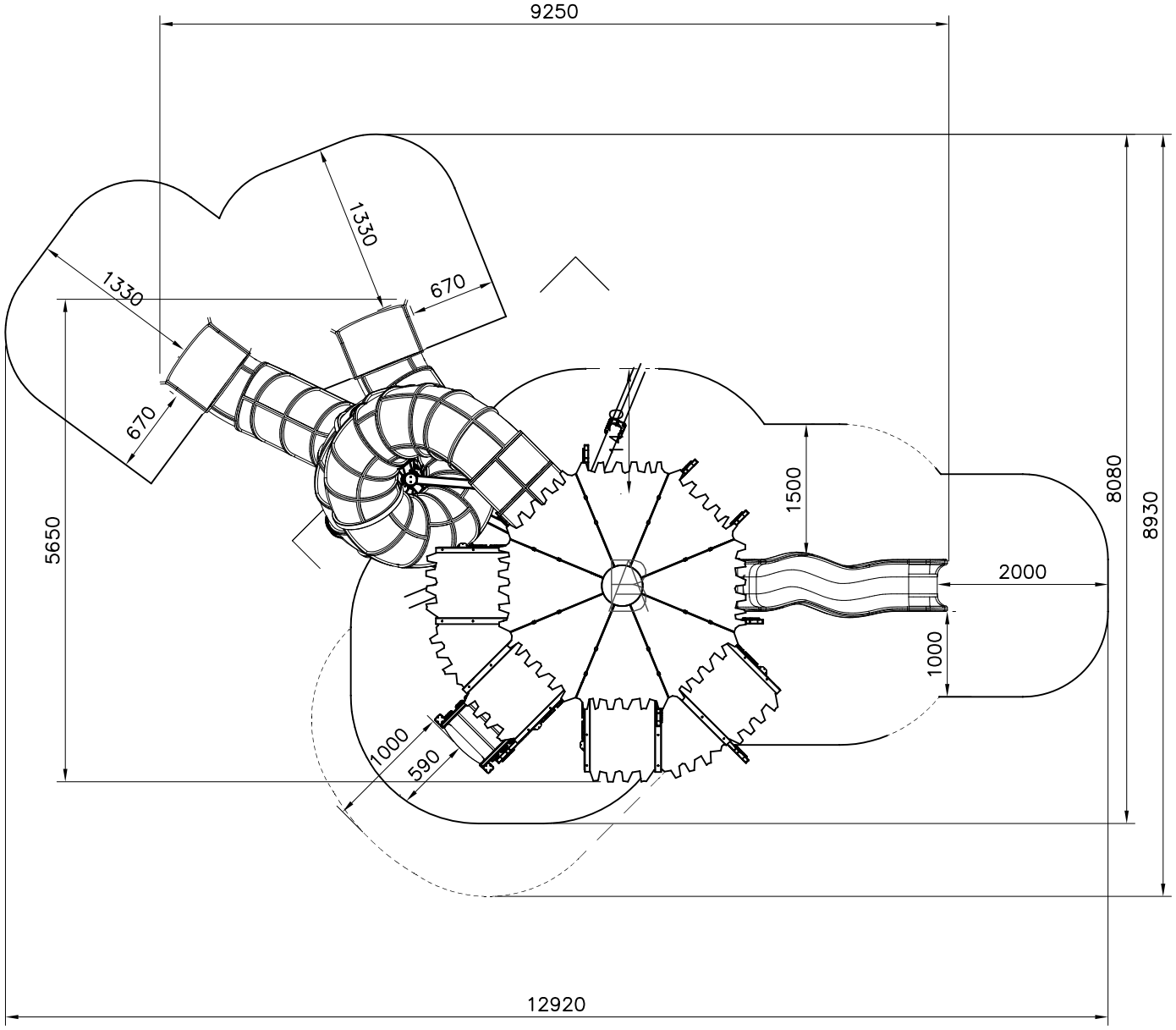

Copyright Lappset Group Ltd

LAPPSET®

FLORA

175528

DATE: 10.2.2021

5A

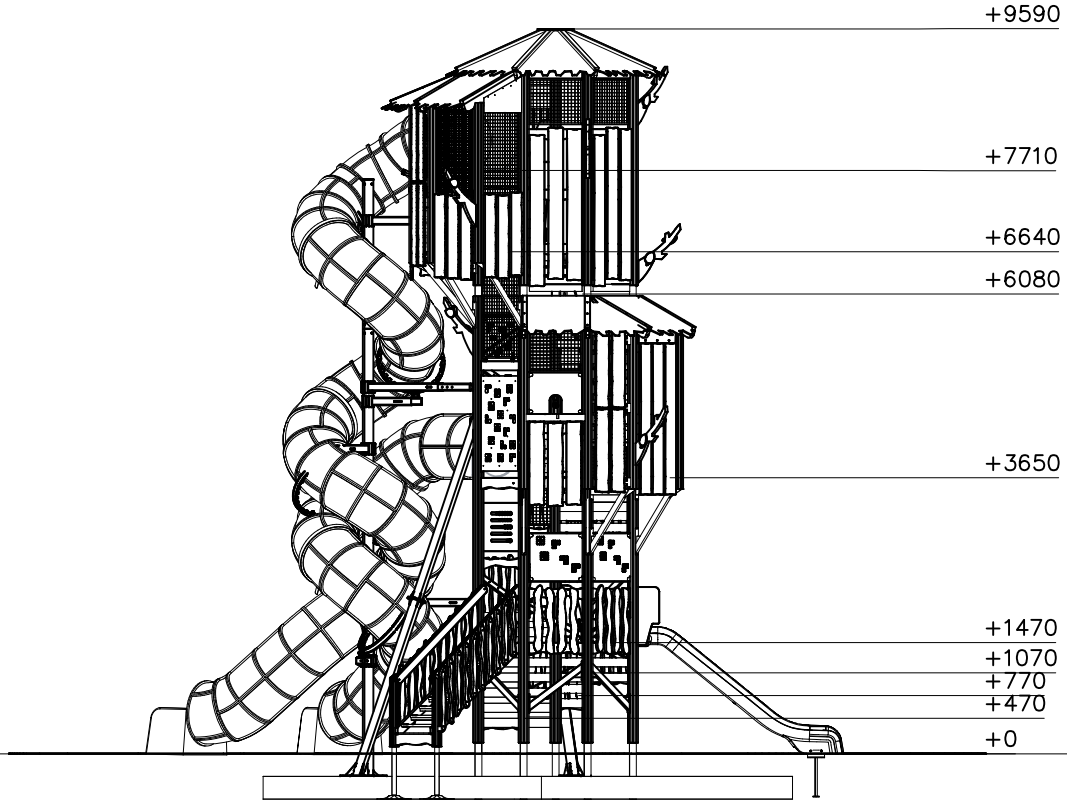

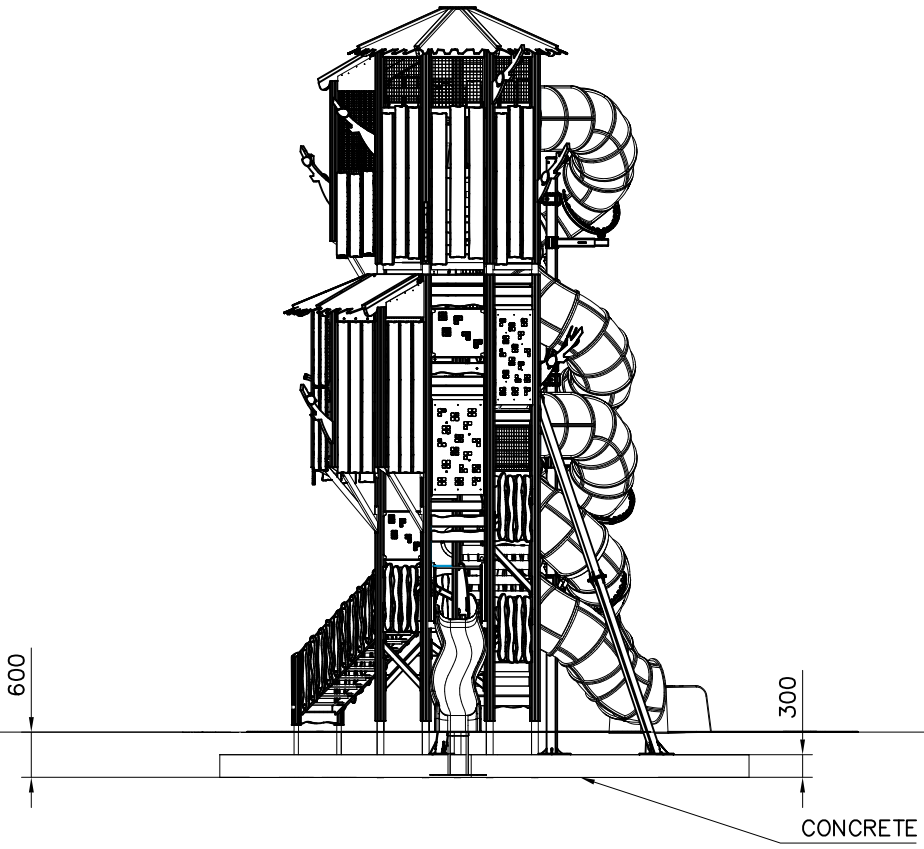

Copyright Lappset Group Ltd

LAPPSET®
FLORA

175528

DATE: 10.2.2021

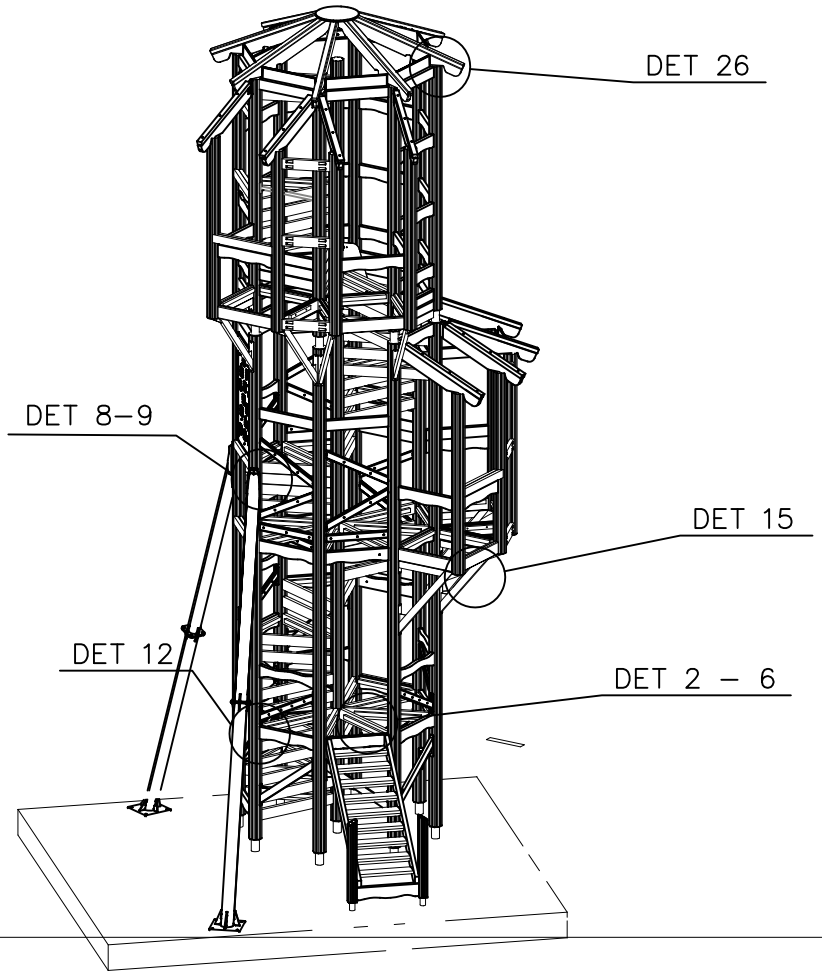

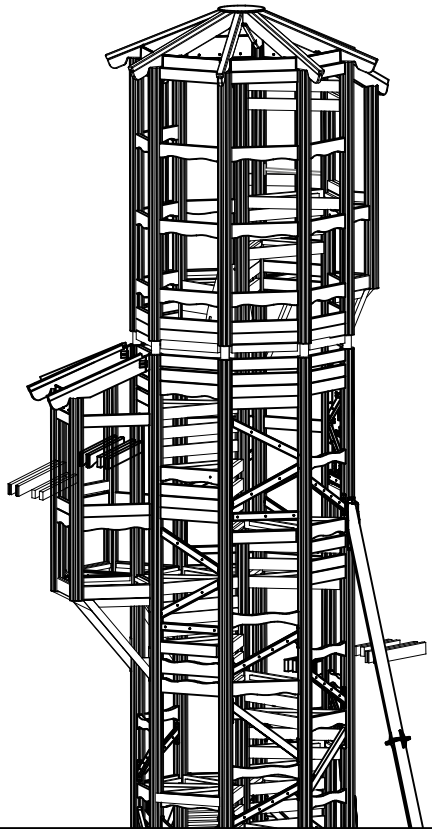

Copyright Lappset Group Ltd

LAPPSET®

FLORA

175528

DATE: 10.2.2021

6A

DET 1

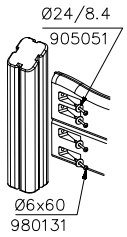

DET 2

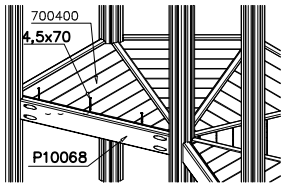

DET 3

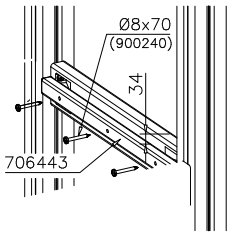

DET 4

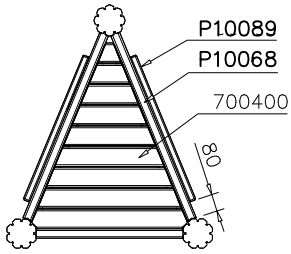

DET 5

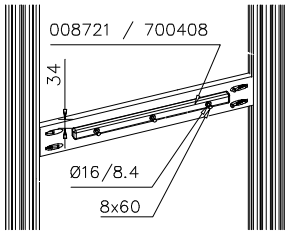

DET 6

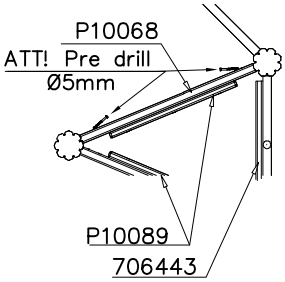

DET 7

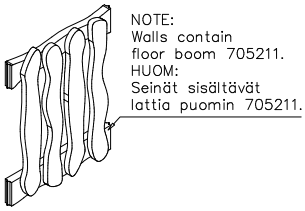

DET 8

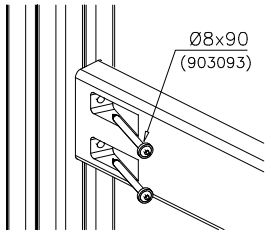

DET 9

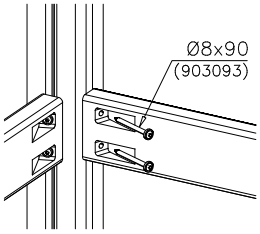

DET 10

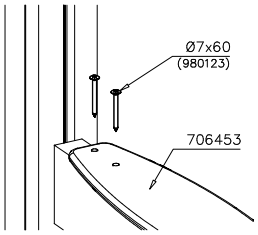

DET 11

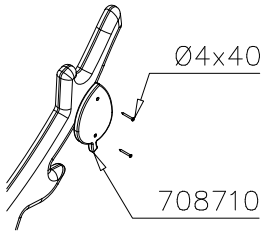

DET 12

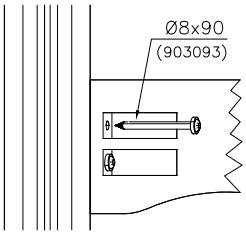

DET 13

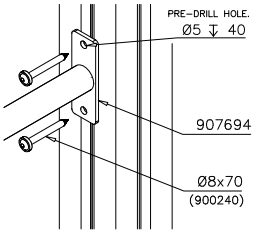

DET 14

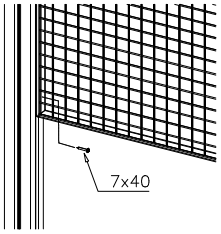

DET 15

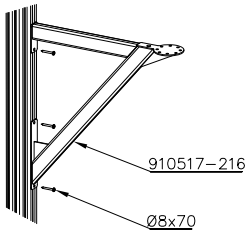

DET 16

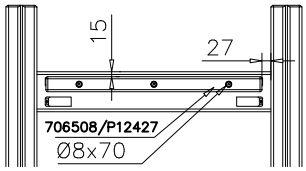

DET 17

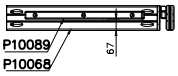

DET 18

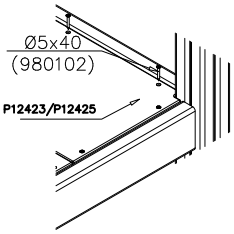

DET 19

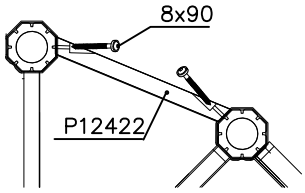

DET 20

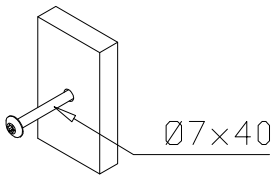

Copyright Lappset Group Ltd

LAPPSET®
FLORA

175528

DATE: 10.2.2021

6B

DET 21

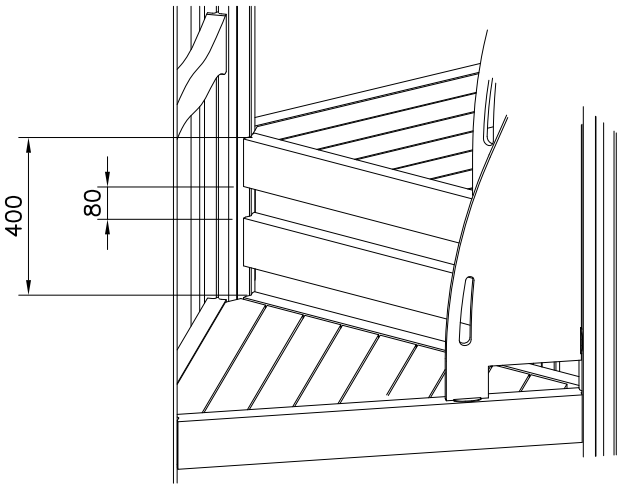

DET 22

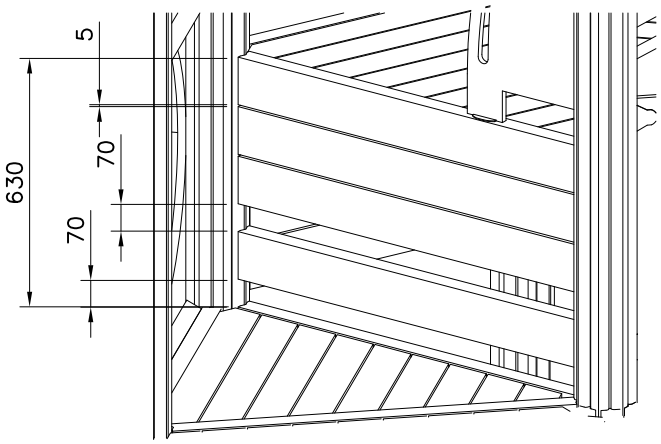

DET 23

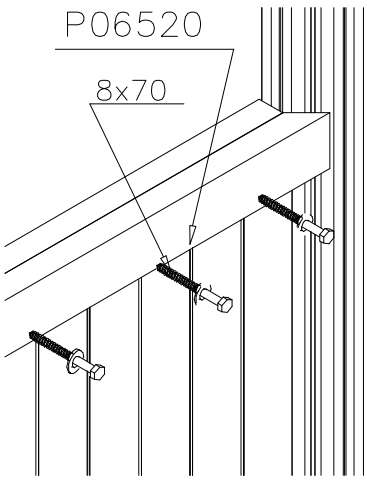

DET 24

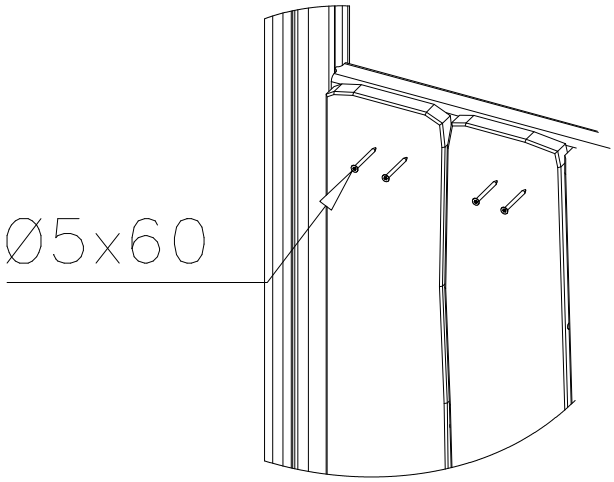

DET 25

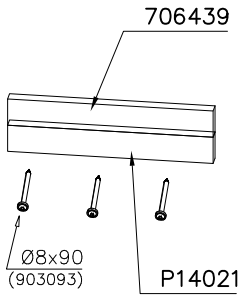

DET 26

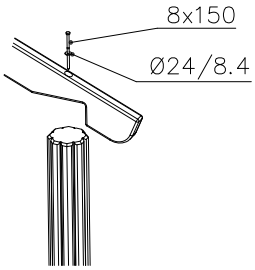

DET 27

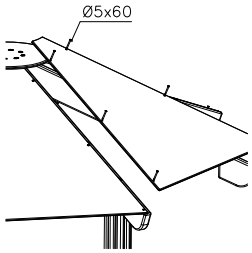

DET 28

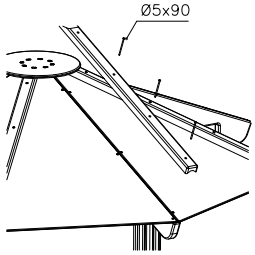

Copyright Lappset Group Ltd

LAPPSET®
FLORA

175528

DATE: 10.2.2021

6C

DET 29

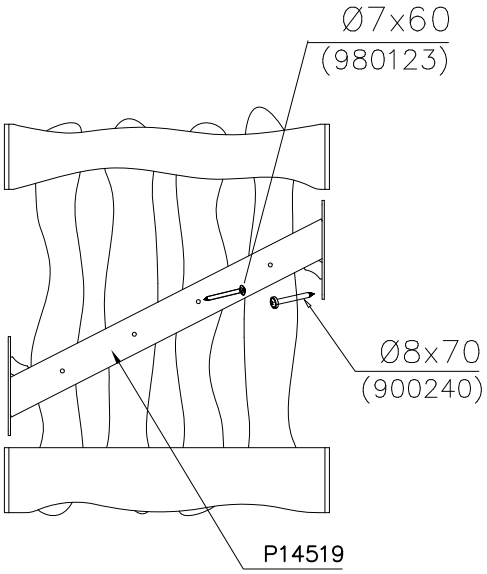

DET 30

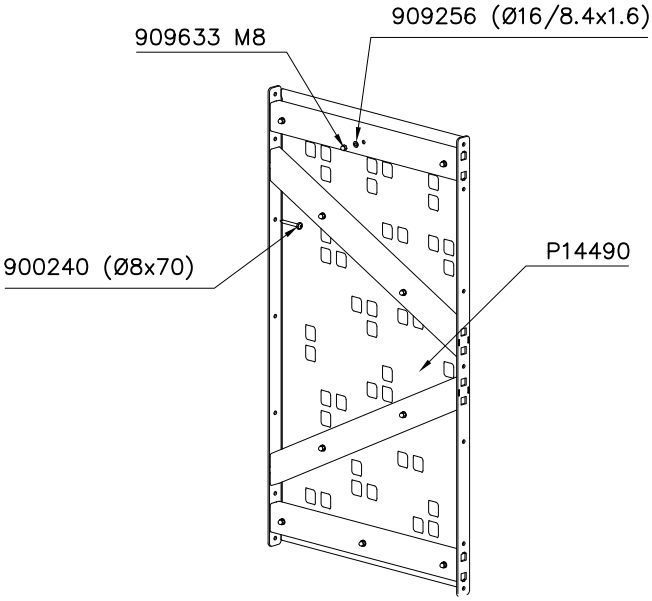

DET 31

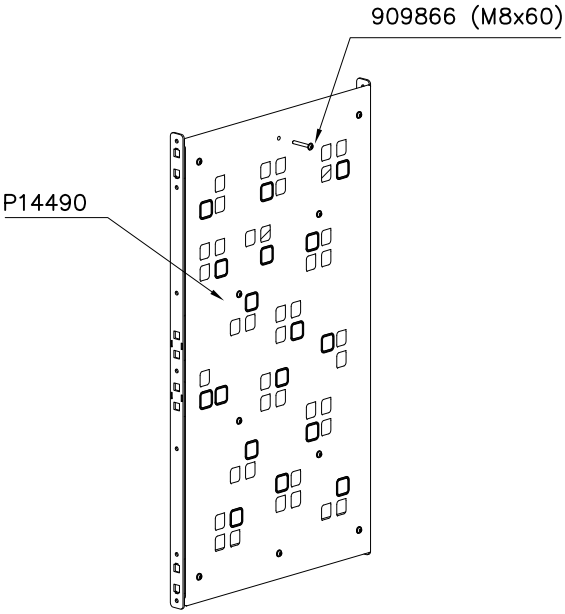

Copyright Lappset Group Ltd

LAPPSET®
FLORA

175528

DATE: 10.2.2021

6D

DET 32

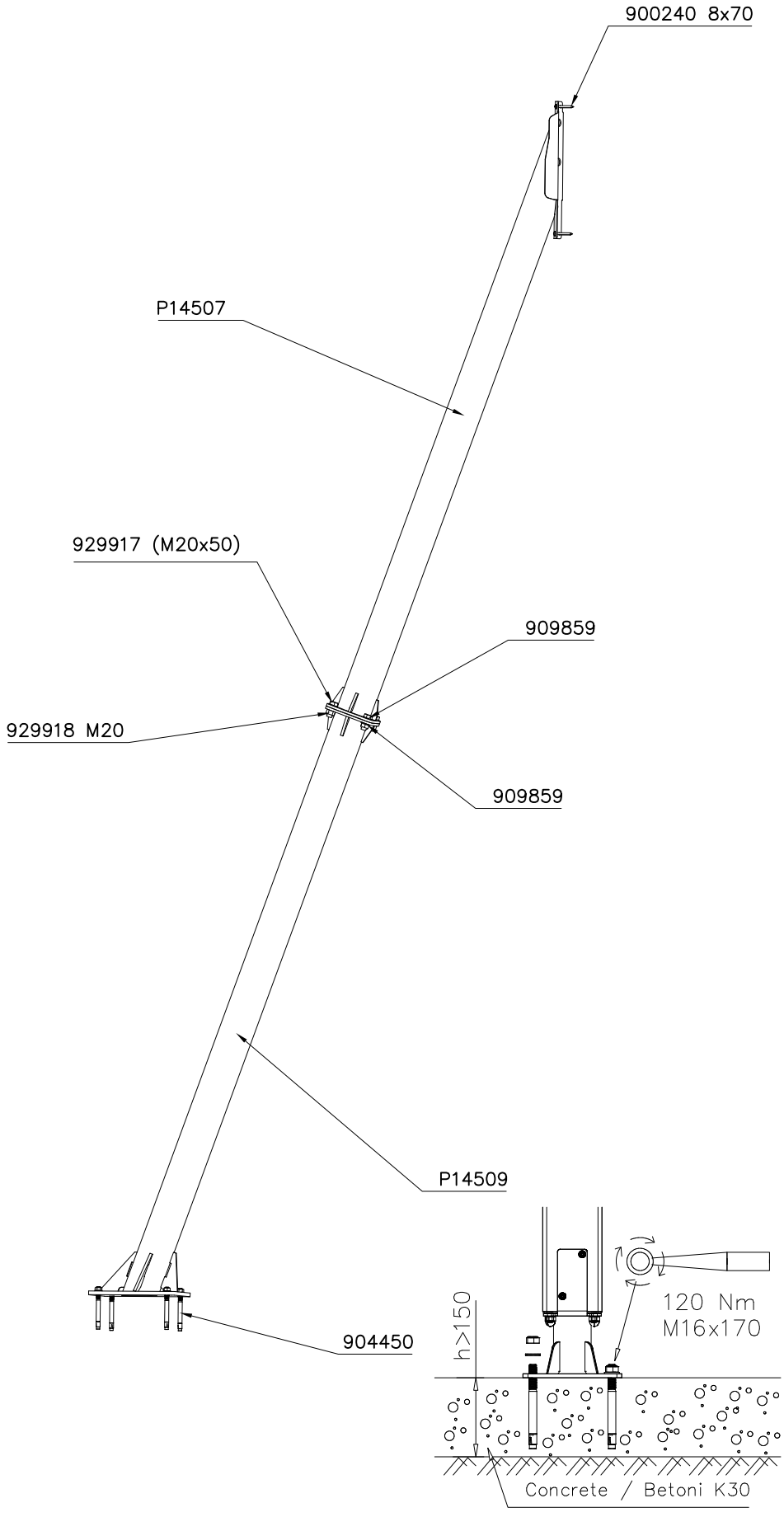

929917

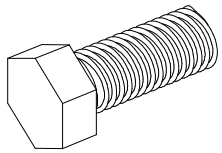

909859

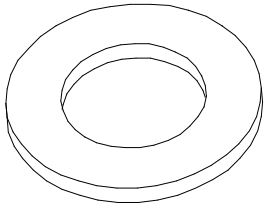

929918

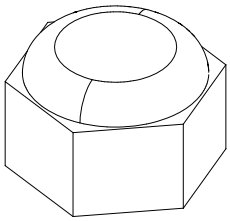

904450

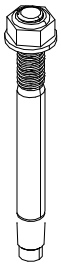

Copyright Lappset Group Ltd

LAPPSET®

FLORA

175528

DATE: 10.2.2021

TOWER A

7

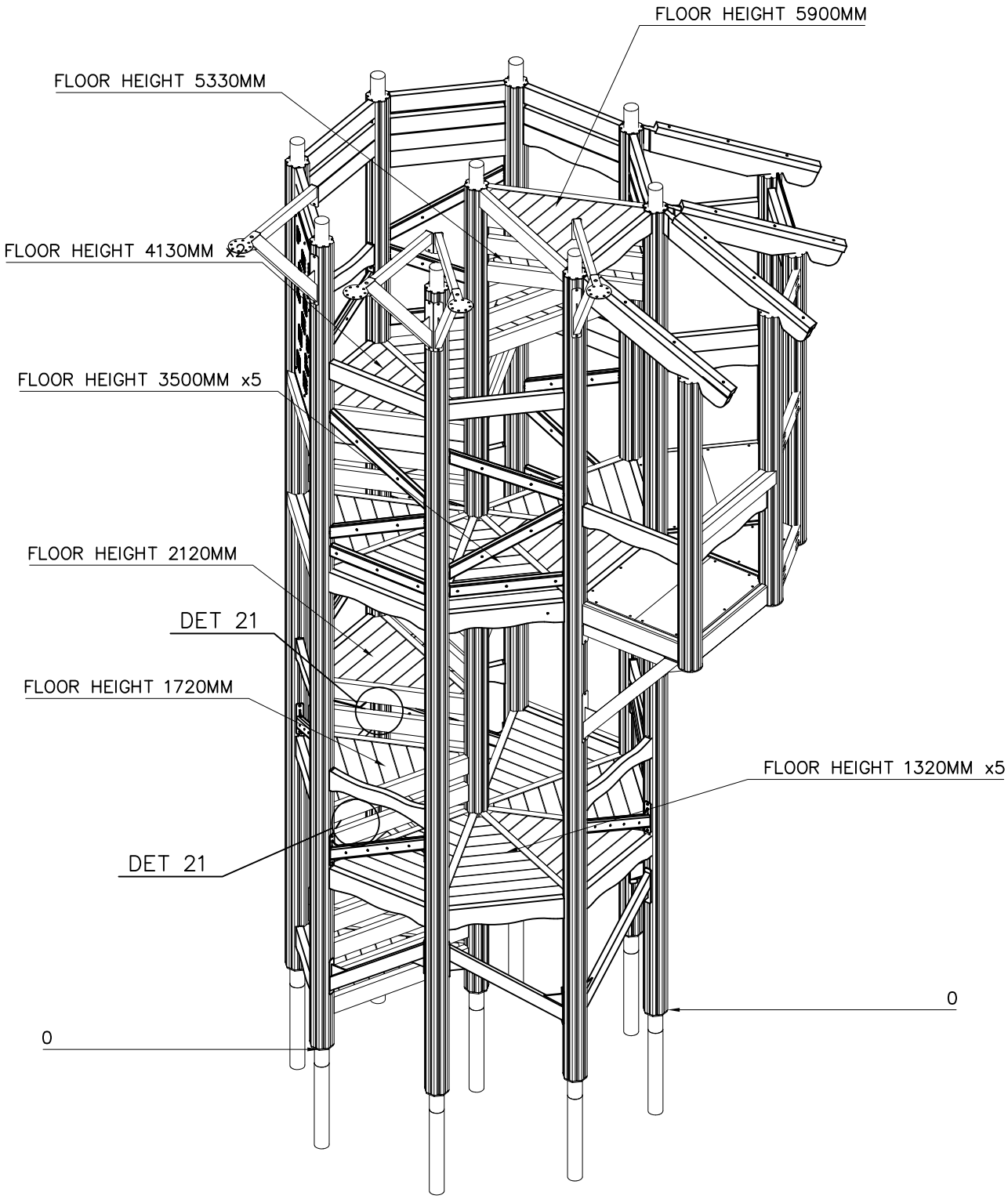

Copyright Lappset Group Ltd

LAPPSET®
FLORA

175528

DATE: 10.2.2021

TOWER A1

7

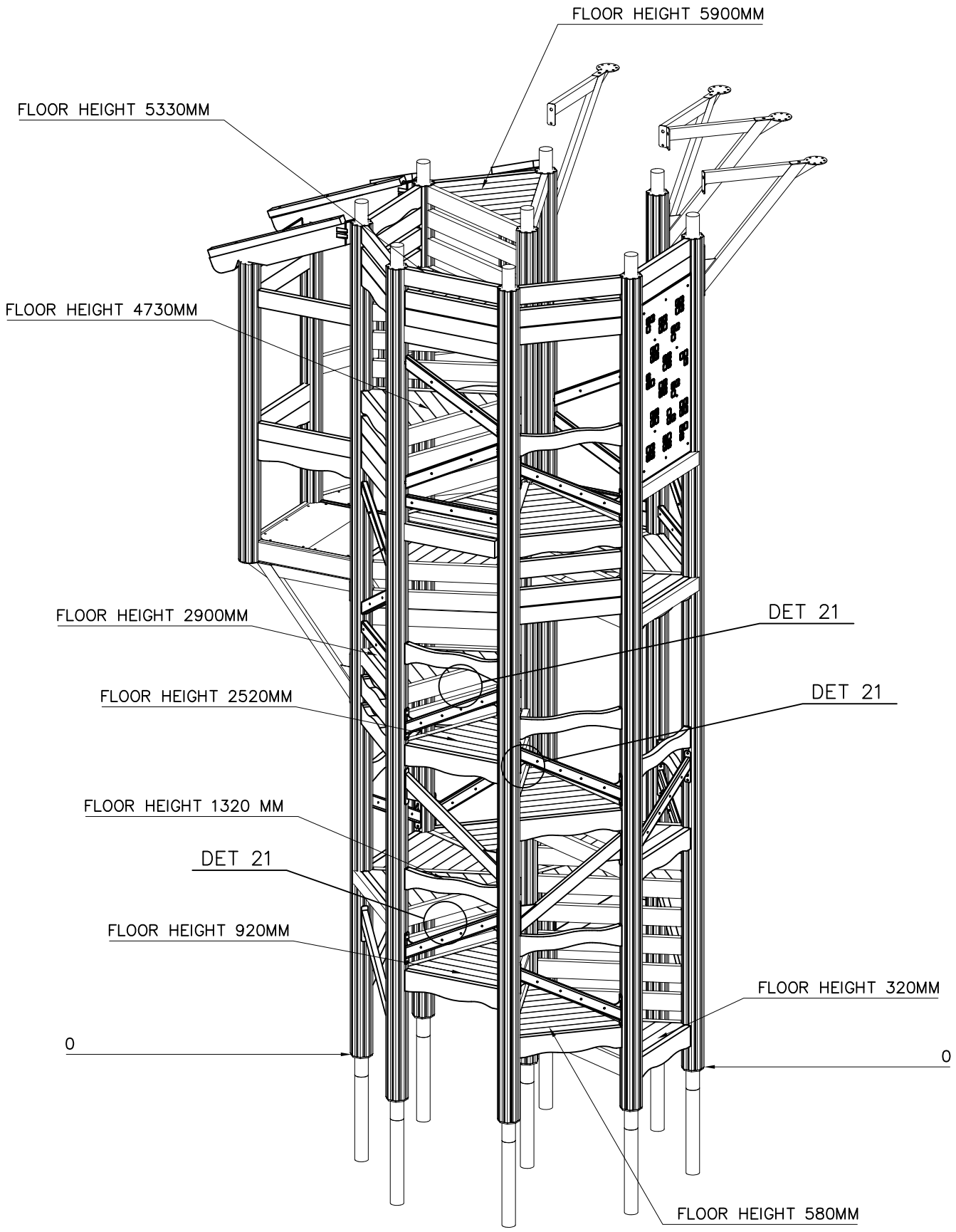

Copyright Lappset Group Ltd

LAPPSET®
FLORA

175528

DATE: 10.2.2021

TOWER A2

7

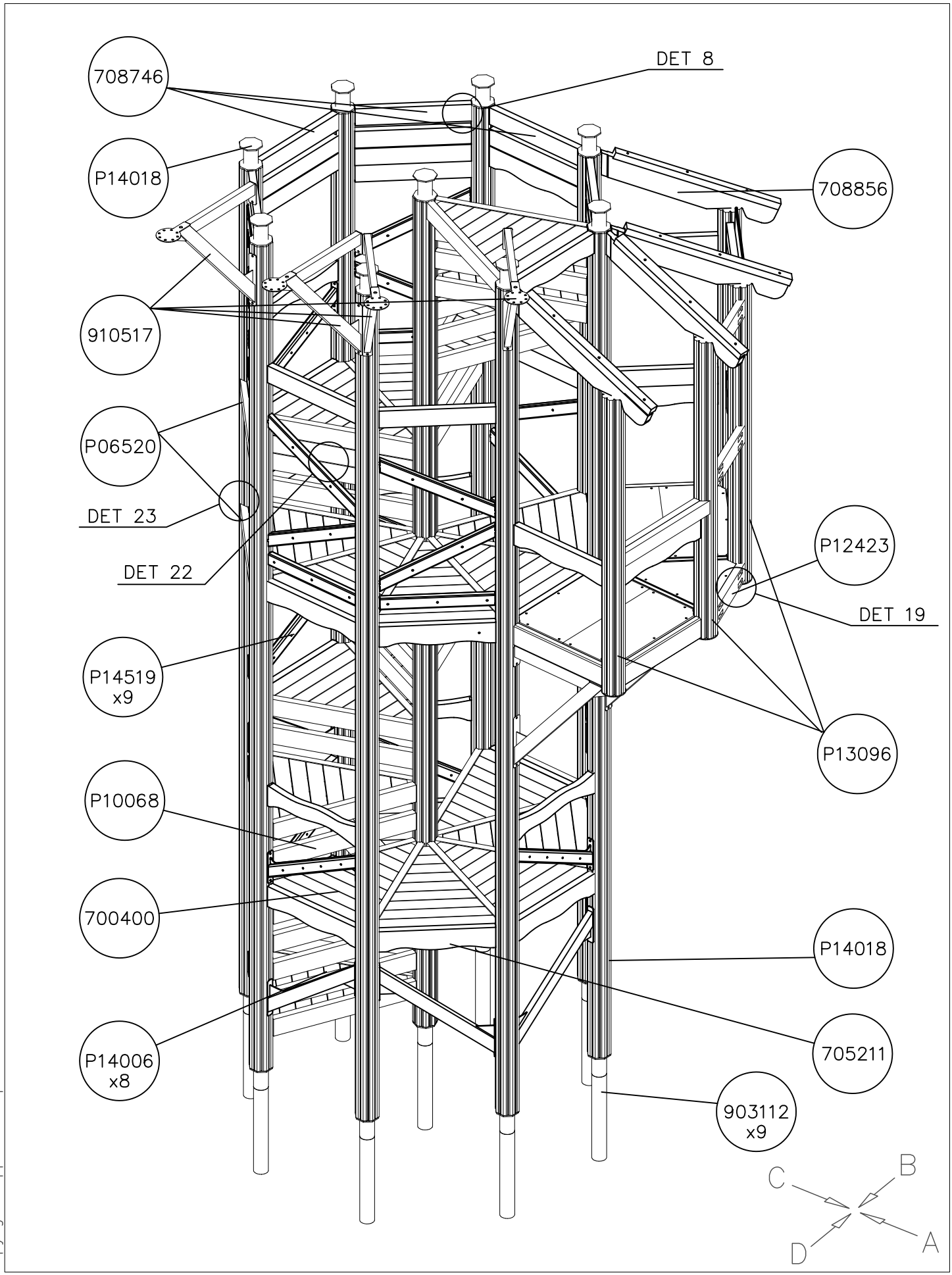

Copyright Lappset Group Ltd

LAPPSET®

FLORA

175528

DATE: 10.2.2021

TOWER A4

7a

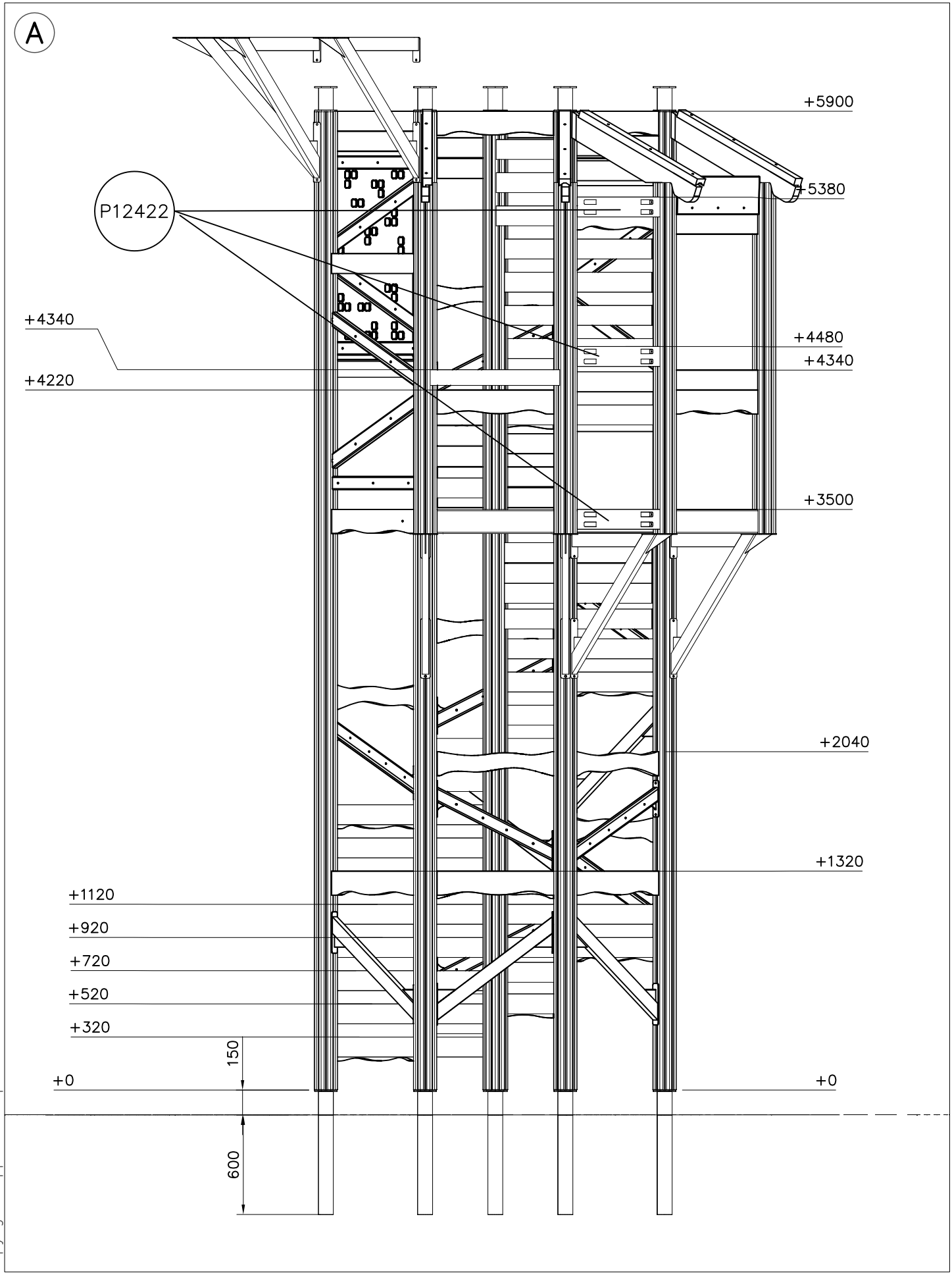

Copyright Lappset Group Ltd

LAPPSET®
FLORA

175528

DATE: 10.2.2021

TOWER A3

7

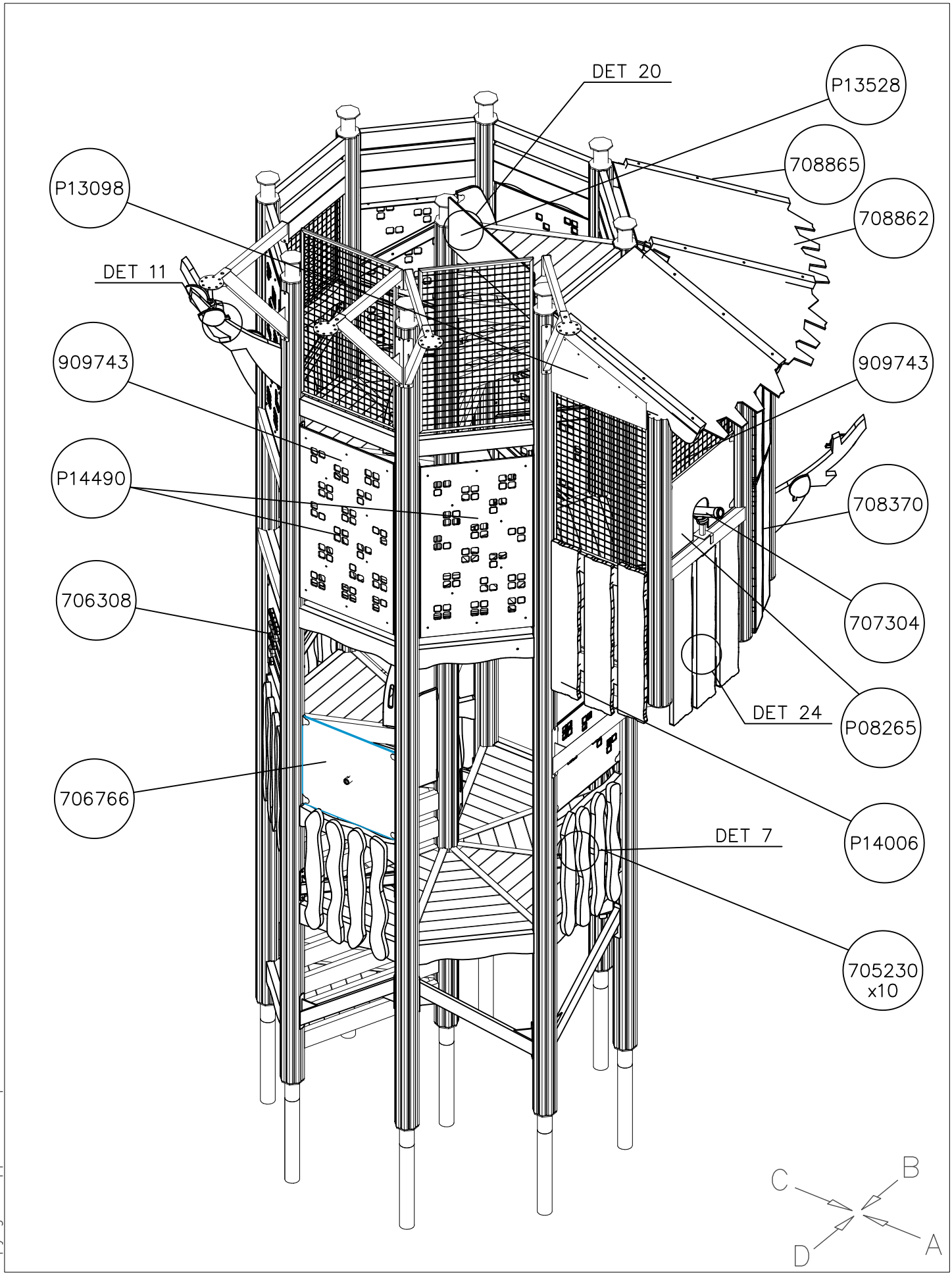

Copyright Lappset Group Ltd

LAPPSET®
FLORA

175528

TOWER A4
7a

DATE: 10.2.2021

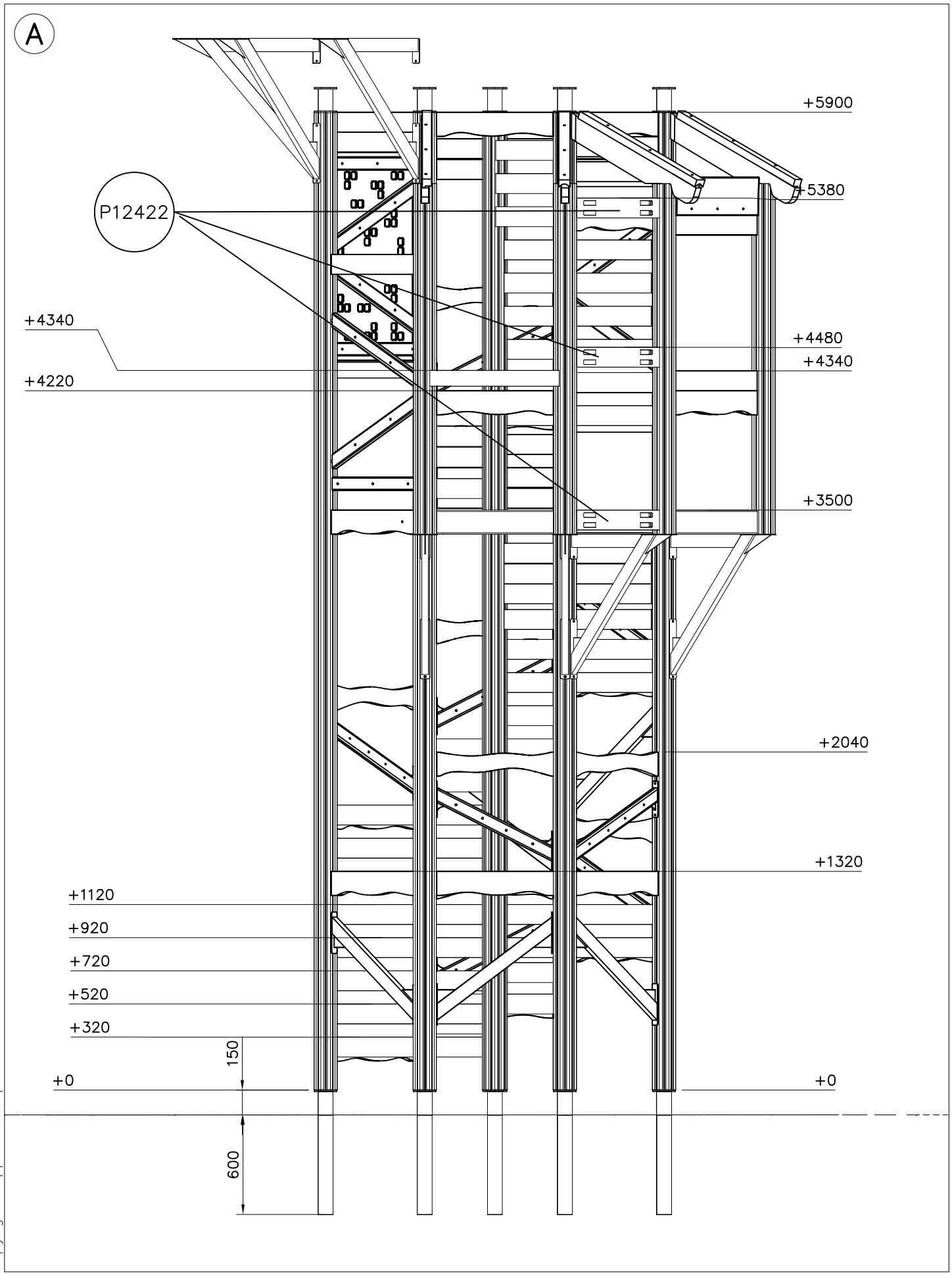

Copyright Lappset Group Ltd

LAPPSET®
FLORA

175528

DATE: 10.2.2021

TOWER A5
7a

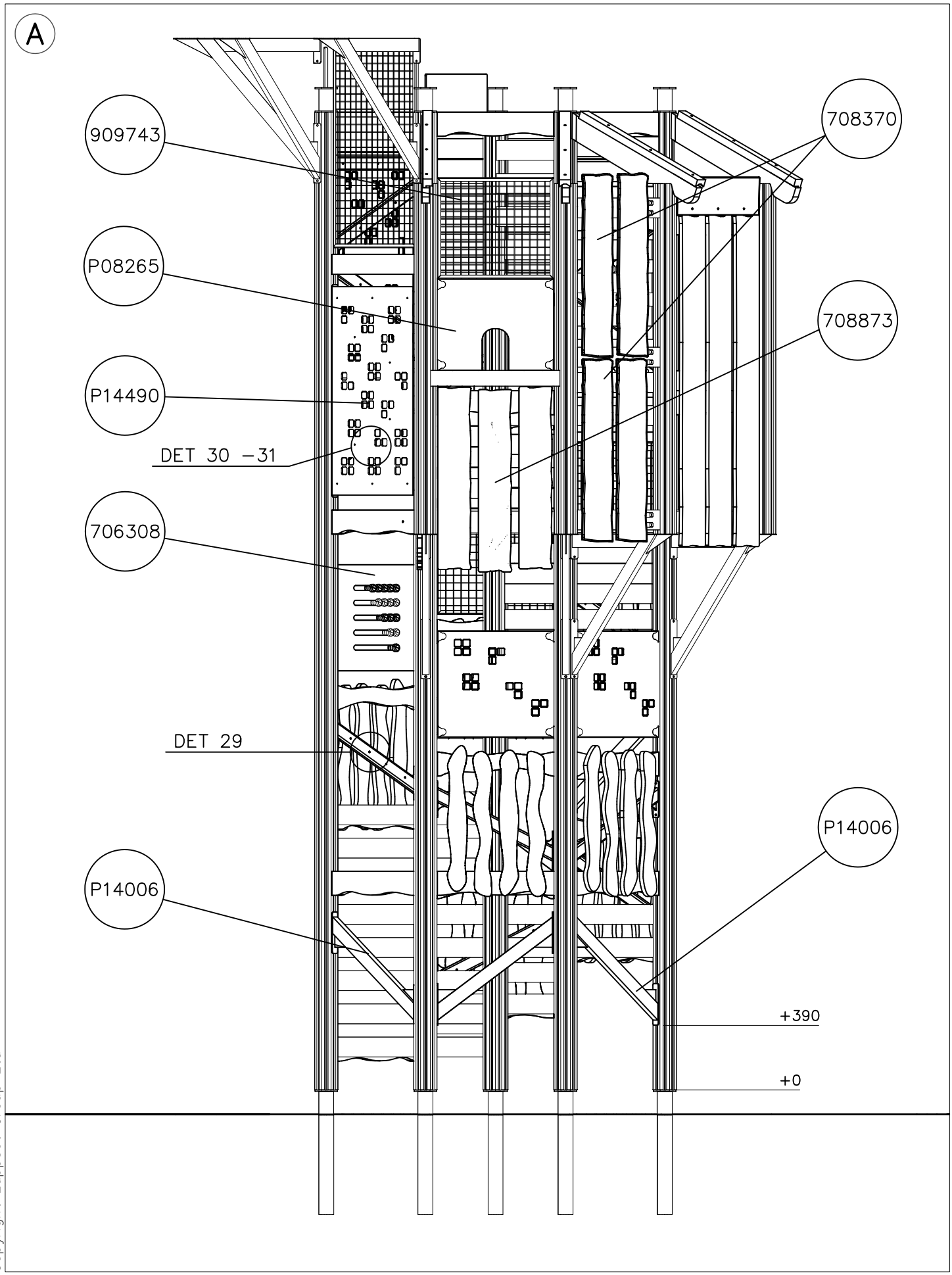

Copyright Lappset Group Ltd

LAPPSET®
FLORA

175528

TOWER A6
7a

DATE: 10.2.2021

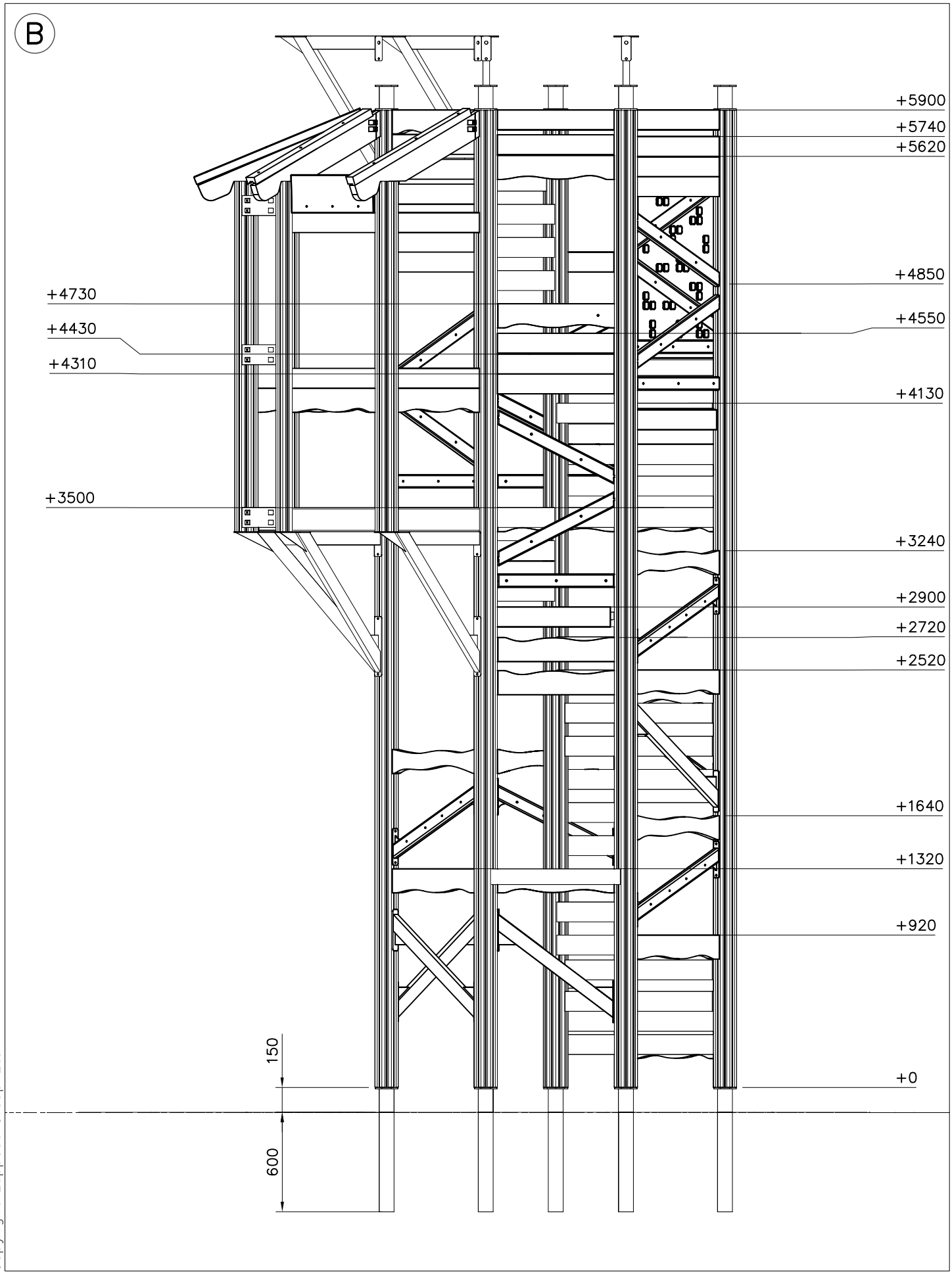

Copyright Lappset Group Ltd

LAPPSET®
FLORA

175528

DATE: 10.2.2021

TOWER A7
7a

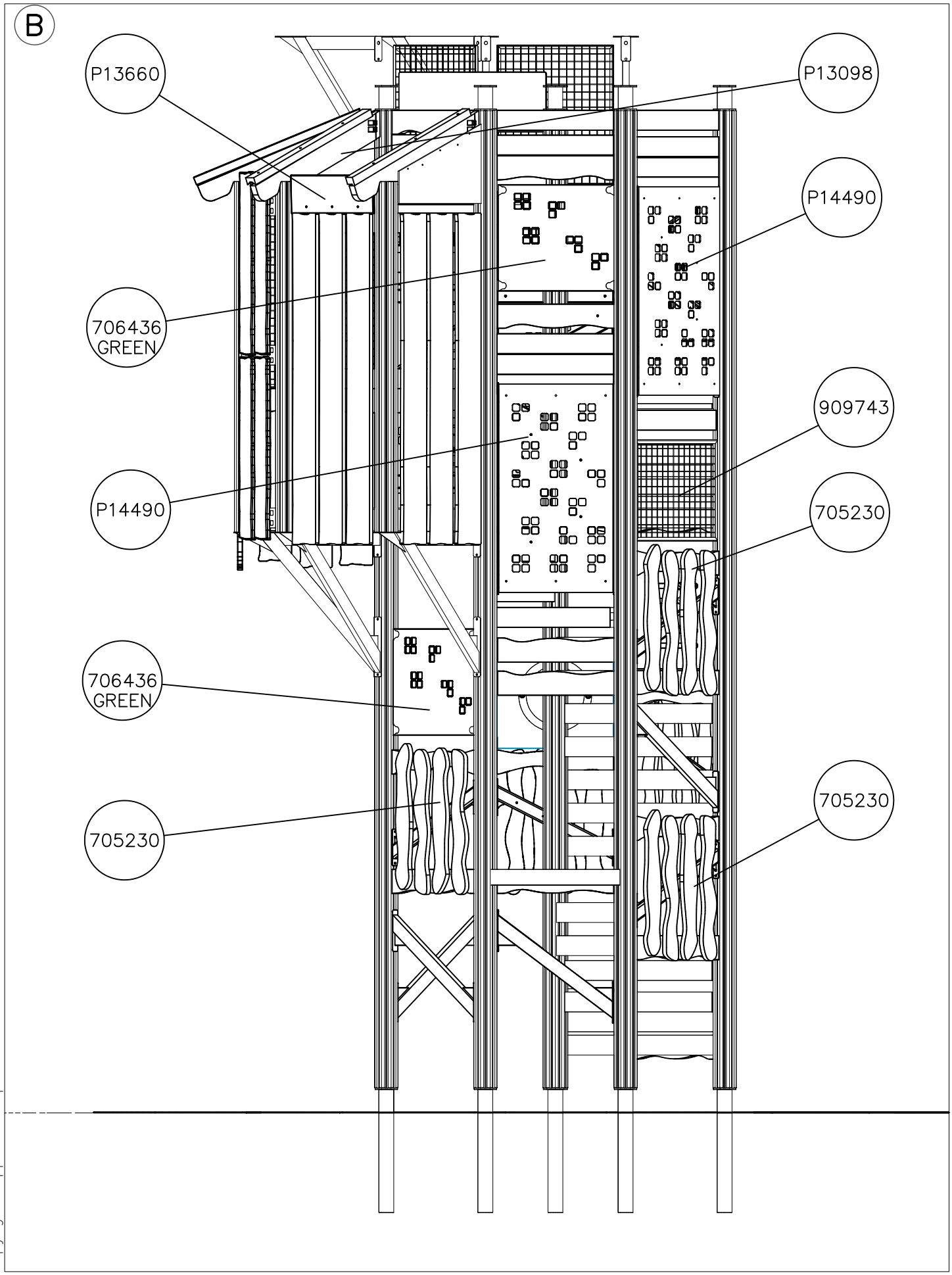

Copyright Lappset Group Ltd

LAPPSET®
FLORA

175528

DATE: 10.2.2021

TOWER A8
7a

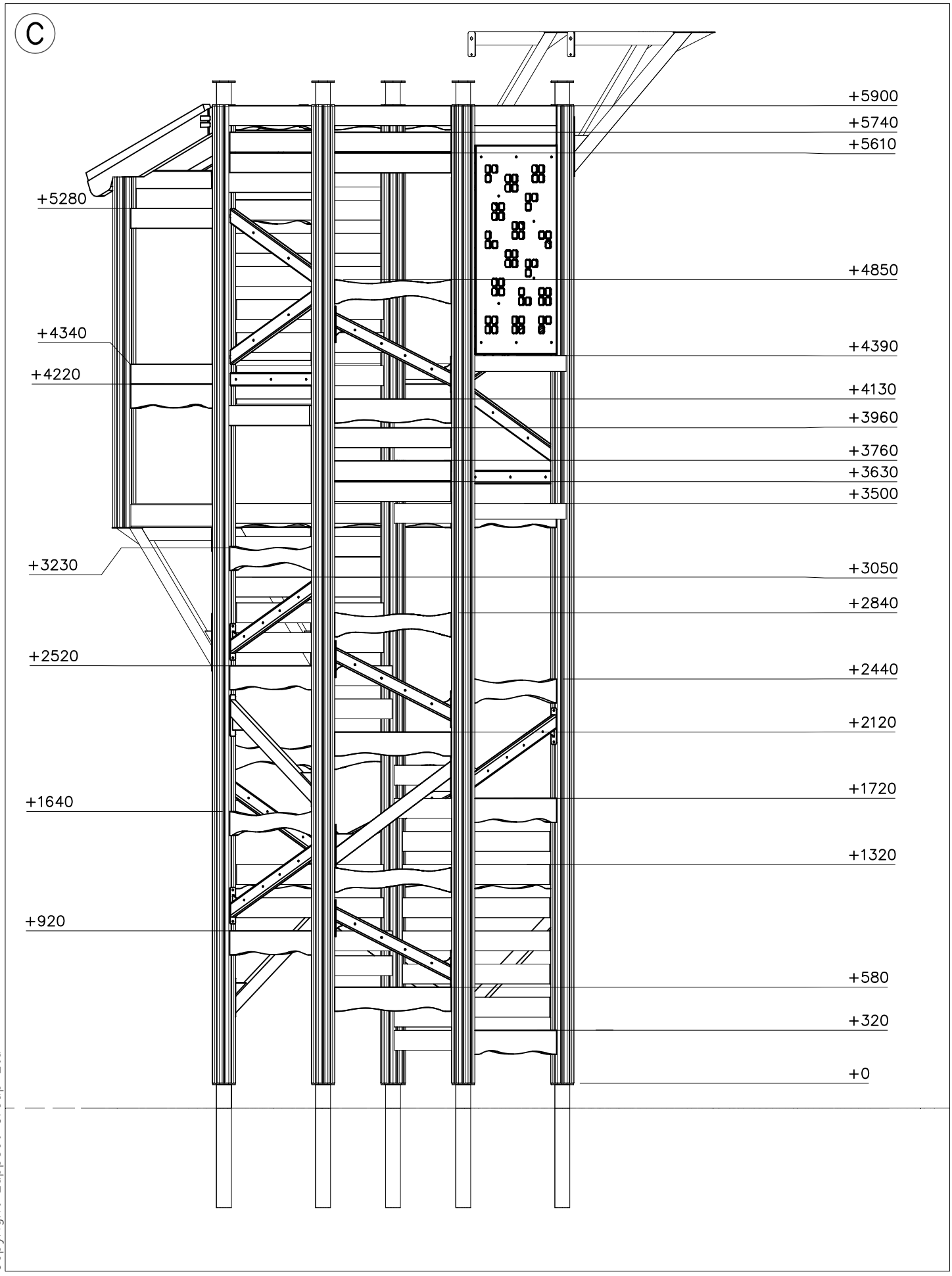

Copyright Lappset Group Ltd

LAPPSET®
FLORA

175528

TOWER A9
7a

DATE: 10.2.2021

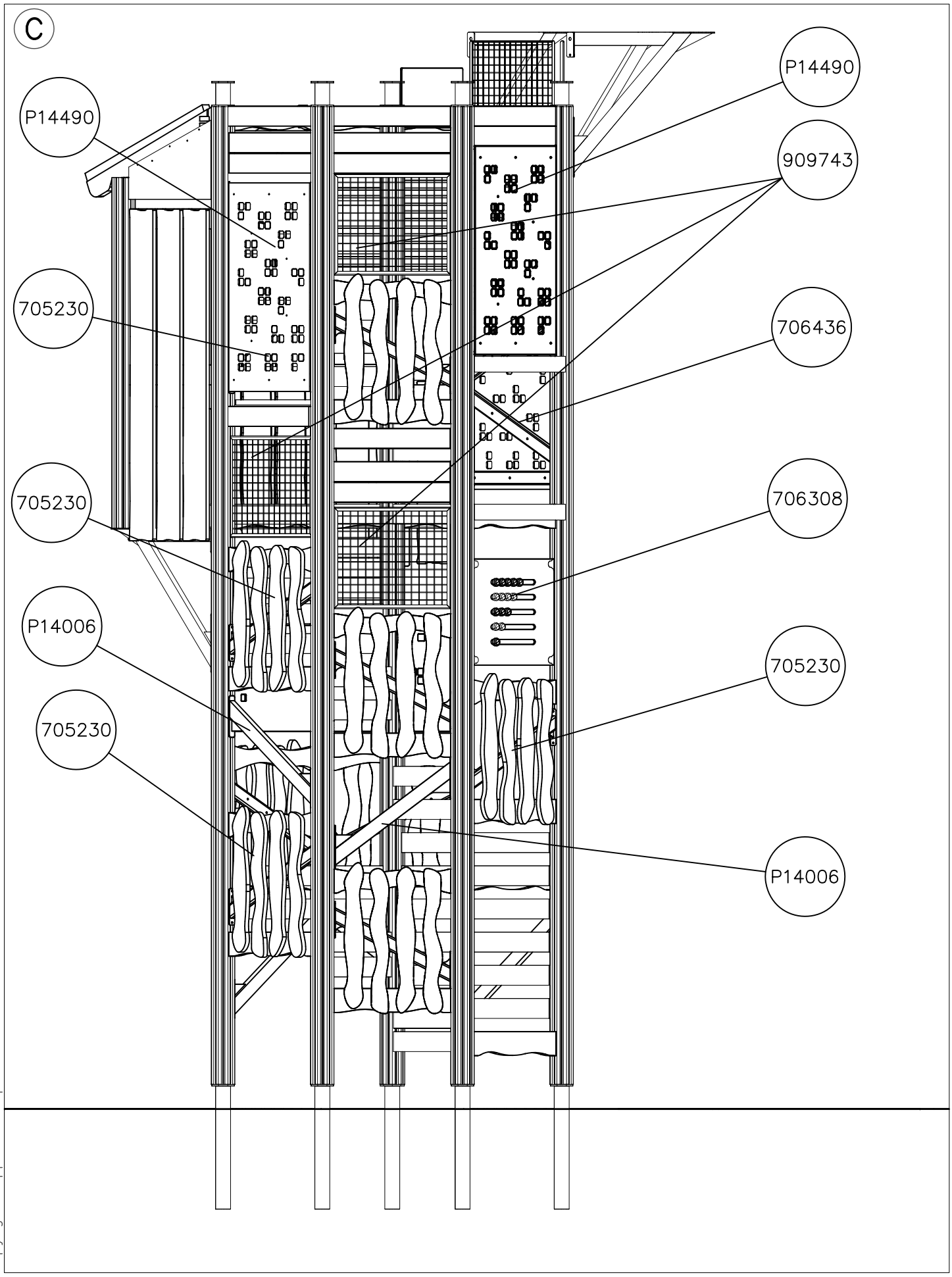

Copyright Lappset Group Ltd

LAPPSET®
FLORA

175528

TOWER A10
7a

DATE: 10.2.2021

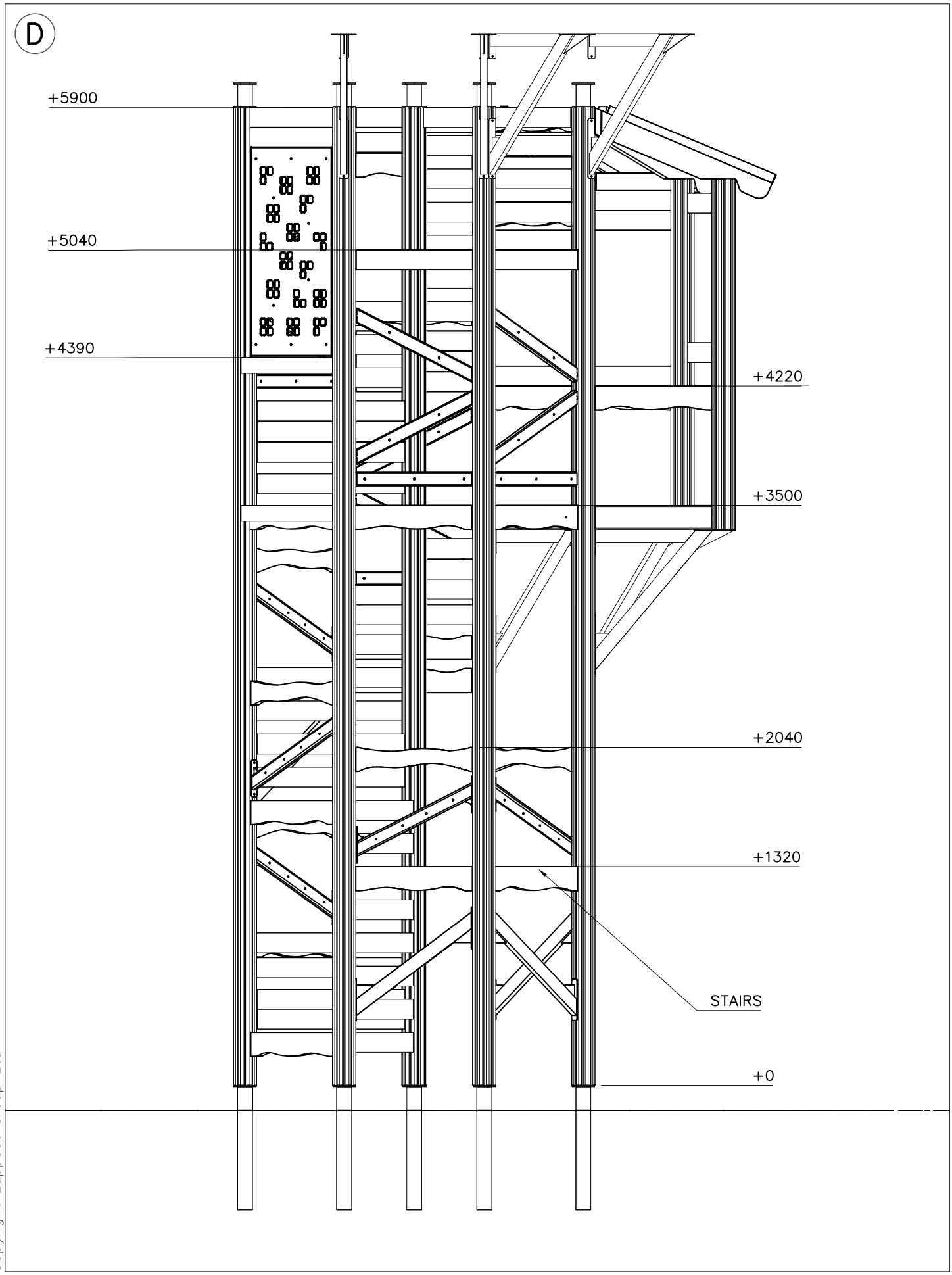

Copyright Lappset Group Ltd

LAPPSET®

FLORA

175528

TOWER A11

7a

DATE: 10.2.2021

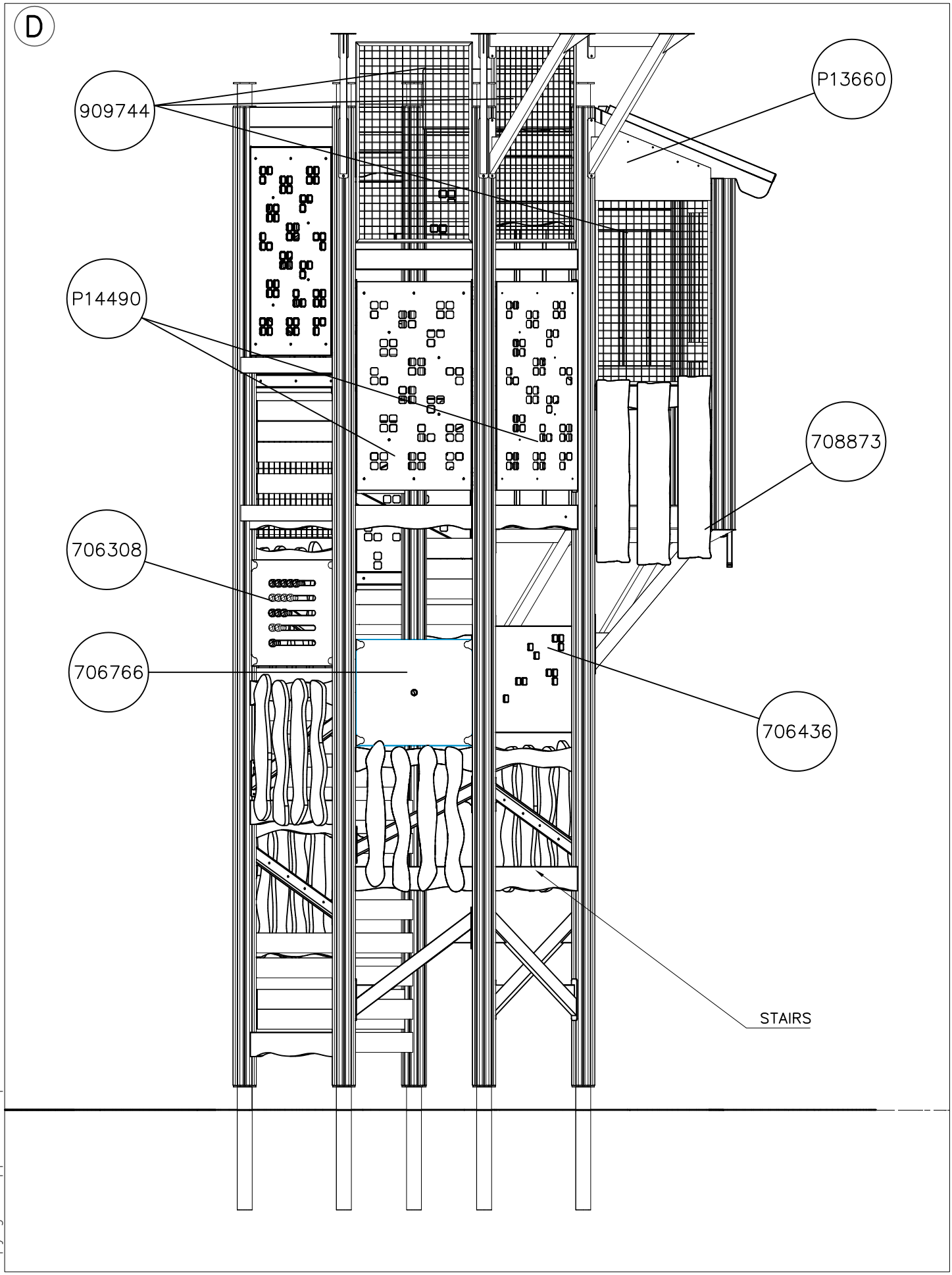

Copyright Lappset Group Ltd

LAPPSET®
FLORA

175528

DATE: 10.2.2021

TOWER B
7b

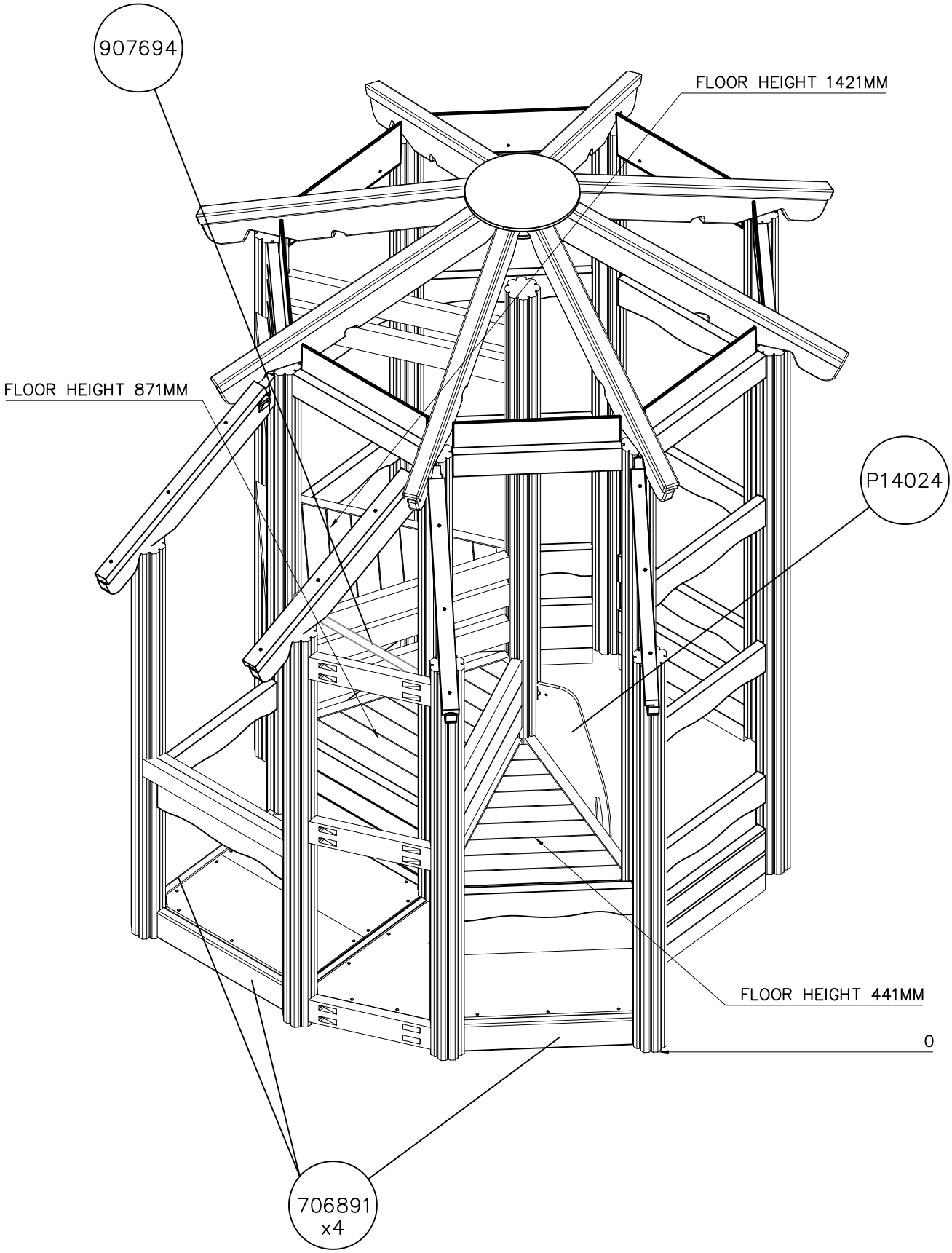

Copyright Lappset Group Ltd

LAPPSET®
FLORA

175528

DATE: 10.2.2021

TOWER B1
7b

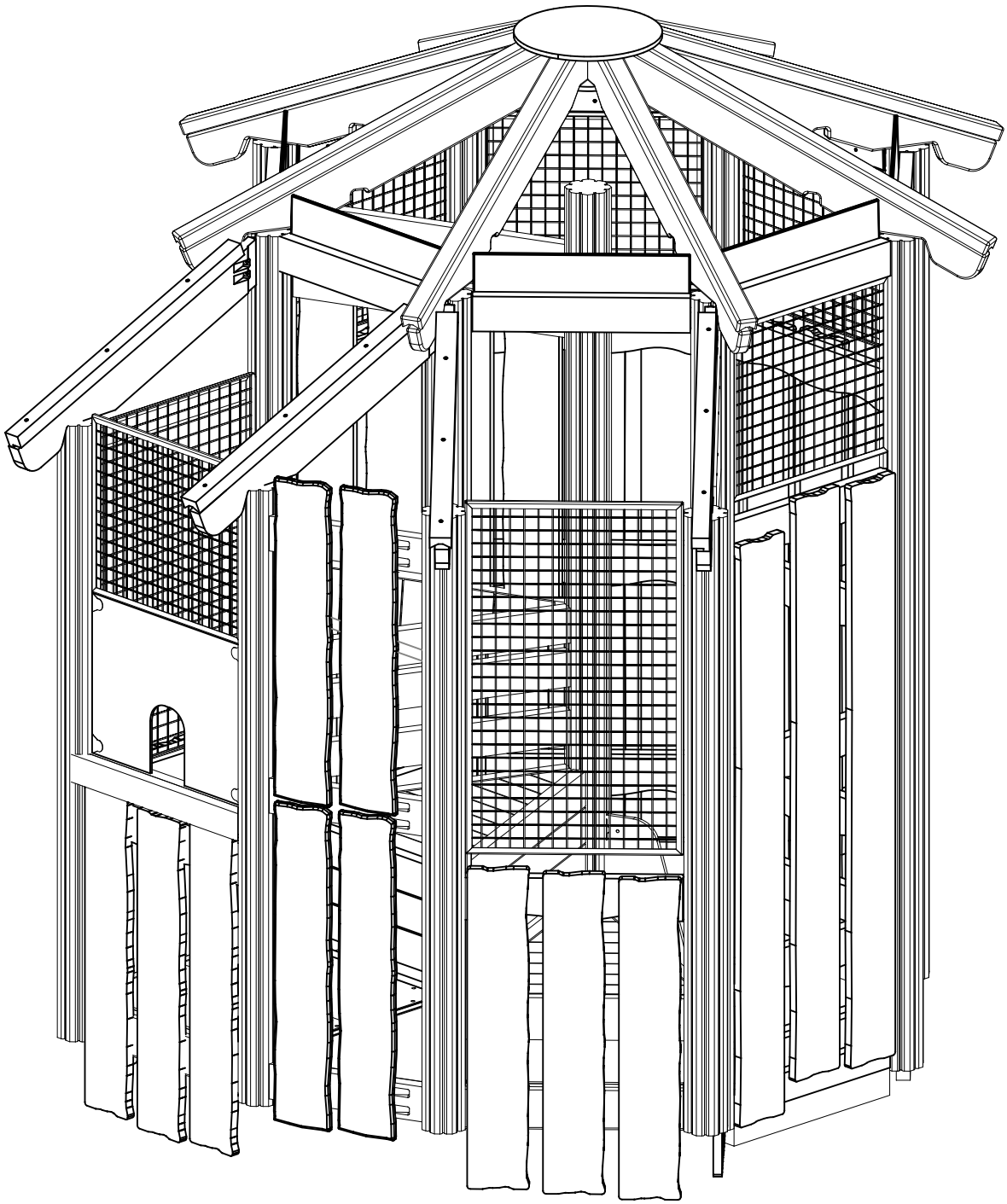

Copyright Lappset Group Ltd

LAPPSET®
FLORA

175528

TOWER B2

7b

DATE: 10.2.2021

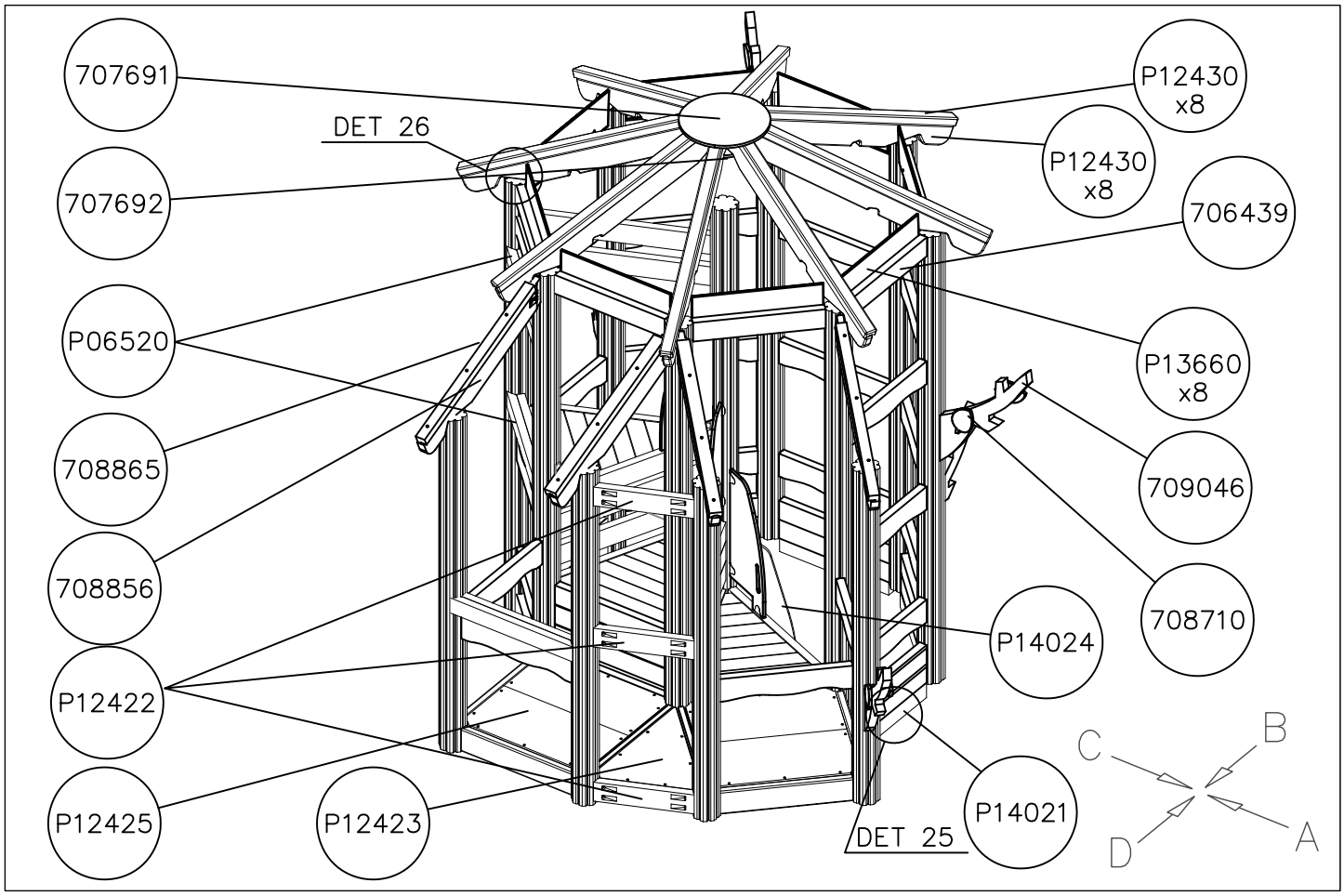

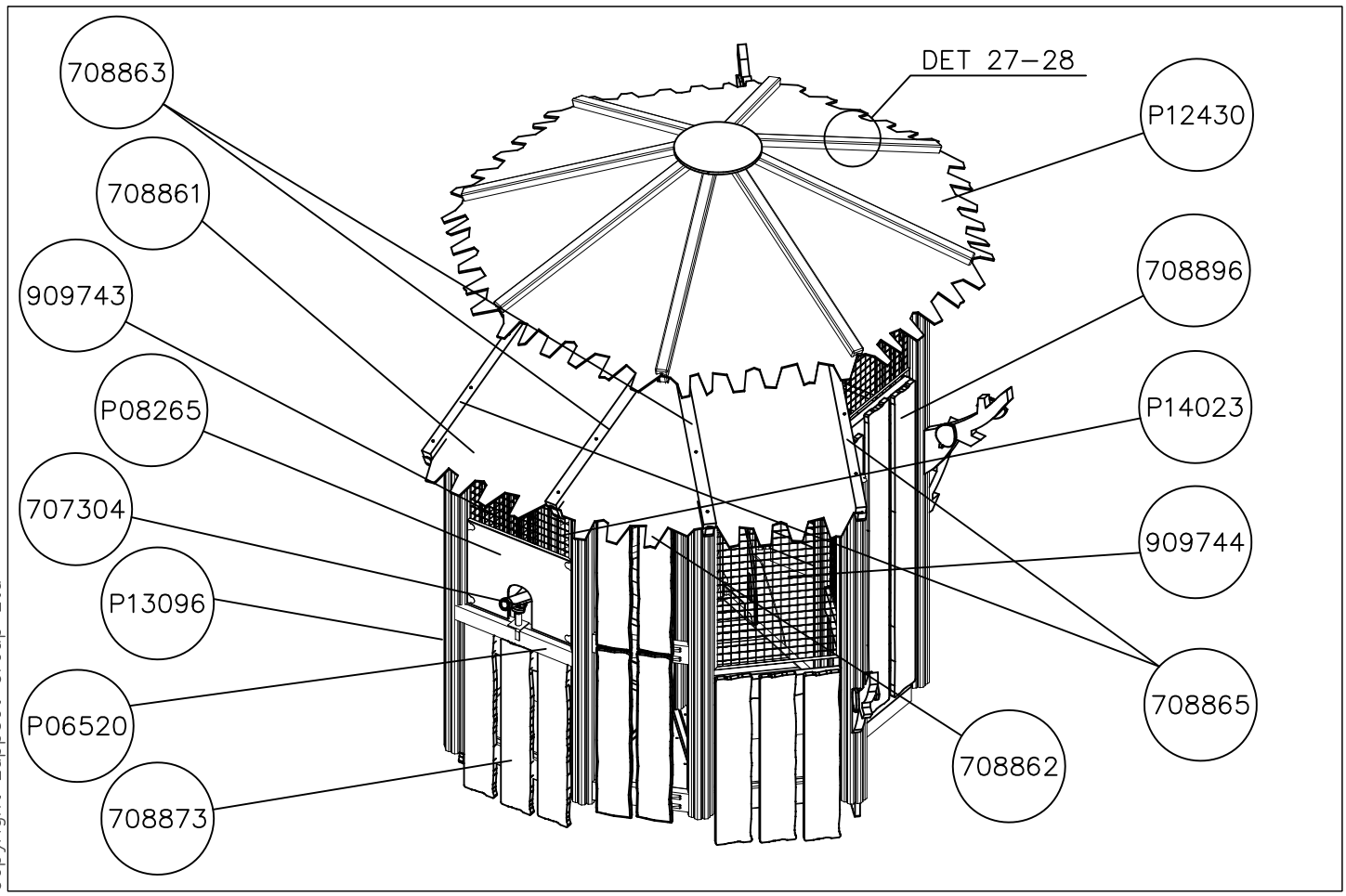

Copyright Lappset Group Ltd

LAPPSET®
FLORA

175528

TOWER B3
7c

DATE: 10.2.2021

1:50

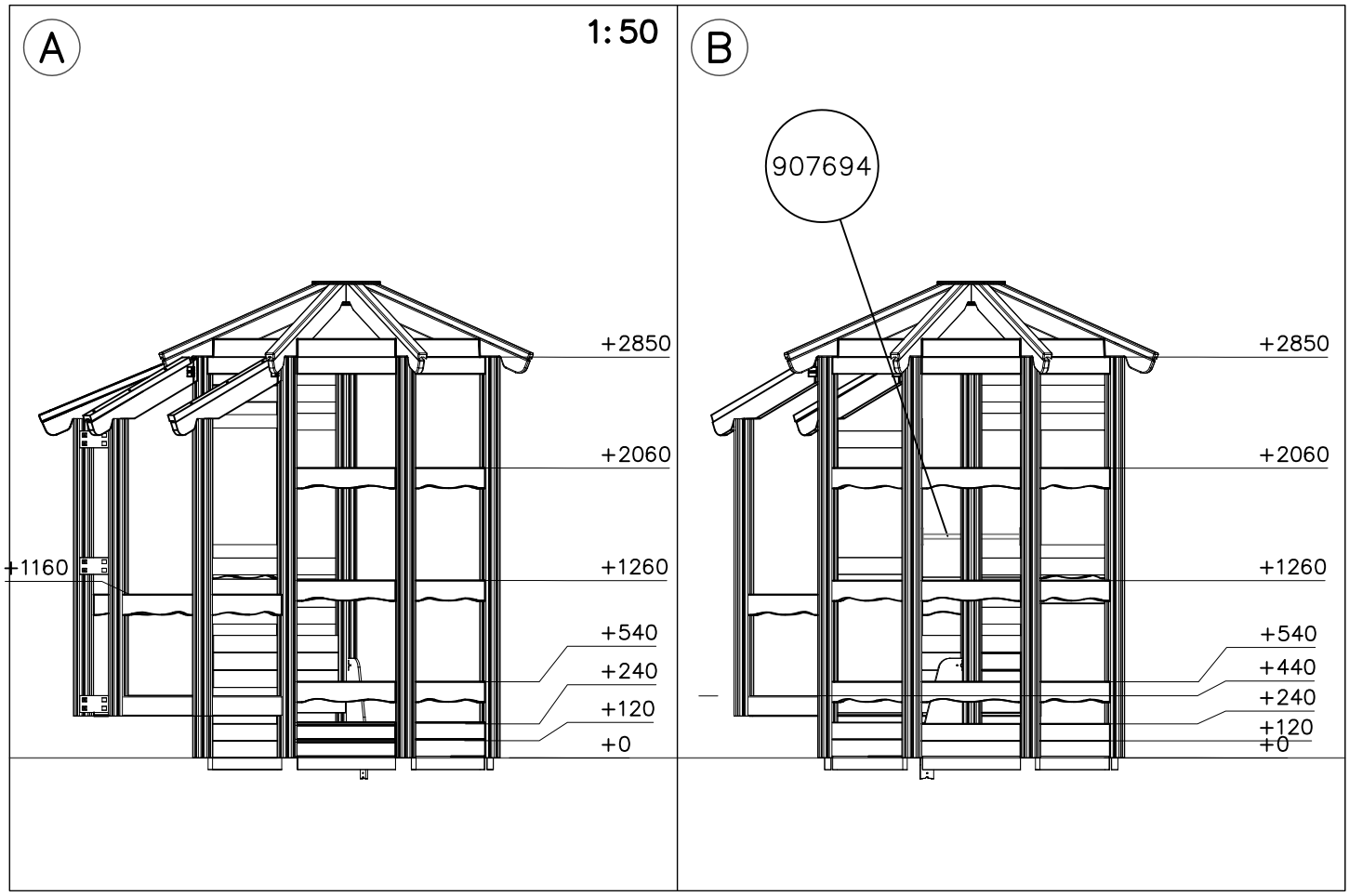

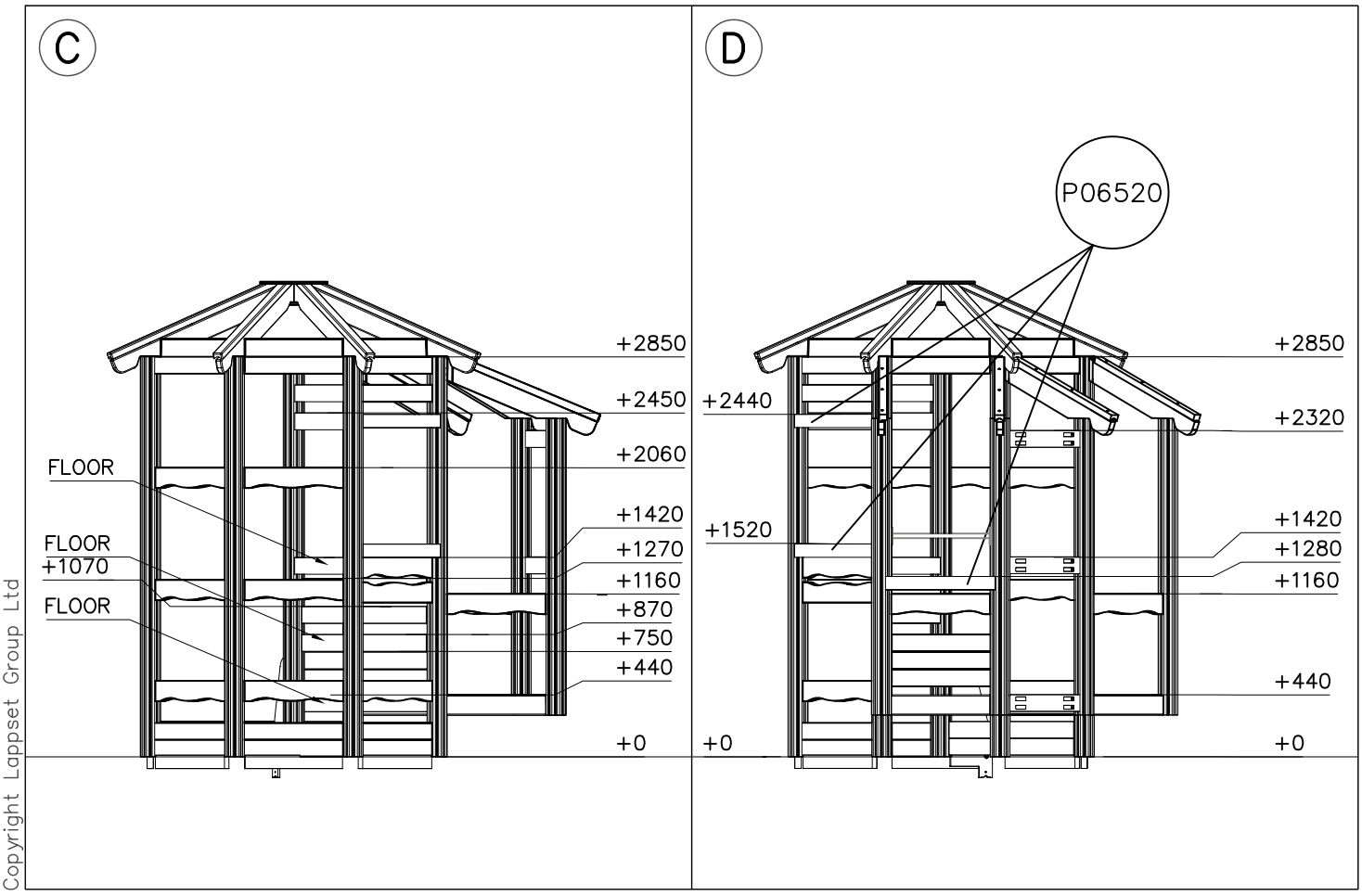

Copyright Lappset Group Ltd

LAPPSET®
FLORA

175528

TOWER B4

DATE: 10.2.2021

7c

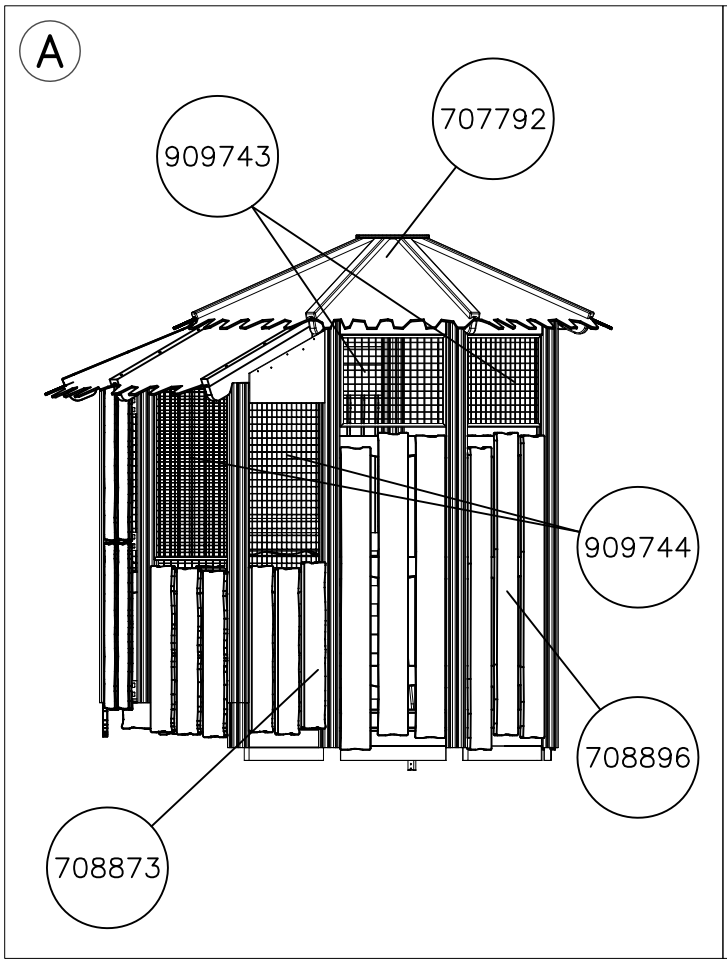

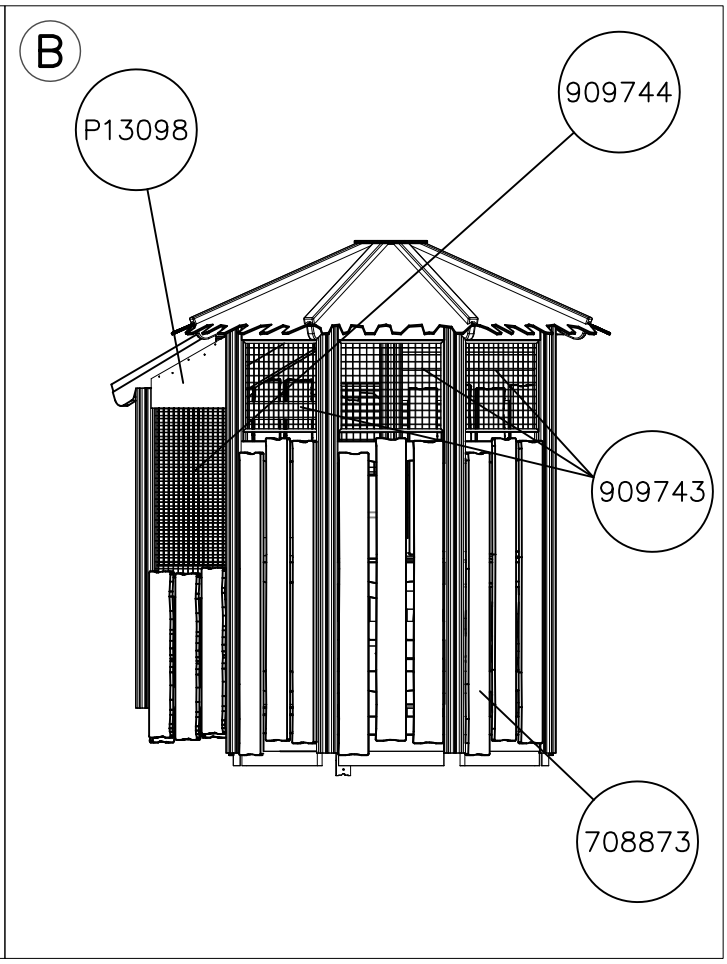

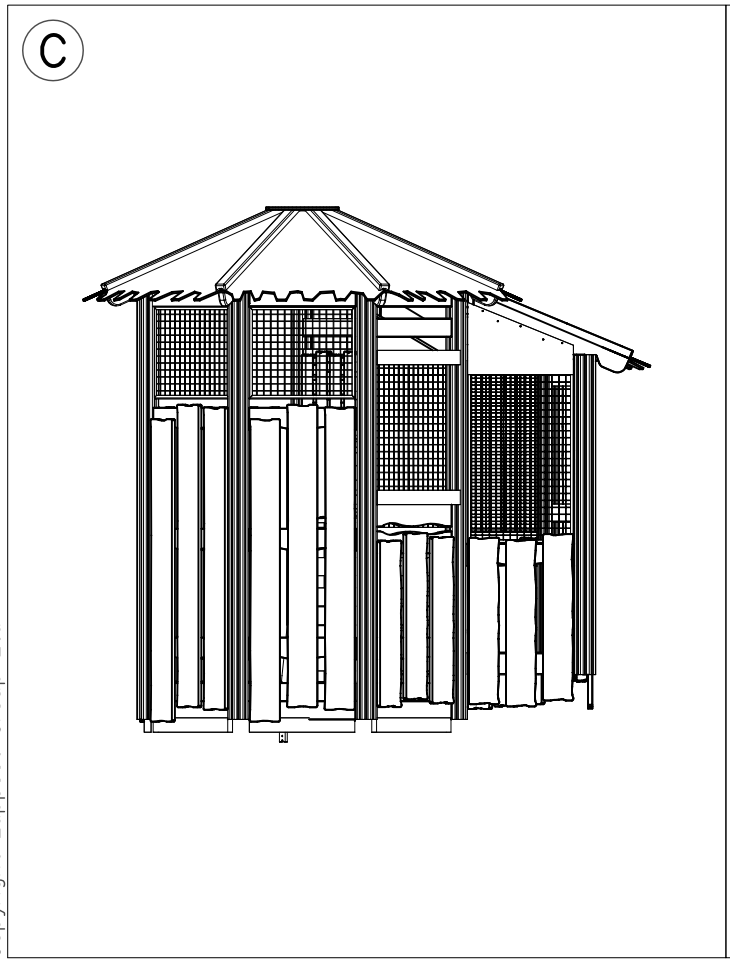

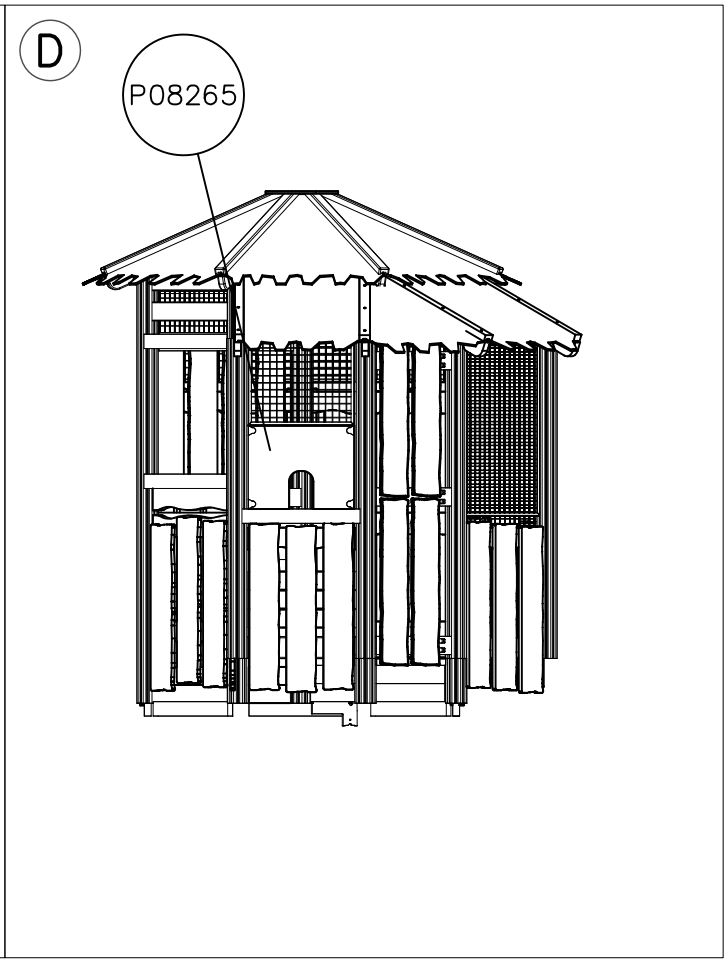

Copyright Lappset Group Ltd

LAPPSET®

FINNO

175528

DATE: 10.2.2021

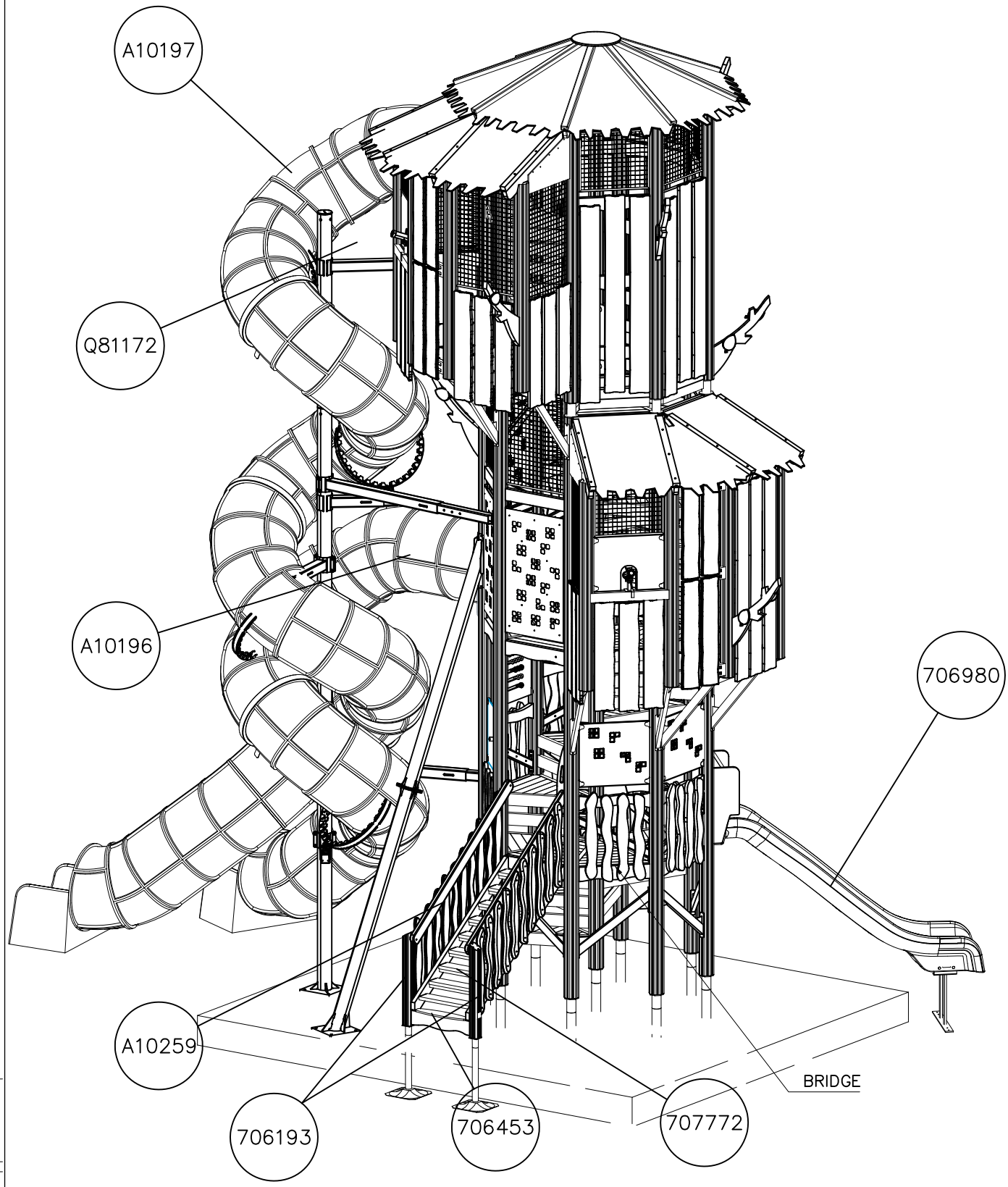

Copyright Lappset Group Ltd

LAPPSET®

FINNO

175528

DATE: 10.2.2021

8a

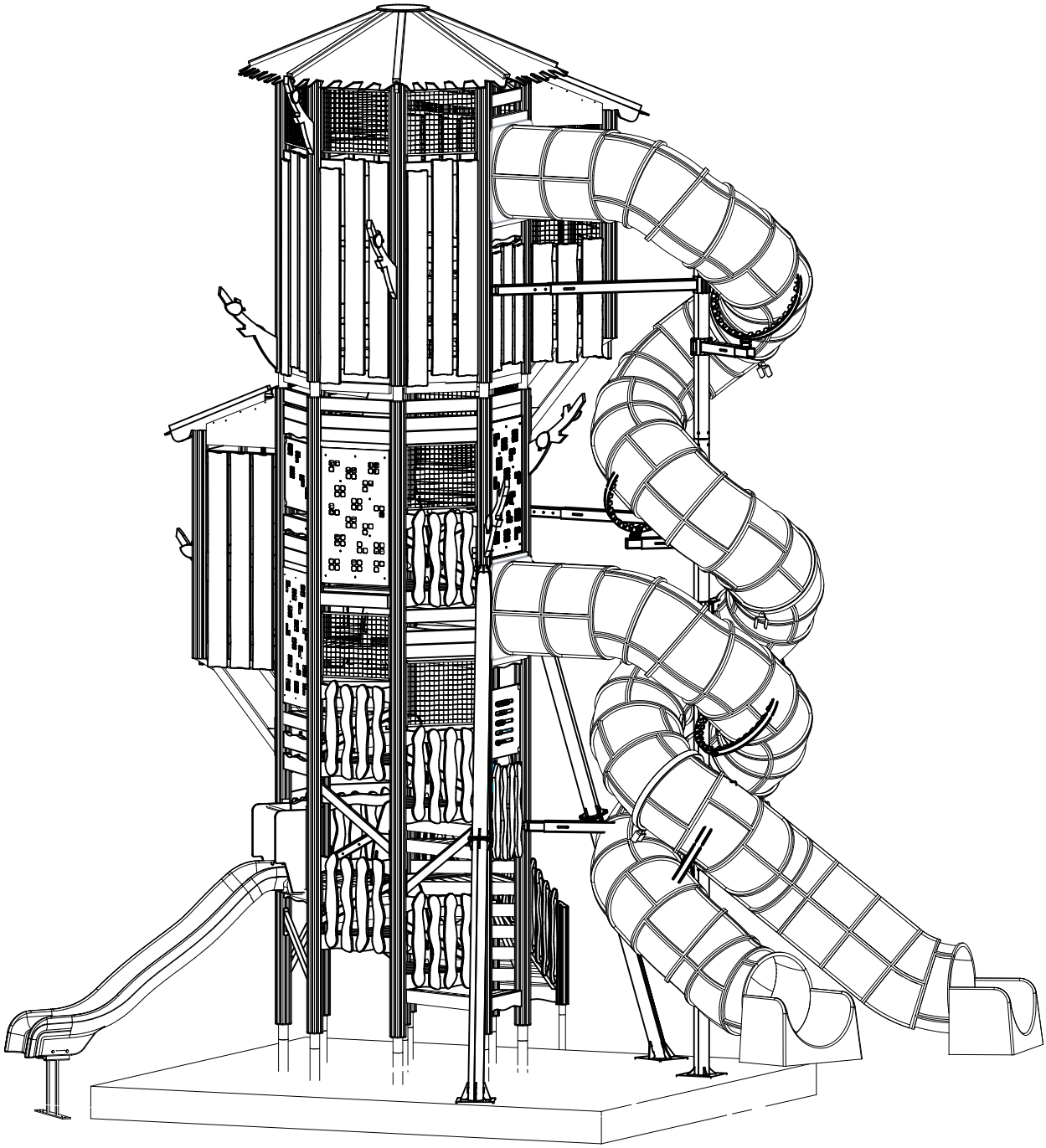

Copyright Lappset Group Ltd

LAPPSET®
FLORA

P14540

DATE: **8.7.2022**

DET 32

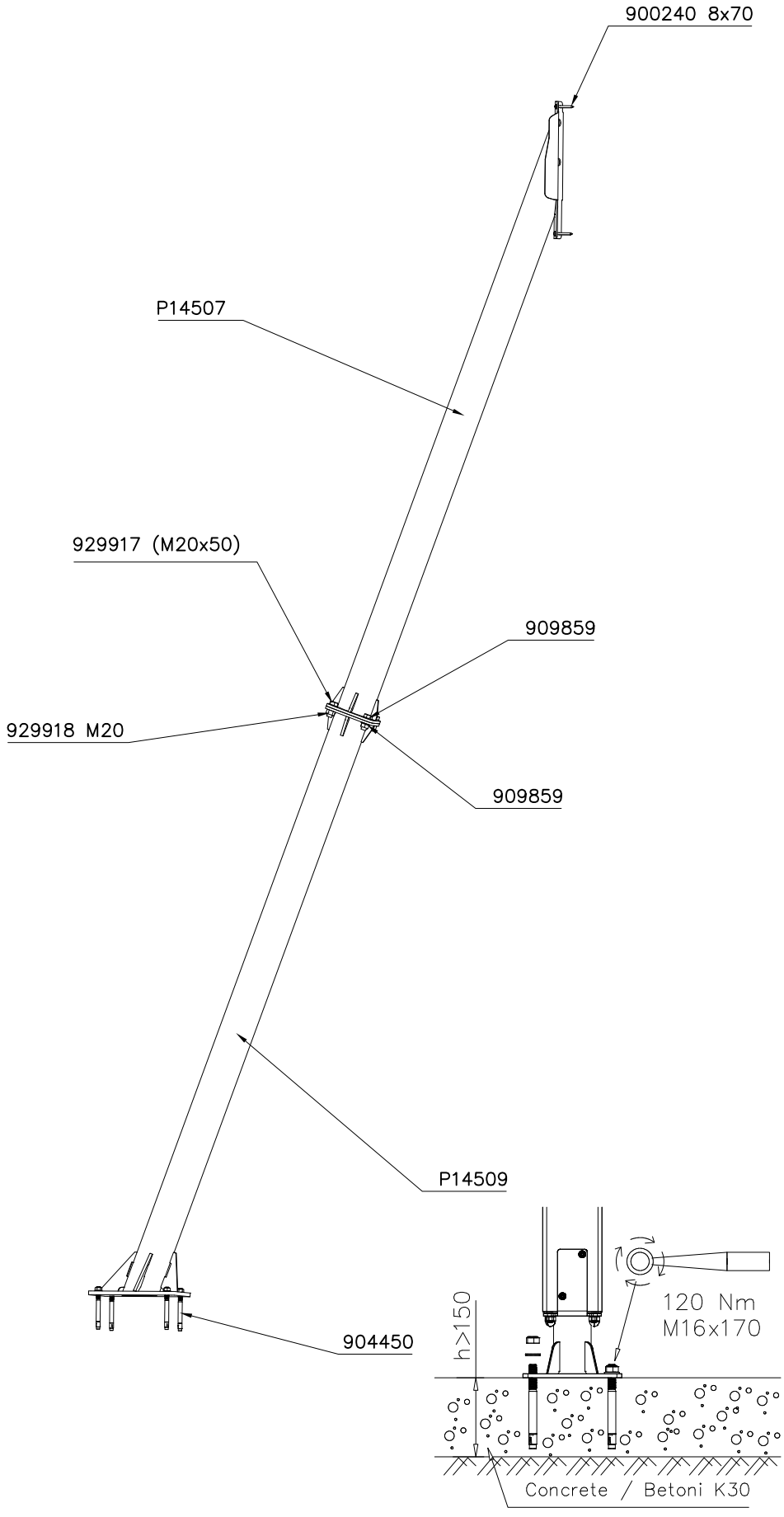

929917

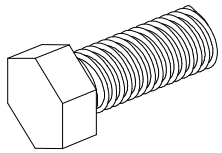

909859

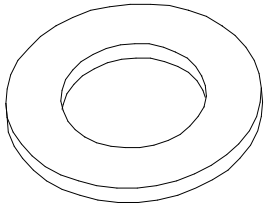

929918

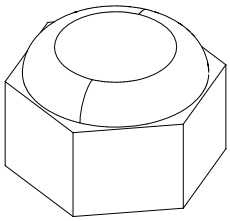

904450

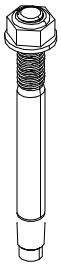

Copyright Lappset Group Ltd

LAPPSET®
CUBIC

Q81172

DATE: 26.11.2019

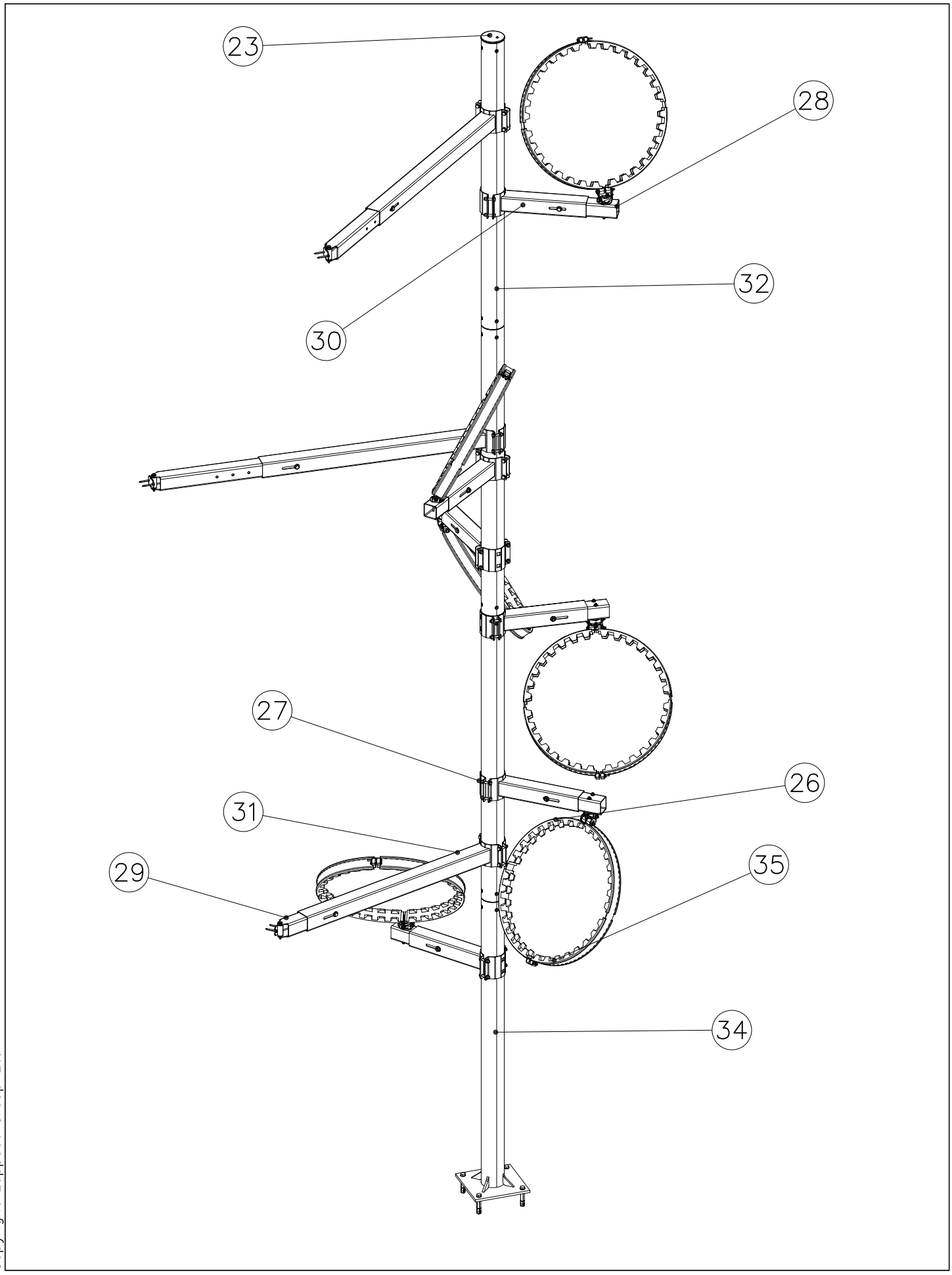

Copyright Lappset Group Ltd

LAPPSET®
CUBIC

Q81172

DATE: 26.11.2019

1 909248	PCS	2 909633	PCS	3 929426	PCS	4 980150	PCS	5 909520	PCS	6 909253	PCS
	50		12		4		39		4		23
M12		M8		M16x100		M8		Ø30/17		Ø32/13.5/2	
7 980154	PCS	8 980152	PCS	9 905051	PCS	10 980151	PCS	11 909256	PCS	12 929914	PCS
	72		12		54		24		12		4
Ø24/13		Ø24/8.4x2		Ø24/8.4		Ø16/8.4		Ø16/8.4x1.6		M16x110	
13 909130	PCS	14 909142	PCS	15 900958	PCS	16 906498	PCS	17 909097	PCS	18 905827	PCS
	9		36		24		27		12		12
M12x120		M12x70		M10x30		M8x110		M8x60		M8x20	
19 906630	PCS	20 980123	PCS	21 908057	PCS	22 707632	PCS	23 708291	PCS	24 909053	PCS
	4		2		30		1		1		12
8x60		7x60		Ø32/29–L5/30				Ø145			
25 909057	PCS	26 909067	PCS	27 909069	PCS	28 909318	PCS	29 909326	PCS	30 909282	PCS
	9		12		9		6		3		6
31 909317	PCS	32 909278	PCS	33 909071	PCS	34 909068	PCS	35 905864	PCS	36 900240	PCS
	3		3		3		1		24		6
		Ø139.7x1970				Ø139.7x1970				8x70	
37 909287	PCS	38 910405	PCS		PCS		PCS		PCS		PCS
	6		6								
M8x80		90x90x30									

Copyright Lappset Group Ltd

LAPPSET®
CUBIC

Q81172

DATE: 26.11.2019

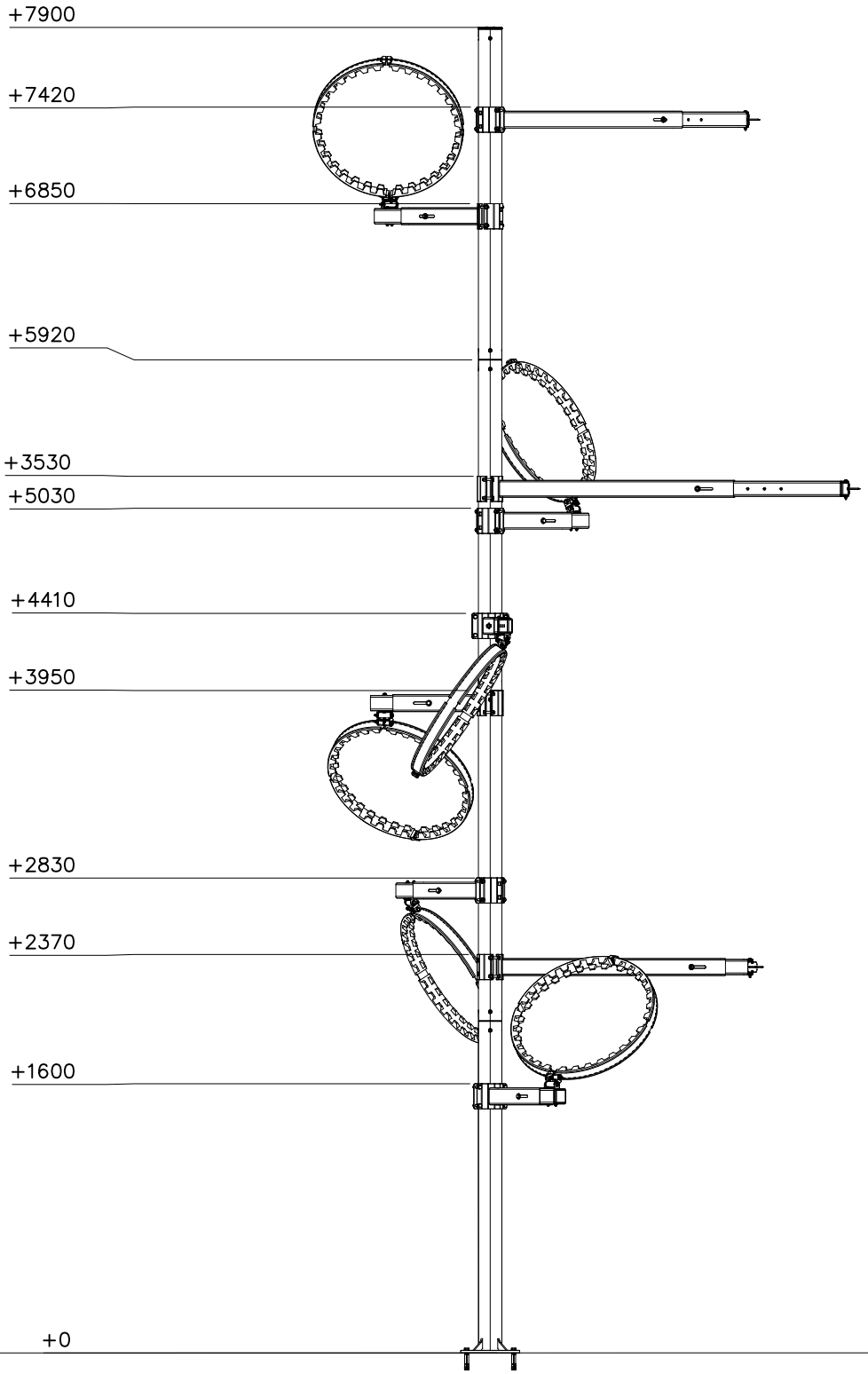

Copyright Lappset Group Ltd

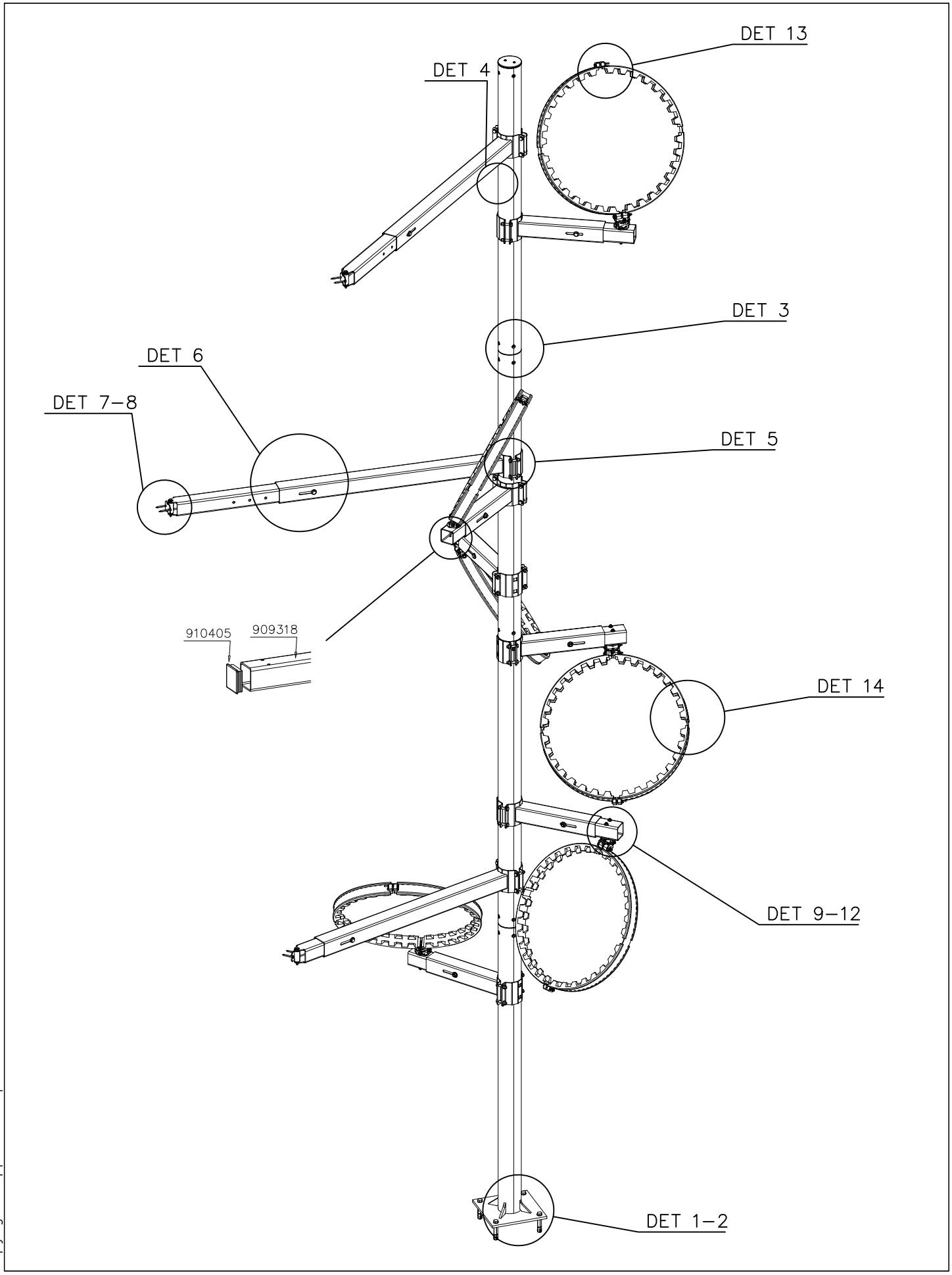

Copyright Lappset Group Ltd

DET 1

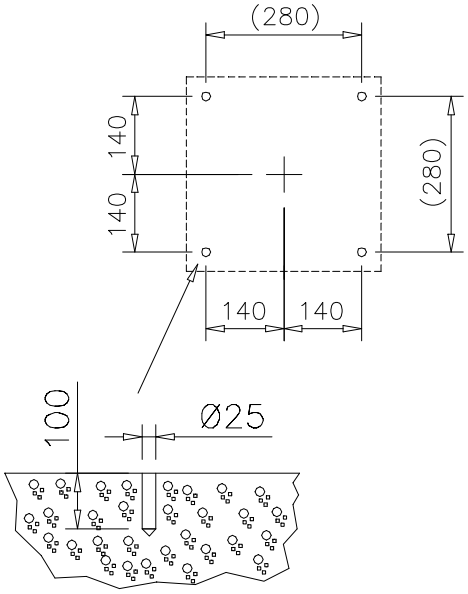

DET 2

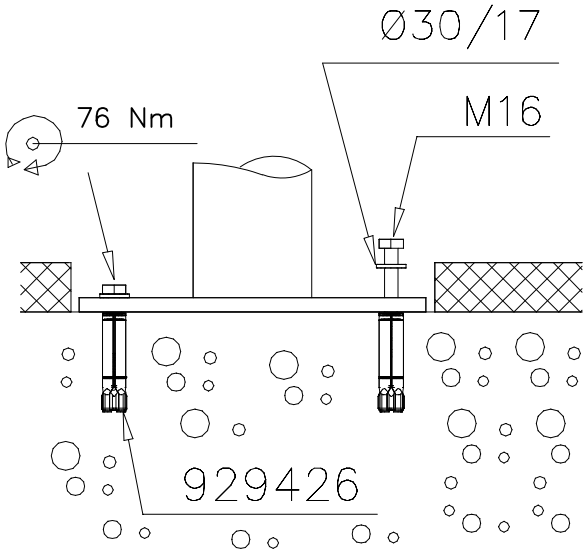

DET 3

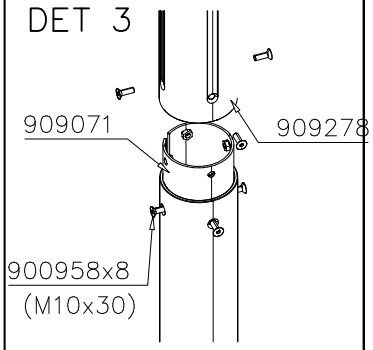

DET 4

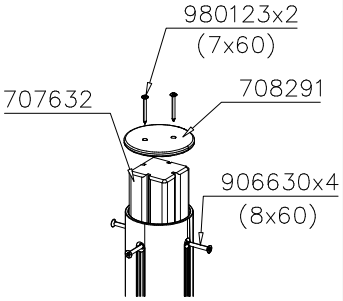

DET 5

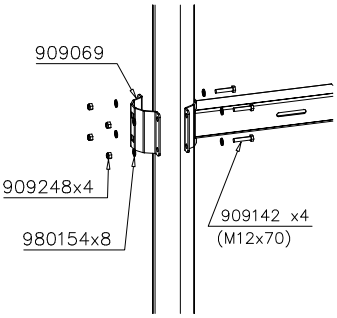

DET 6

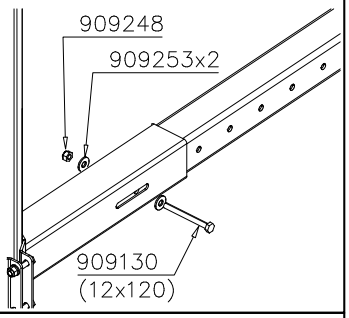

DET 7

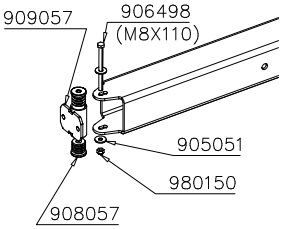

DET 8

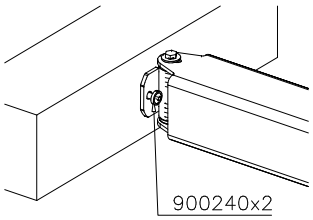

DET 9

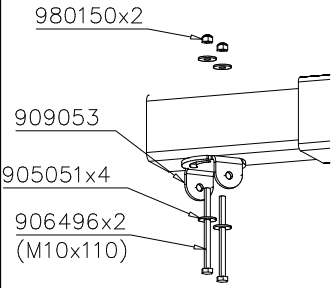

DET 10

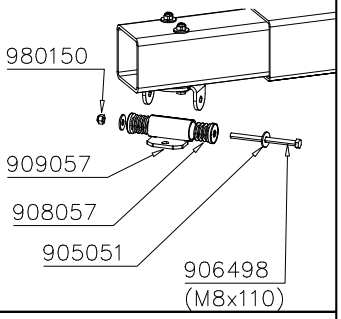

DET 11

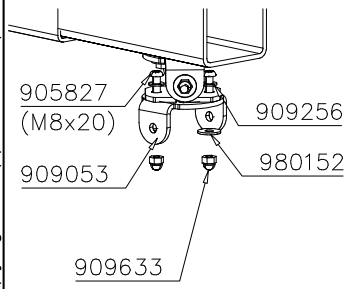

DET 12

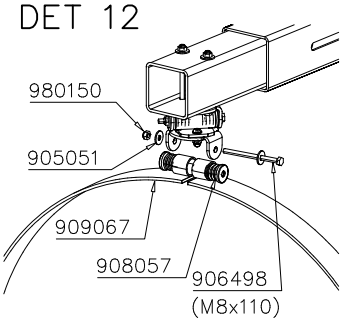

DET 13

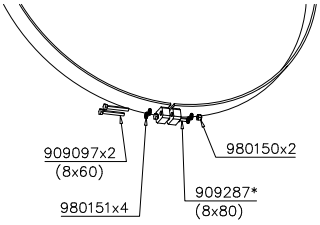

* Use 909287 (8x80) for pre tightening, then add 909097 (8x60) another hole and replace with 909287 (8x80) to 909097 (8x60).

DET 14

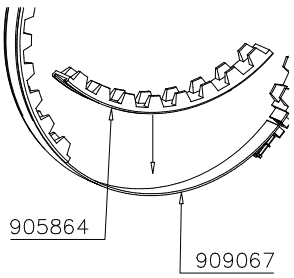

Copyright Lappset Group Ltd

LAPPSET®
CUBIC

Q81172

DATE: 26.11.2019

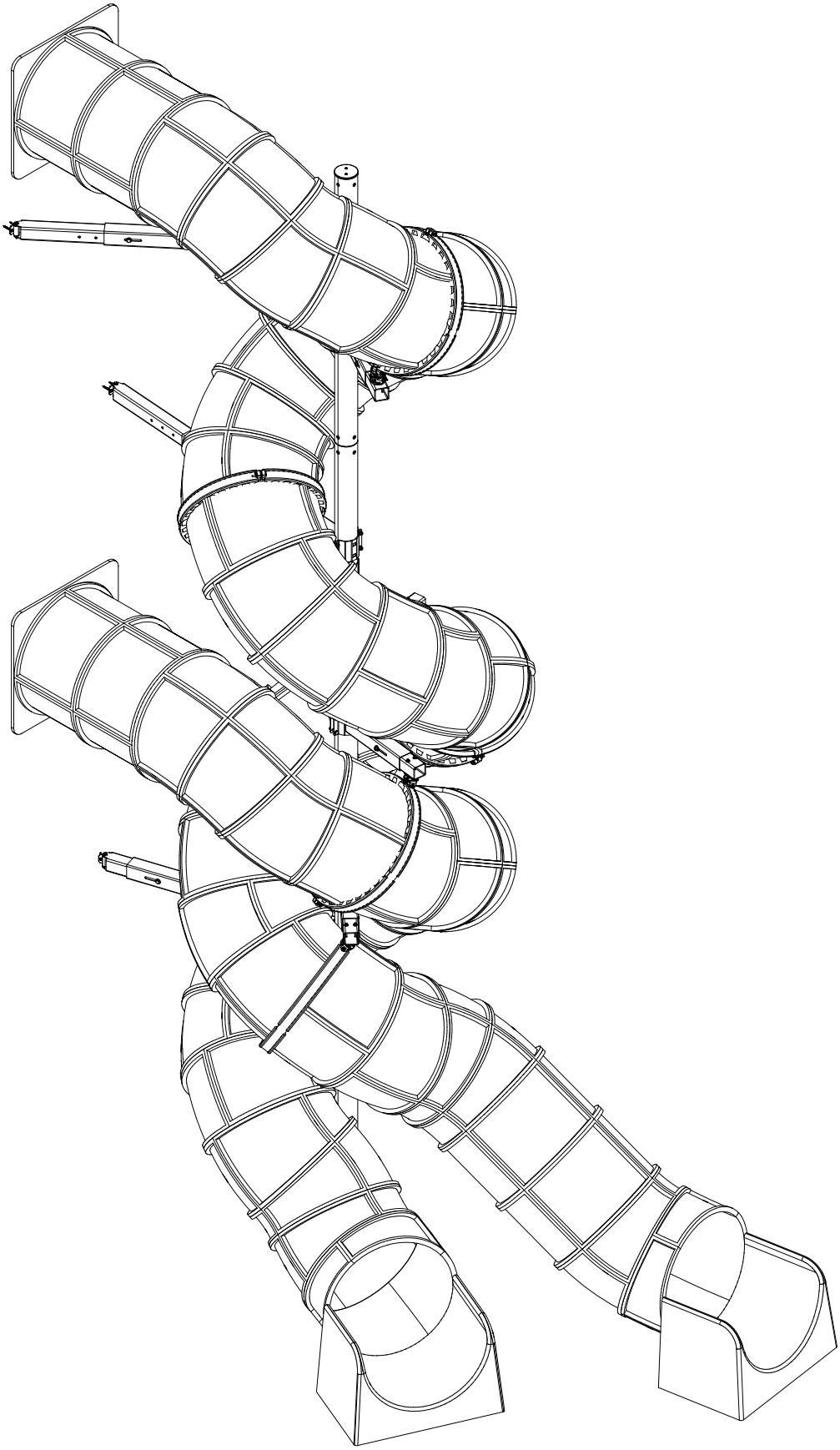

Copyright Lappset Group Ltd

LAPPSET®
CUBIC

Q81172

DATE: 26.11.2019

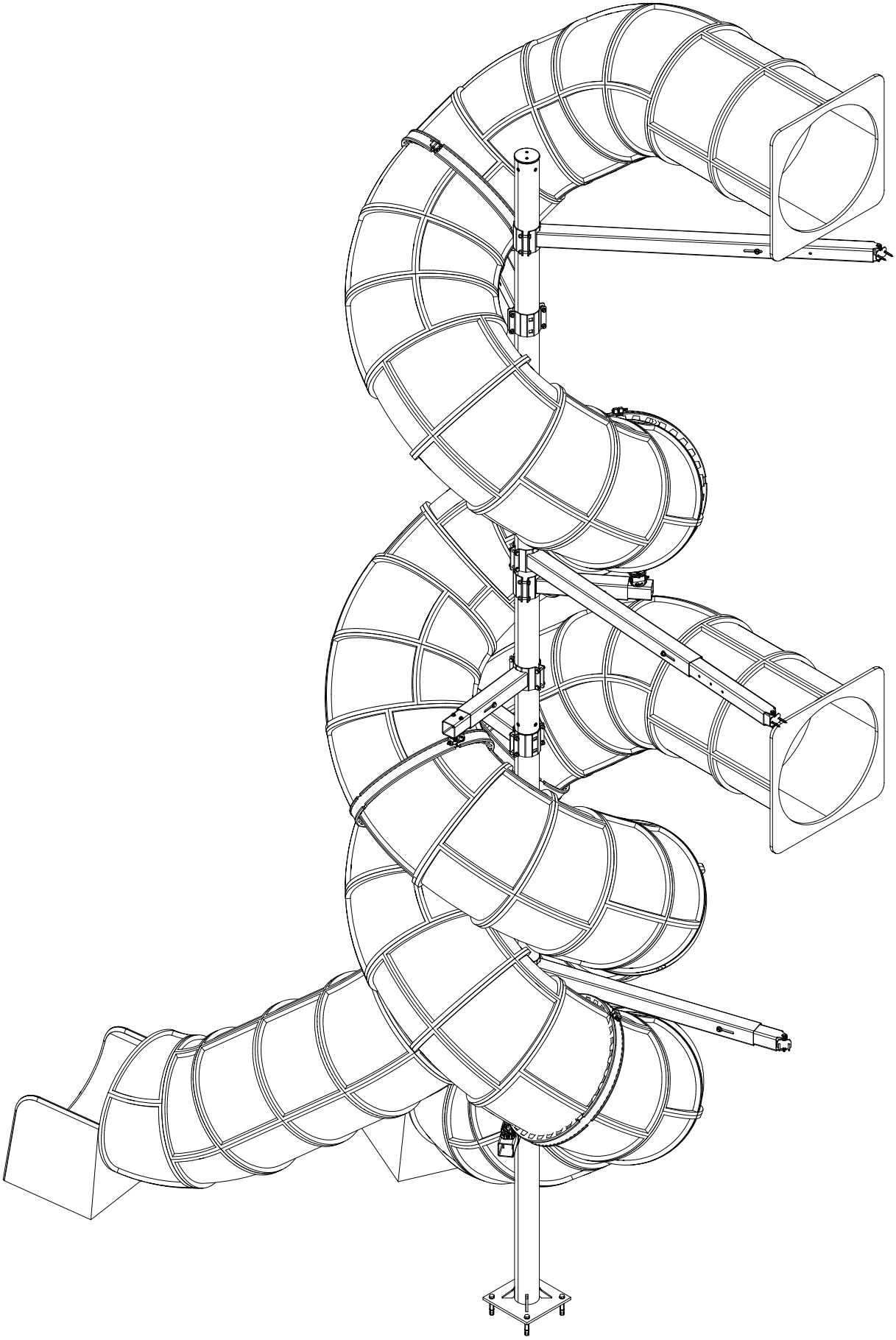

Copyright Lappset Group Ltd

LAPPSET®

FOOT

DEEP FOUNDATION

DATE: 13.3.2014

4A

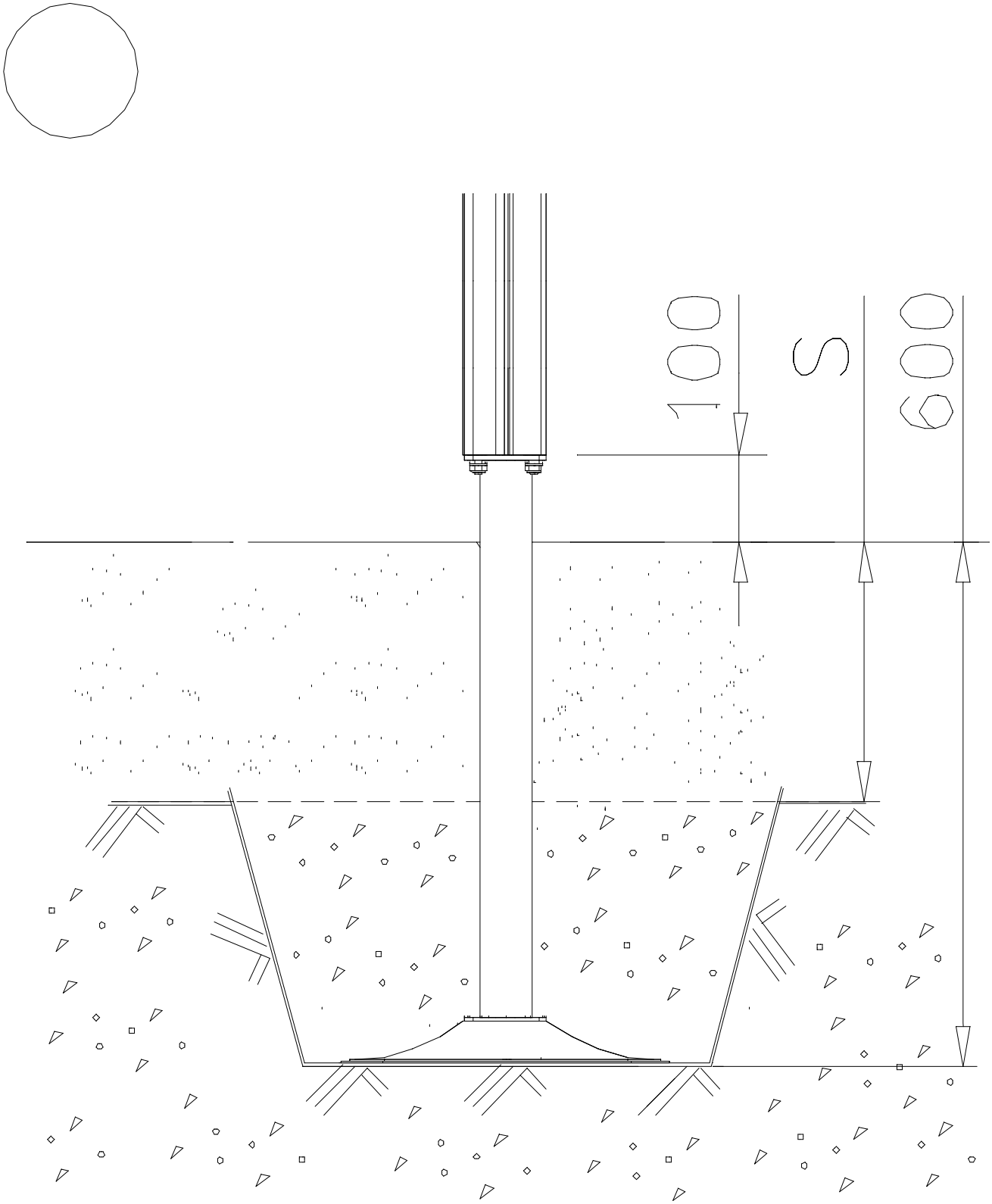

Copyright Lappset Group Ltd

LAPPSET®

FOOT

DEEP FOUNDATION

DATE: 15.5.2018

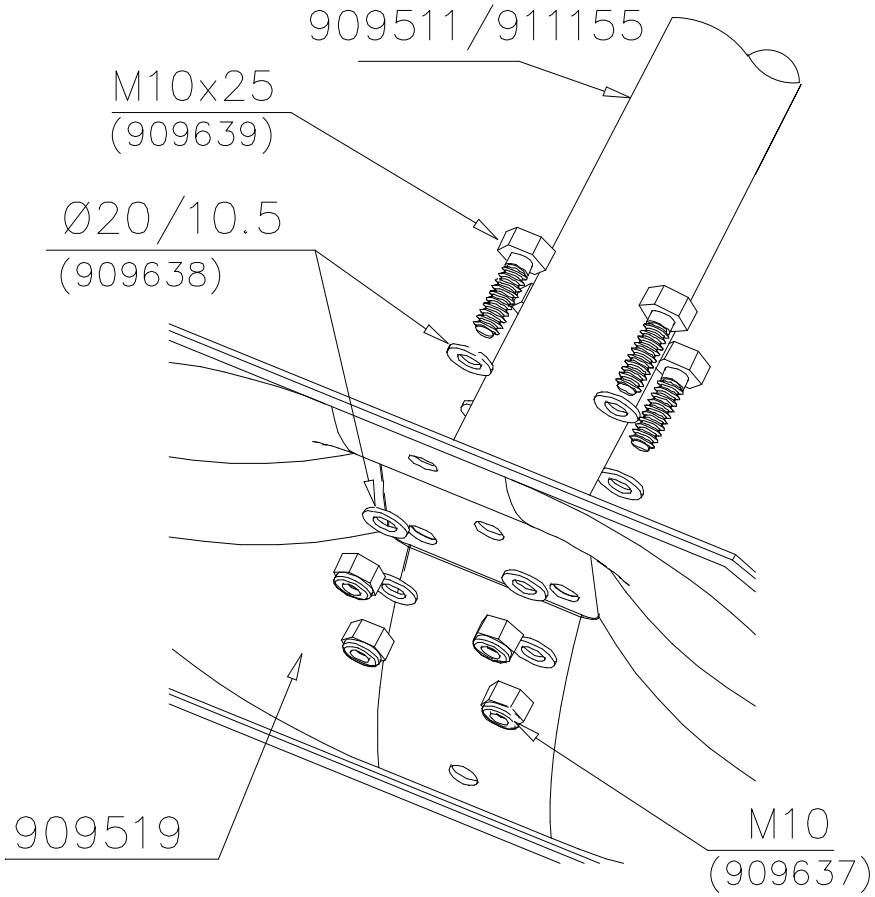

		PCS			PCS
1	909511	1	2	909519	1
	90x90x650			50x380x380	
3	909637	4	4	909638	8
	M10			Ø20/10.5	
5	909639	4	6	905104	4
	M10x25			M10	

OPTION FOOT

		PCS			PCS
1	911155	1			
	90x90x650				

Copyright Lappset Group Ltd

LAPPSET®

WALLS 4 points

HPL

DATE: 29.3.2016

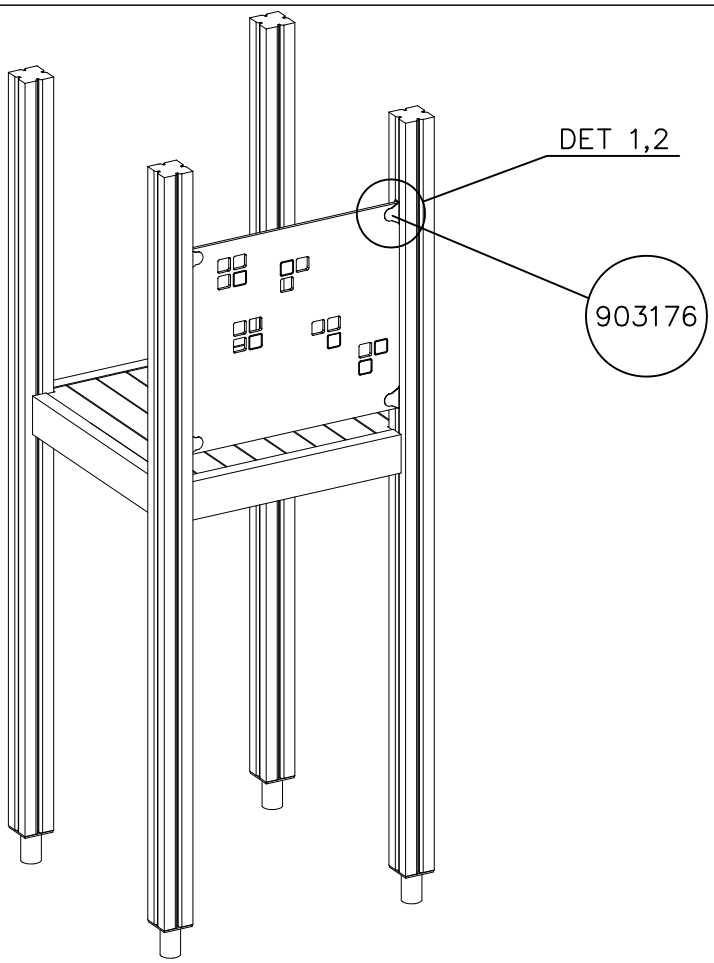

		PCS
1	903176	4
2	909850 M8x25	4
3	909256 Ø16/8.4x1.6	8
4	909633 M8	4
5	980123 Ø7x60	4

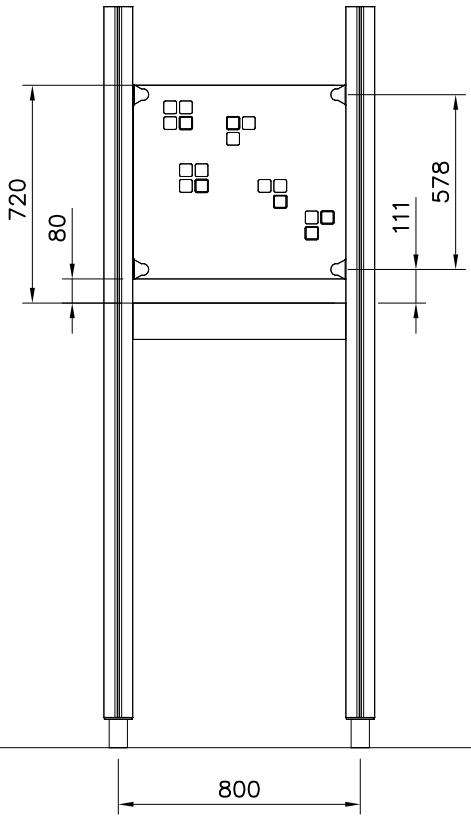

Copyright Lappset Group Ltd

LAPPSET®

WALLS 4 points

HPL

DATE: 29.3.2016

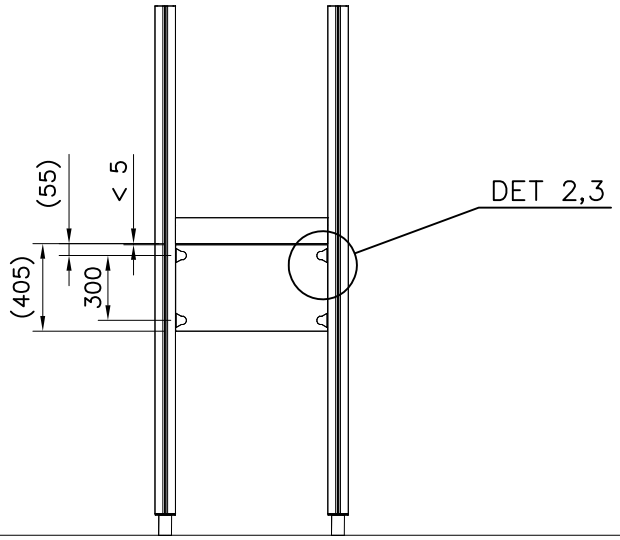

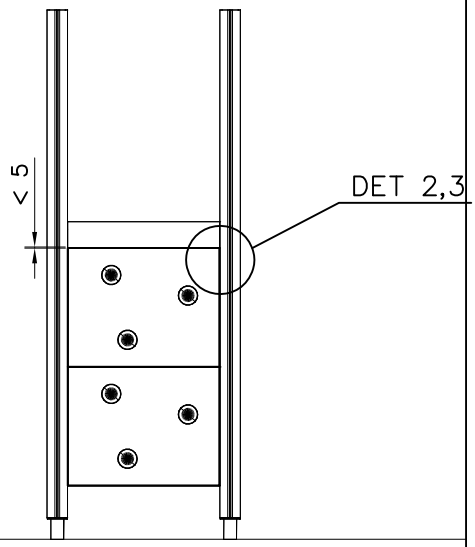

DET 1

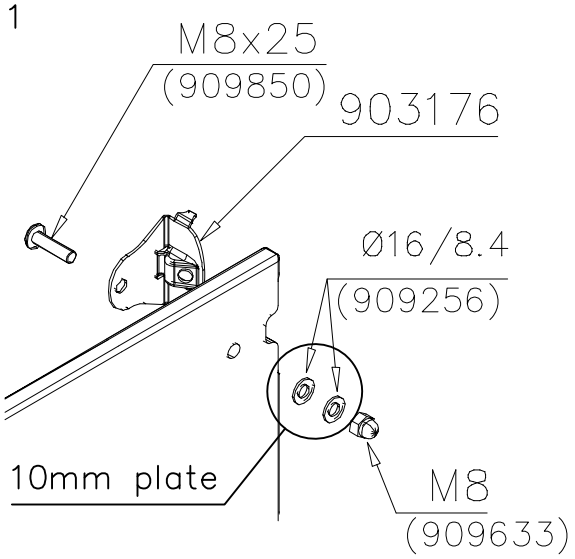

DET 2

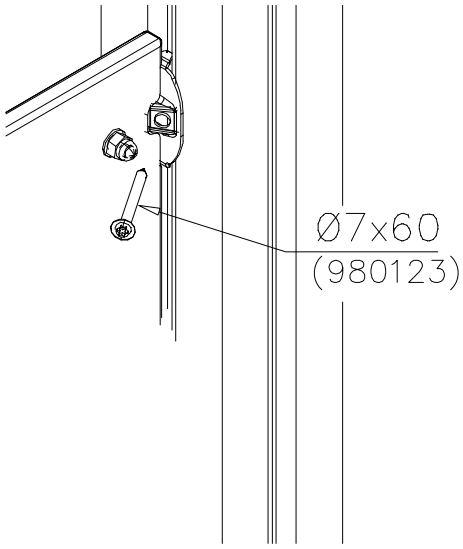

DET 3

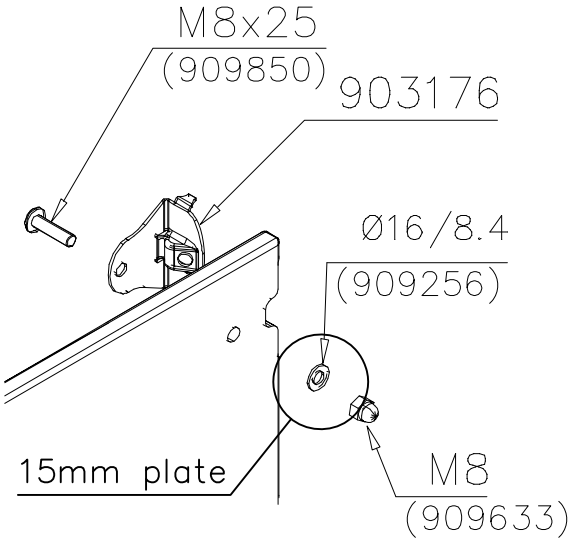

Copyright 1998 Lappset Group Ltd

LAPPSET®

GAME WALL

M80

DATE: 4.11.2019

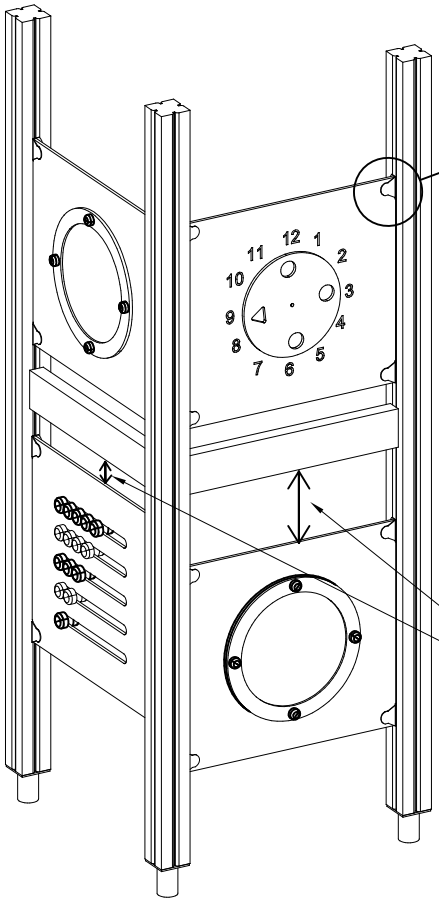

*Note:
No gaps between:
8–25mm
89–230mm

		PCS
1	903176	4
2	909850 M8x25	4
3	909256 Ø16/8.4x1.6	8
4	909633 M8	4
5	980123 Ø7x60	4

COLOR OPTIONS	
–701	BLUE
–702	YELLOW
–703	LIME
–704	DARK GRAY
–705	LIGHT GRAY
–706	RED
–707	GREEN
–708	FUXIA

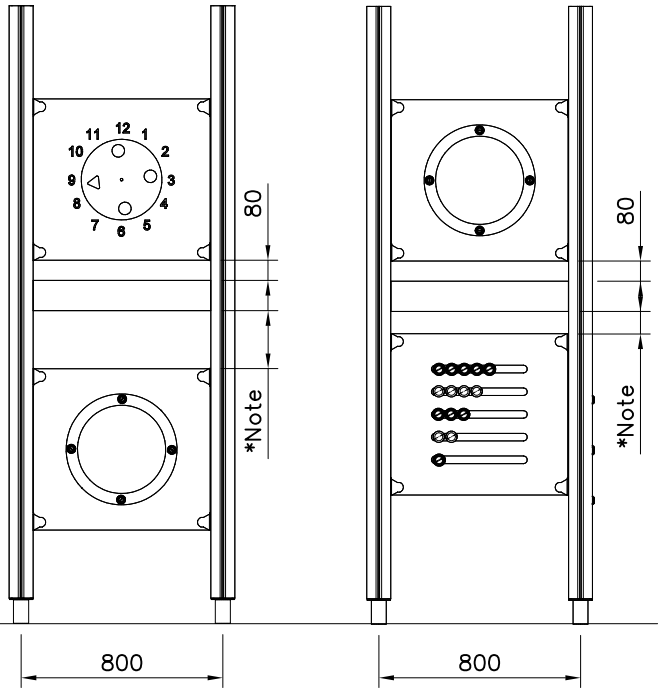

Copyright Lappset Group Ltd

LAPPSET®

GAME WALL

M80

DATE: 4.11.2019

GAME WALL OPTIONS

706766	706772	706308	707453
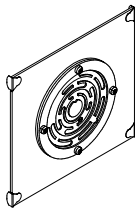 640x702	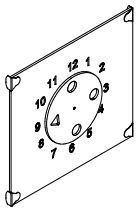 640x702	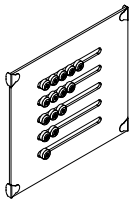 640x702	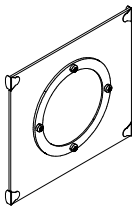 640x702
707209	**705705**	**707433**	**707386**
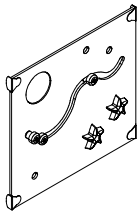 640x702	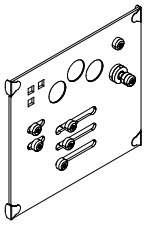 640x702	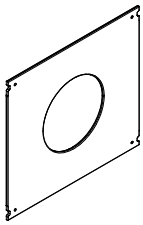 640x702	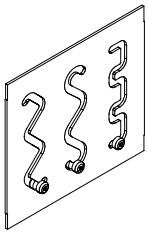 640x702
709403	**709358**	**709405**	
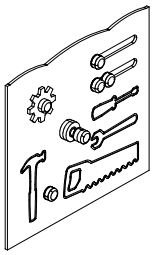 640x702	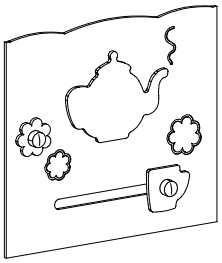 640x702	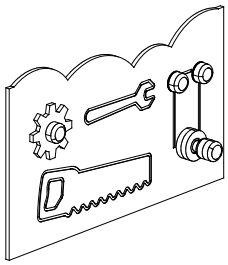 420x702	

DET 1

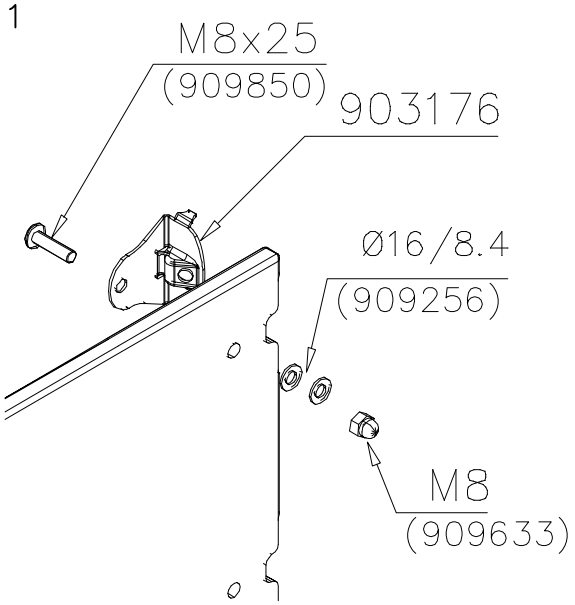

DET 2

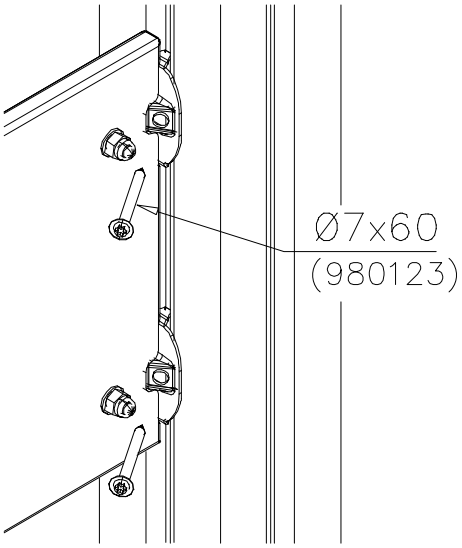

Copyright 1998 Lappset Group Ltd

LAPPSET®

SLIDE PLASTIC

DEEP FOUNDATION

DATE: 27.5.2015

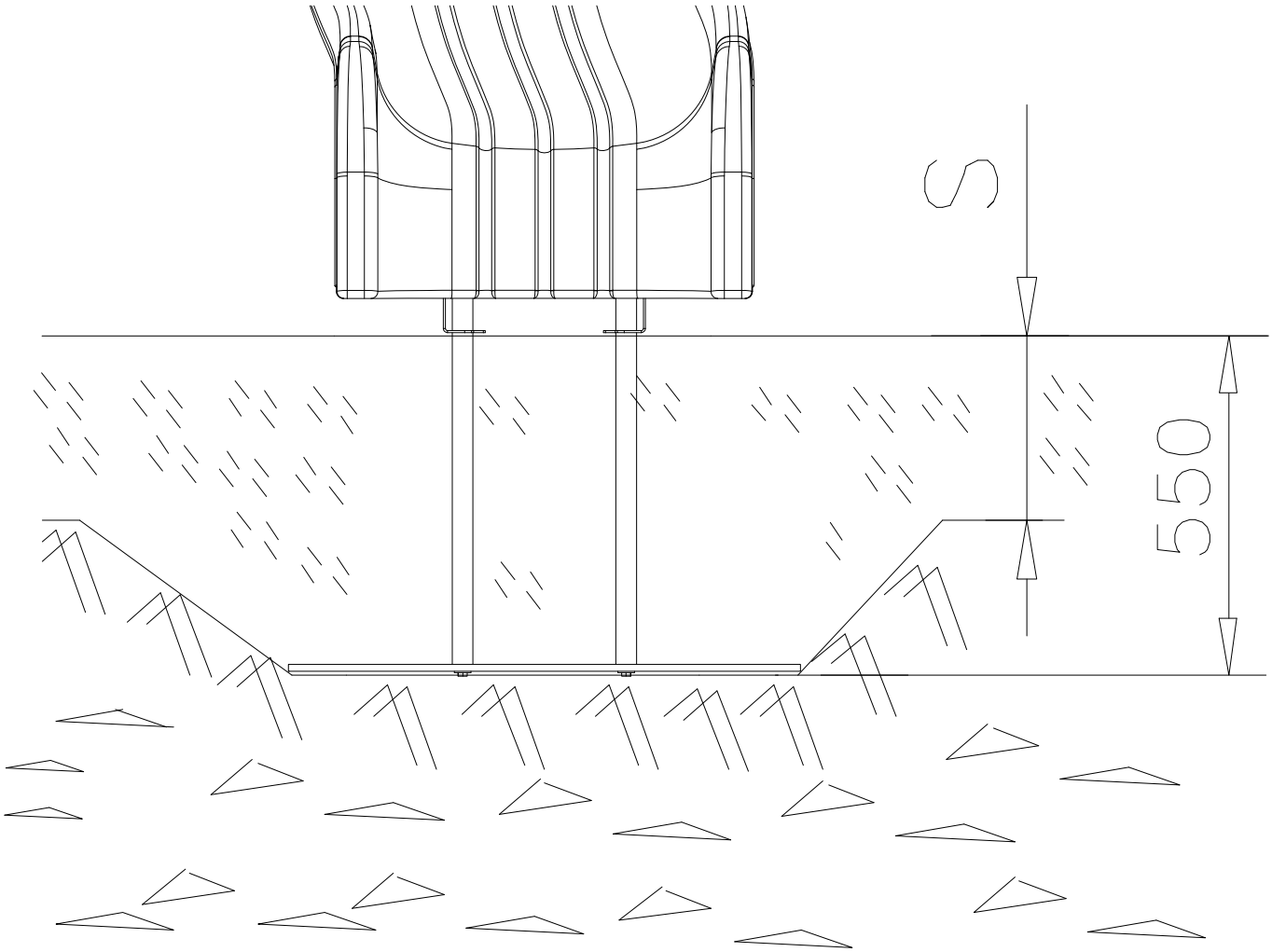

Copyright 1998 Lappset Group Ltd

LAPPSET®

SLIDE PLASTIC

DEEP FOUNDATION

DATE: 3.11.2017

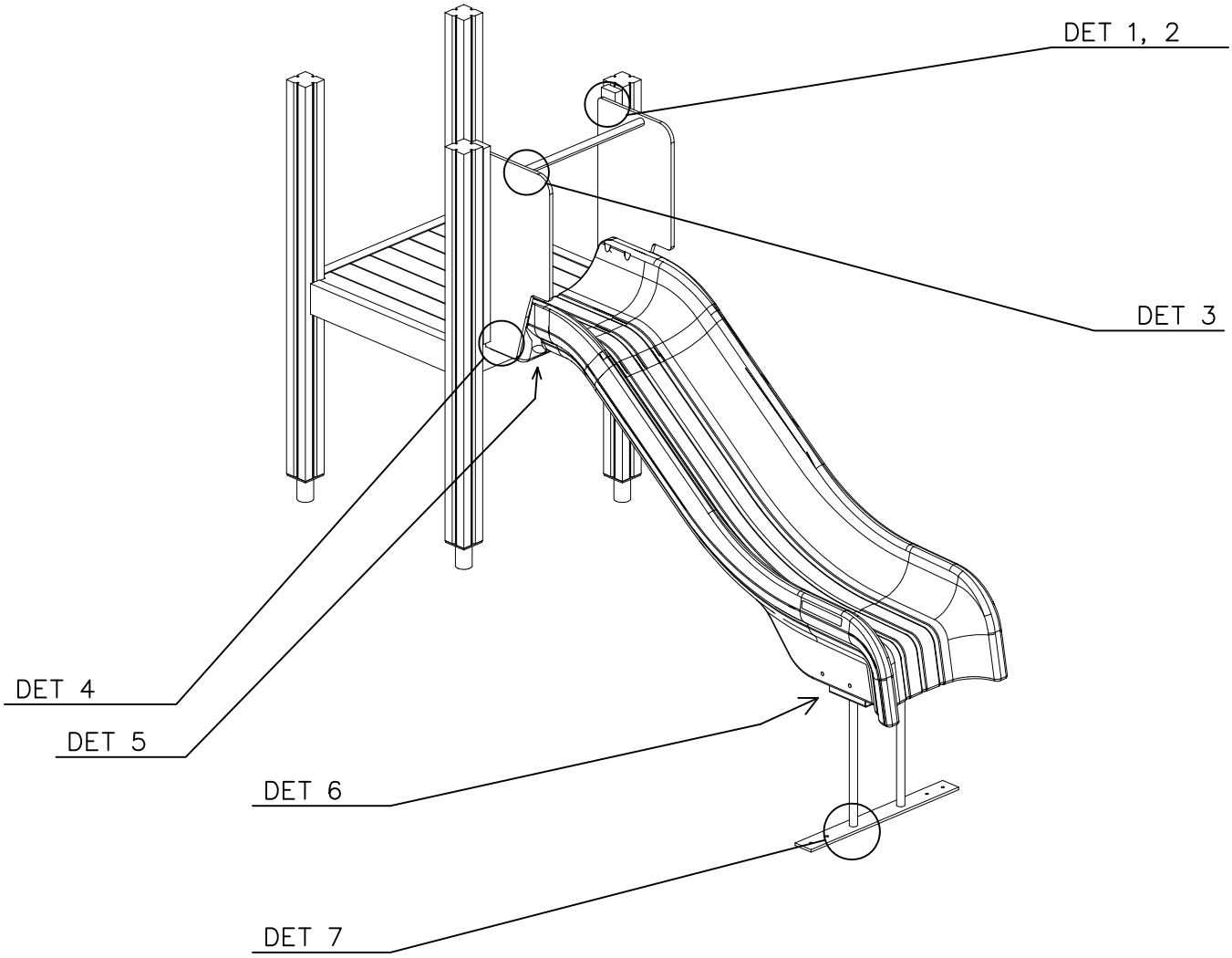

SLIDE OPTIONS

+1470 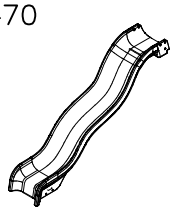	904451 GRAY 904847 YELLOW	
+870 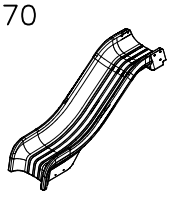	905833 GRAY 905834 YELLOW	

WALL OPTIONS

RIGHT 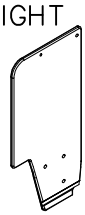	706560-701	BLUE	LEFT	706561-701	BLUE
	706560-702	YELLOW		706561-702	YELLOW
	706560-703	LIME		706561-703	LIME
	706560-704	DRARK GRAY		706561-704	DRARK GRAY
	706560-705	LIGHT GRAY		706561-705	LIGHT GRAY
	706560-706	RED		706561-706	RED
	706560-707	GREEN		706561-707	GREEN
	706560-708	FUXIA		706561-708	FUXIA

Copyright Lappset Group Ltd

LAPPSET SLIDE PLASTIC

80M DATE: 3.11.2017

SLIDE	PCS	SLIDE	PCS	706560	PCS	706561	PCS	706505	PCS	901868	PCS
	1		1		1		1		2		1
+1470		+870		RIGHT		LEFT		35x70x730		Ø34x598	
1 909876	PCS	2 903093	PCS	3 980100	PCS	4 980152	PCS	5 909852	PCS	6 900240	PCS
	2		2		12		9		6		3
M8x40		Ø8x90		Ø5x60		Ø24/8.4		M8x30		Ø8x70	
7 999561	PCS										
	1										
10g											

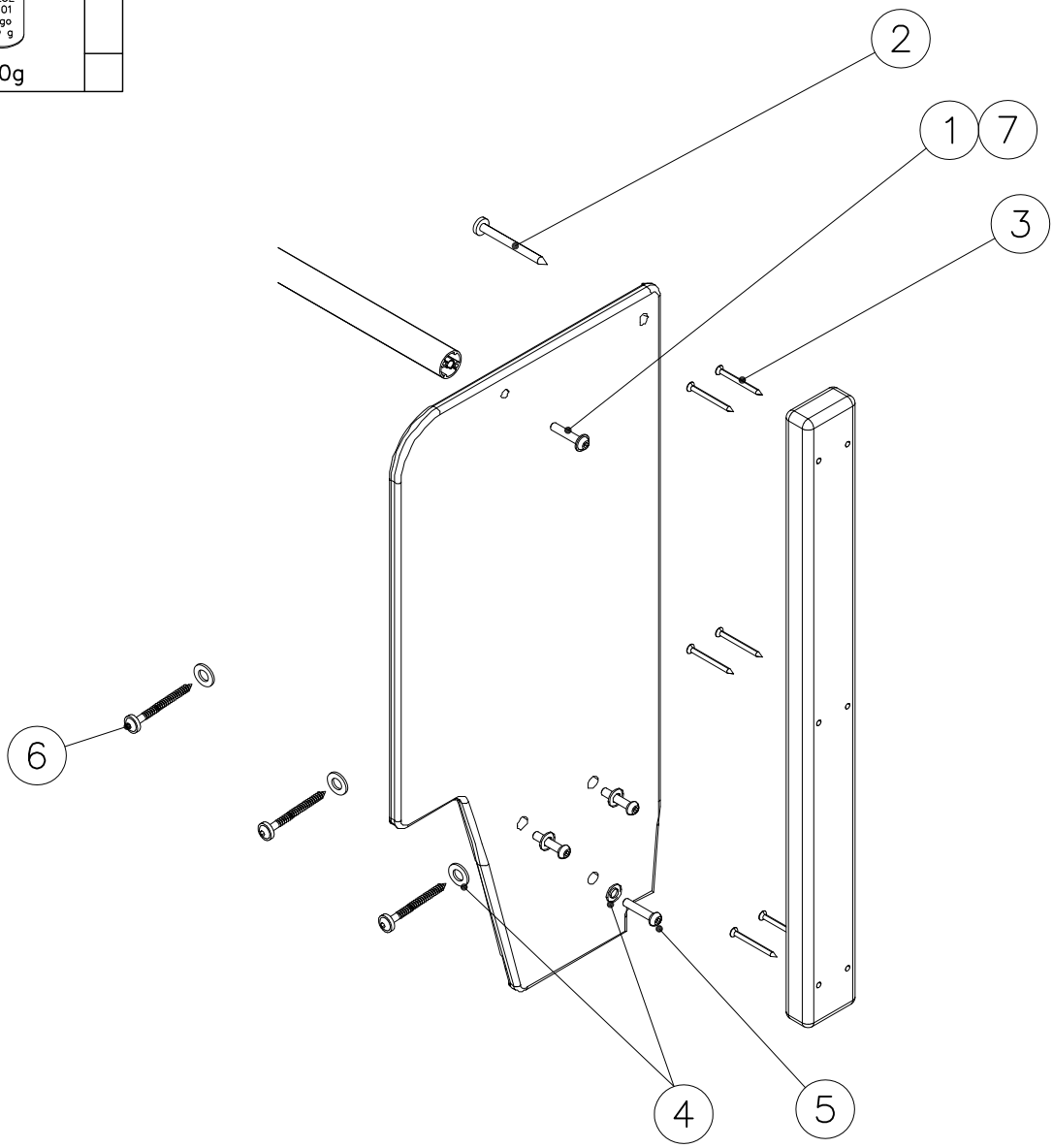

Copyright 1998 Lappset Group Ltd

LAPPSET SLIDE PLASTIC

80M DATE: 3.11.2017

DET 1

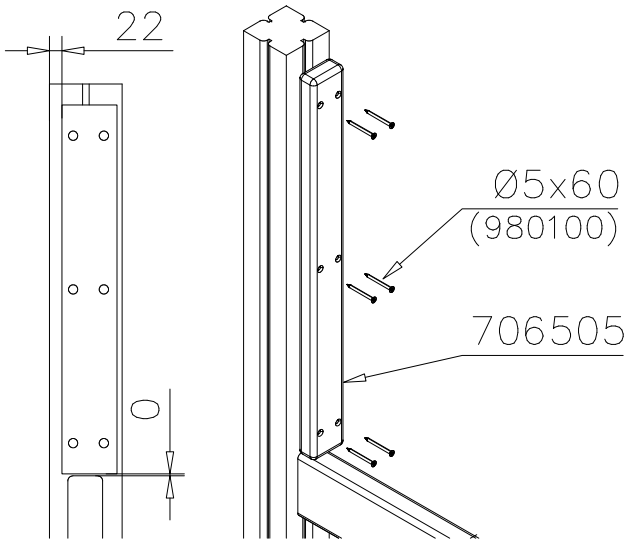

DET 2

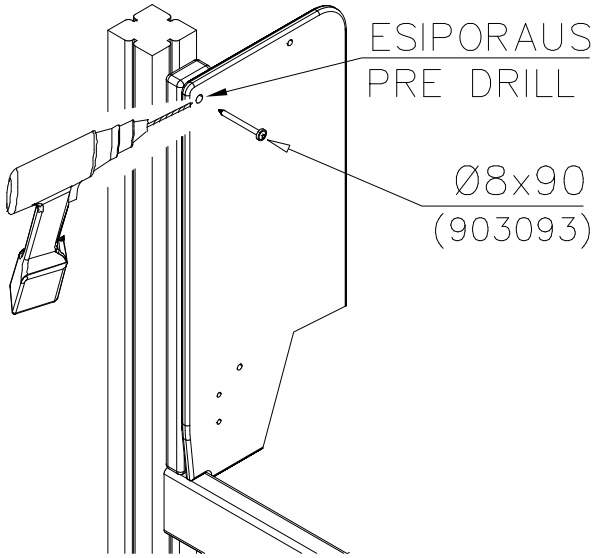

DET 3

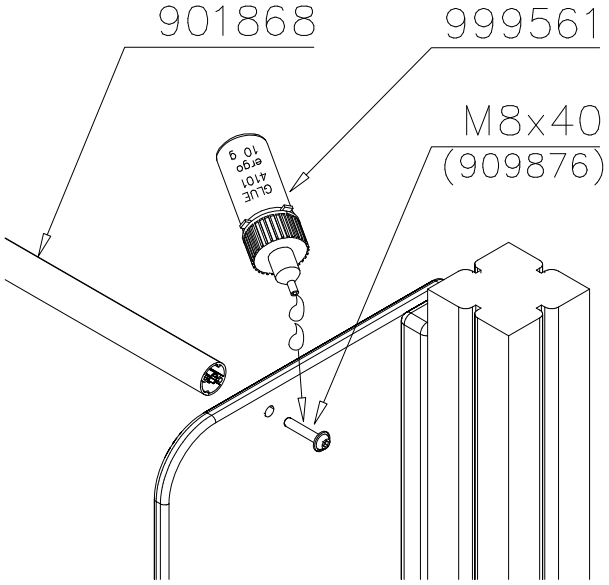

DET 4

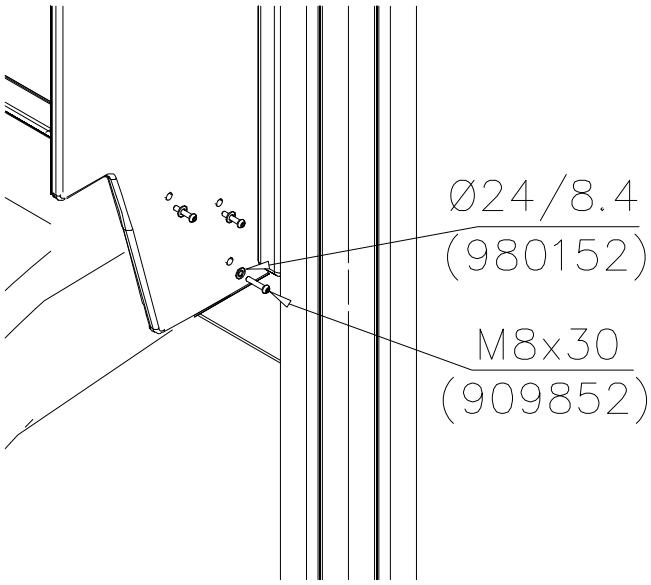

DET 5

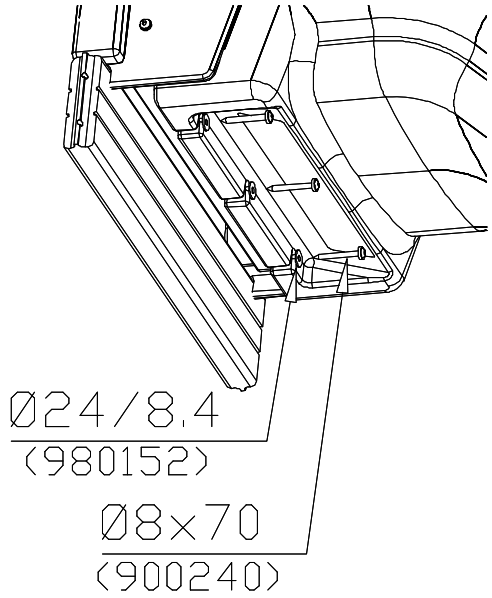

Copyright 1998 Lappset Group Ltd

LAPPSET SLIDE PLASTIC

DEEP FOUNDATION

3.11.2017

	PCS		PCS		PCS		PCS		PCS		PCS
707133	1	901868	2	908021	2	(8) 909210	4	(9) 980154	4	(10) 905051	4
10x80x745		Ø30x598				M8x40		Ø24/13		Ø24/8.4	

	PCS		PCS
(11) 909142	4	(12) 909644	4
M12x70		M12	

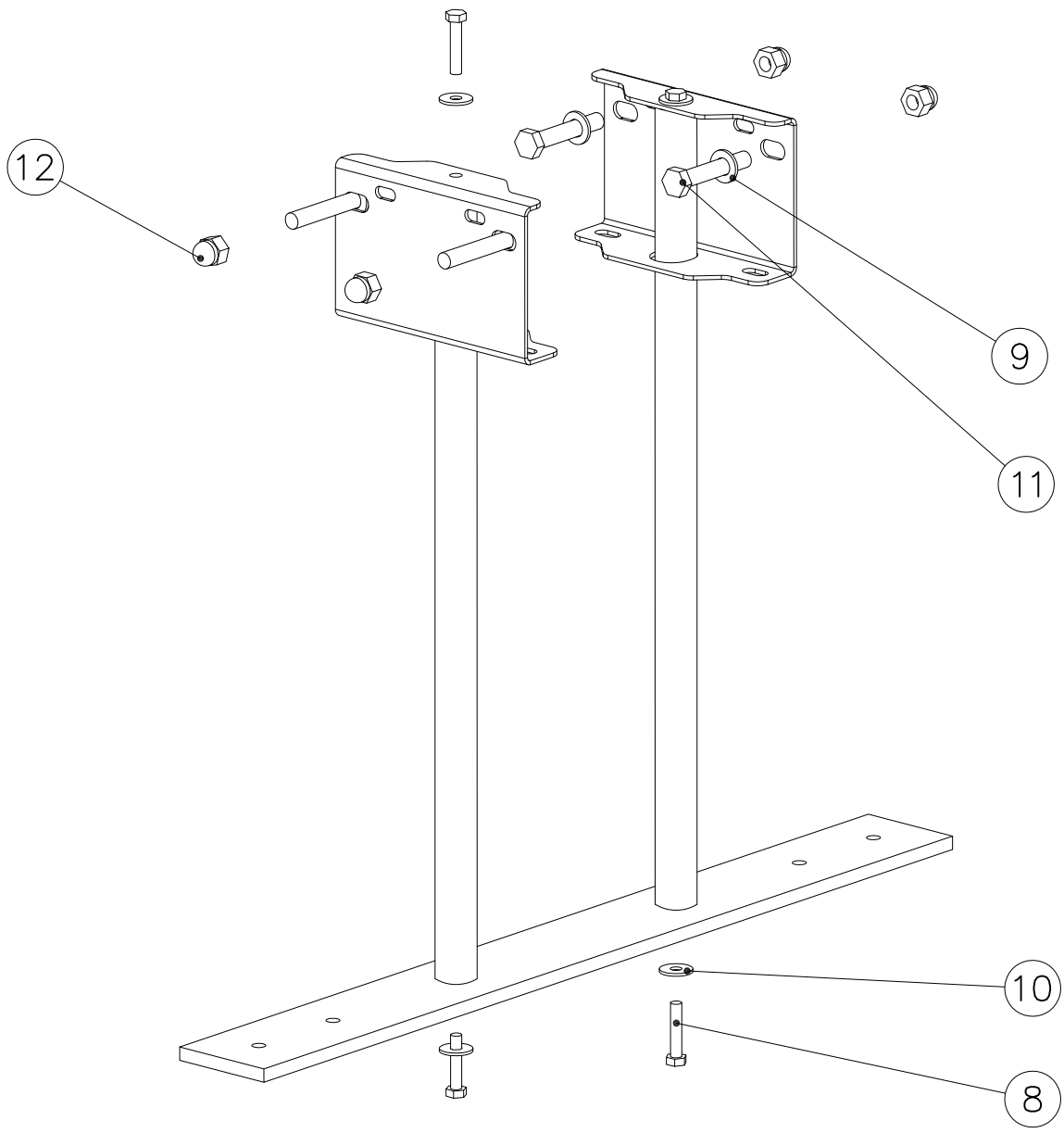

Copyright 1998 Lappset Group Ltd

LAPPSET®

SLIDE PLASTIC

DEEP FOUNDATION

DATE: 3.11.2017

DET 6

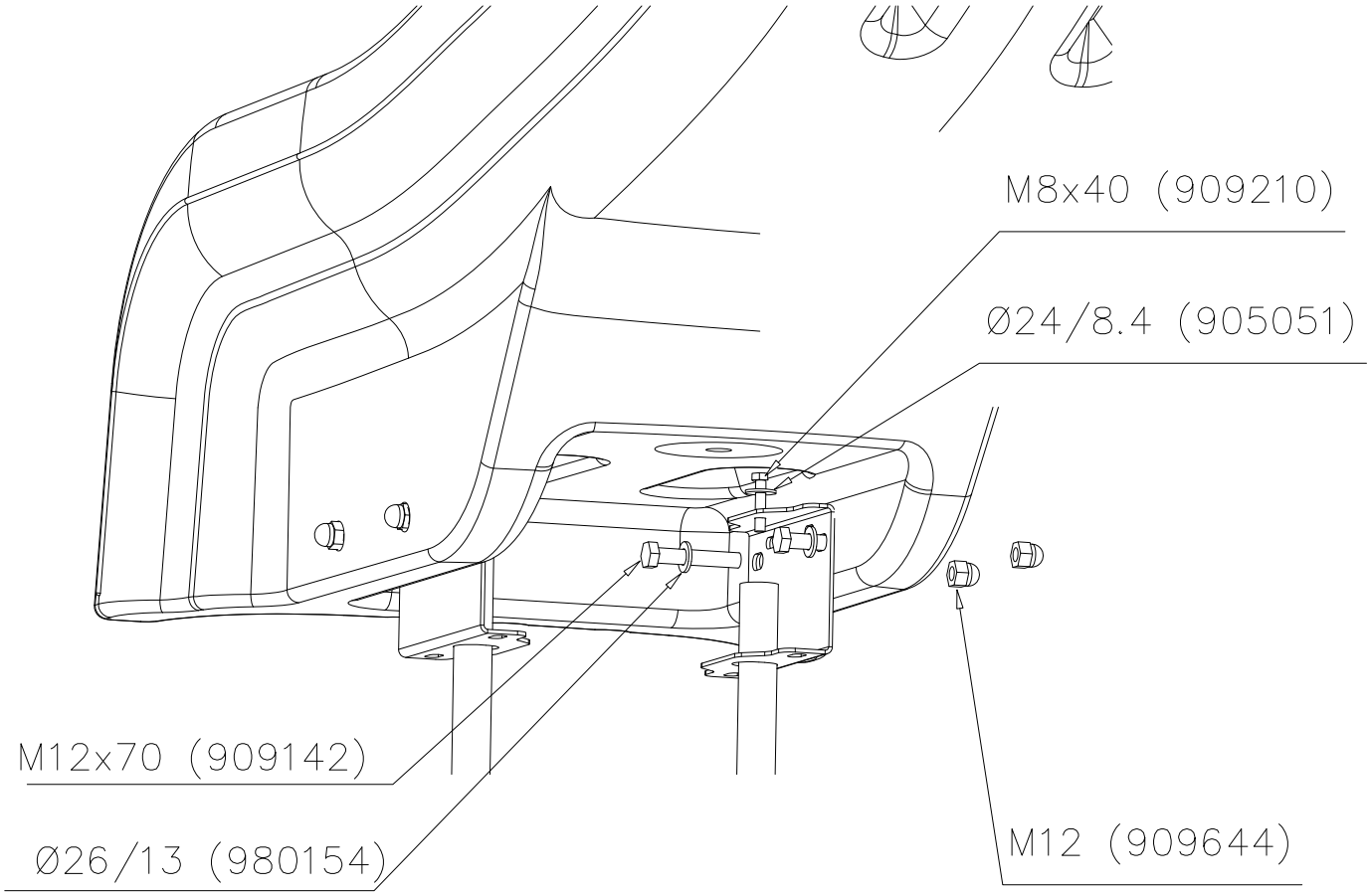

DET 7

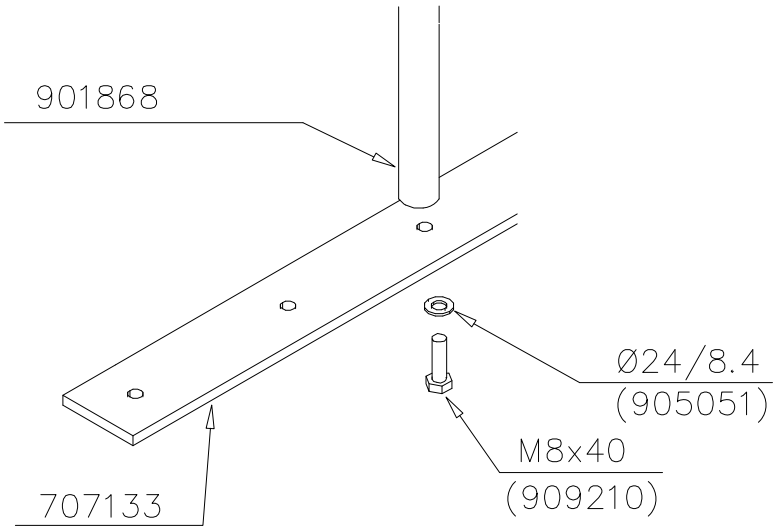

Copyright 1998 Lappset Group Ltd

LAPPSET®

707515

FINNO

DATE: 14.10.2016

		PCS
1	900240 Ø8x70	12
2	980102 Ø5x40	14

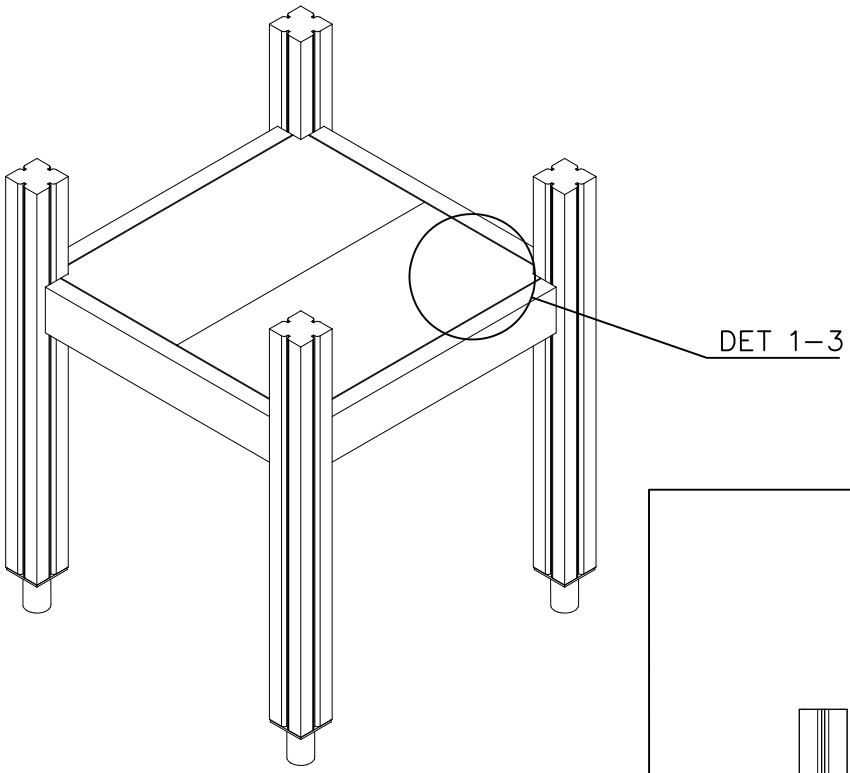

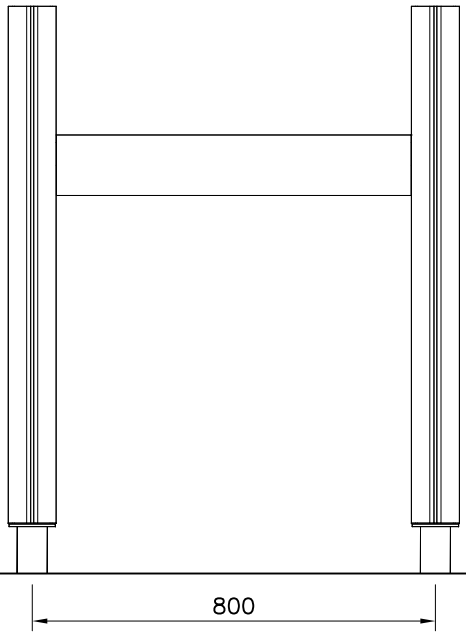

FLOOR OPTIONS

707327

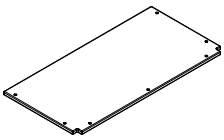

15x375x750

707327–701	BLUE
707327–702	YELLOW
707327–703	LIME
707327–704	DARK GRAY
707327–705	LIGHT GRAY
707327–706	RED
707327–707	GREEN
707327–708	FUXIA

DET 1

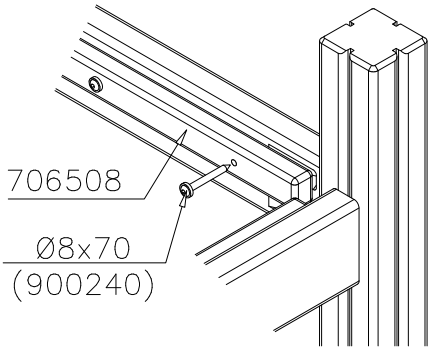

DET 2

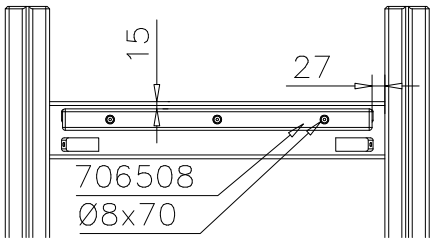

DET 3

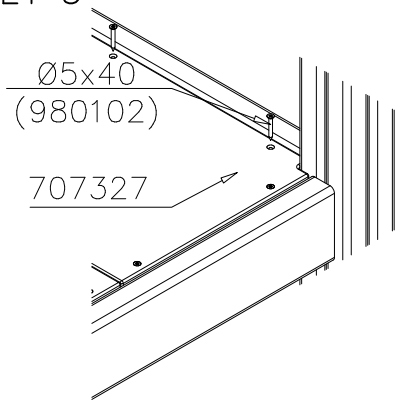

Copyright Lappset Group Ltd

LAPPSET®

707585

FINNO

DATE: 15.3.2016

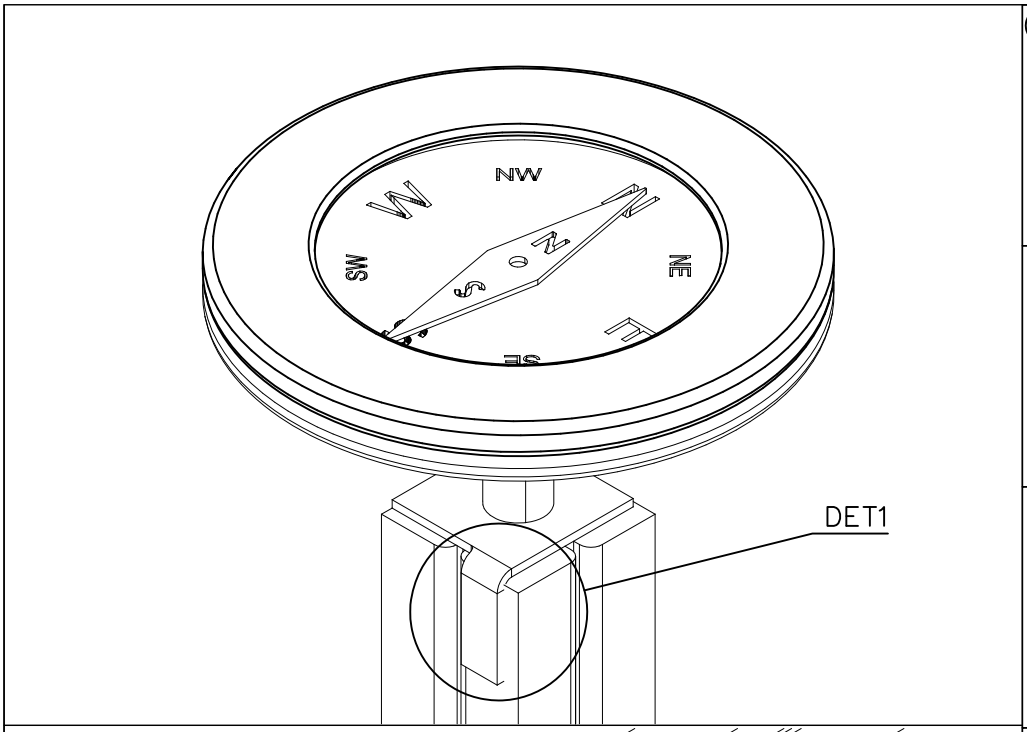

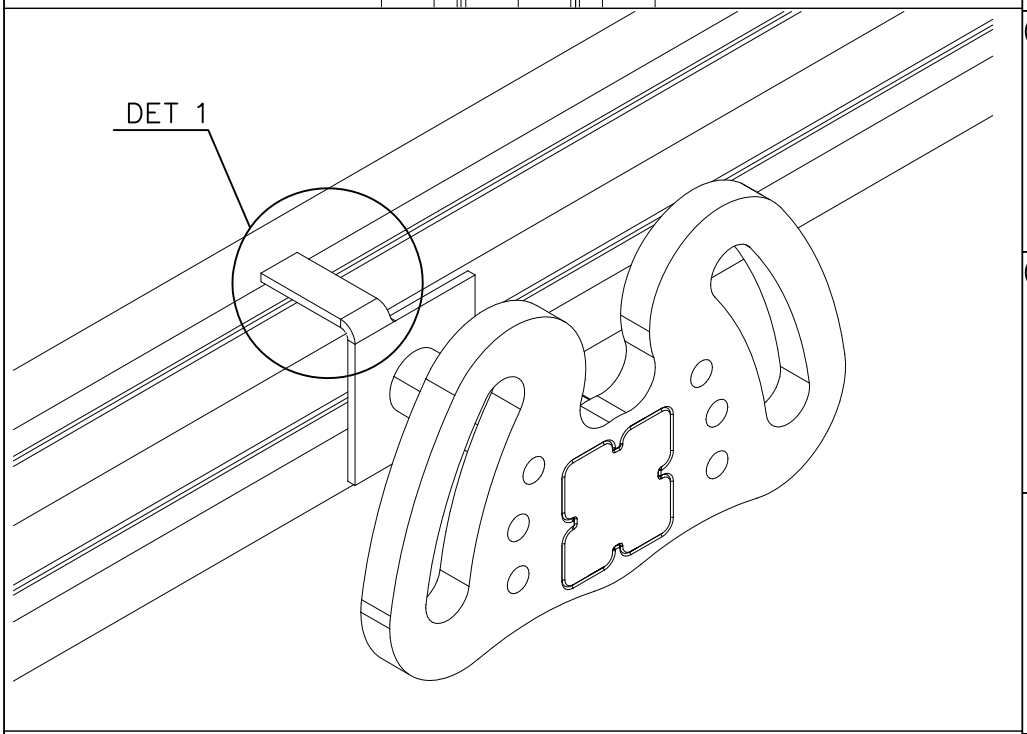

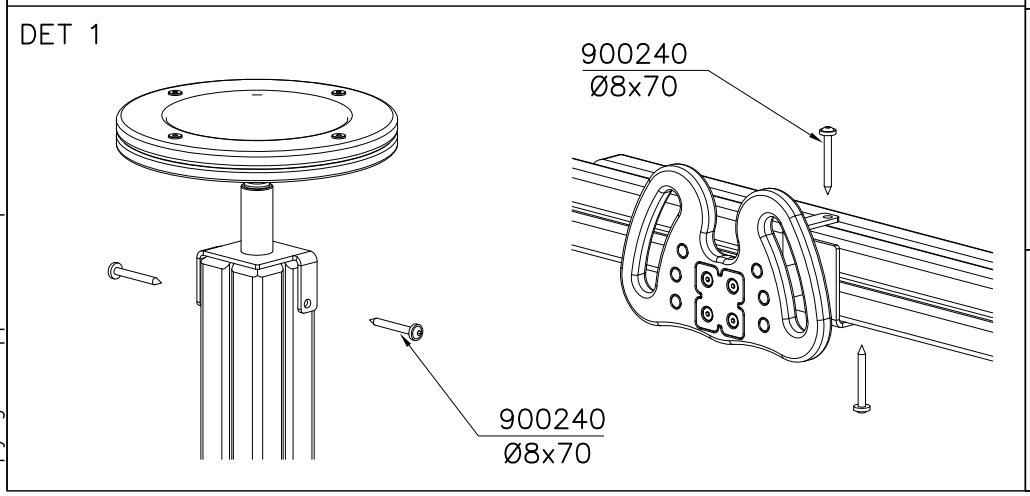

1 900240 Ø8x70	PCS 2		PCS
	PCS		PCS
	PCS		PCS
707302	PCS 1	707303	PCS 1
707304	PCS 1	707305	PCS 1
	PCS		PCS
	PCS		PCS
	PCS		PCS

Copyright Lappset Group Ltd

LAPPSET®

707792

FINNO

DATE: 23.6.2016

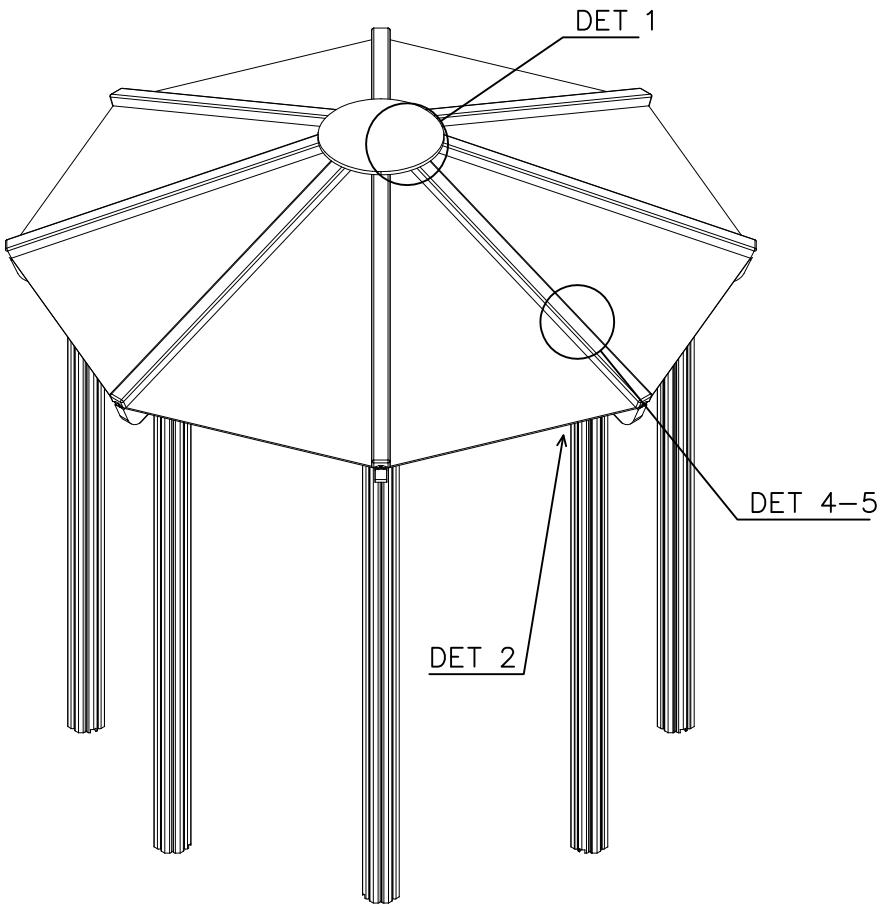

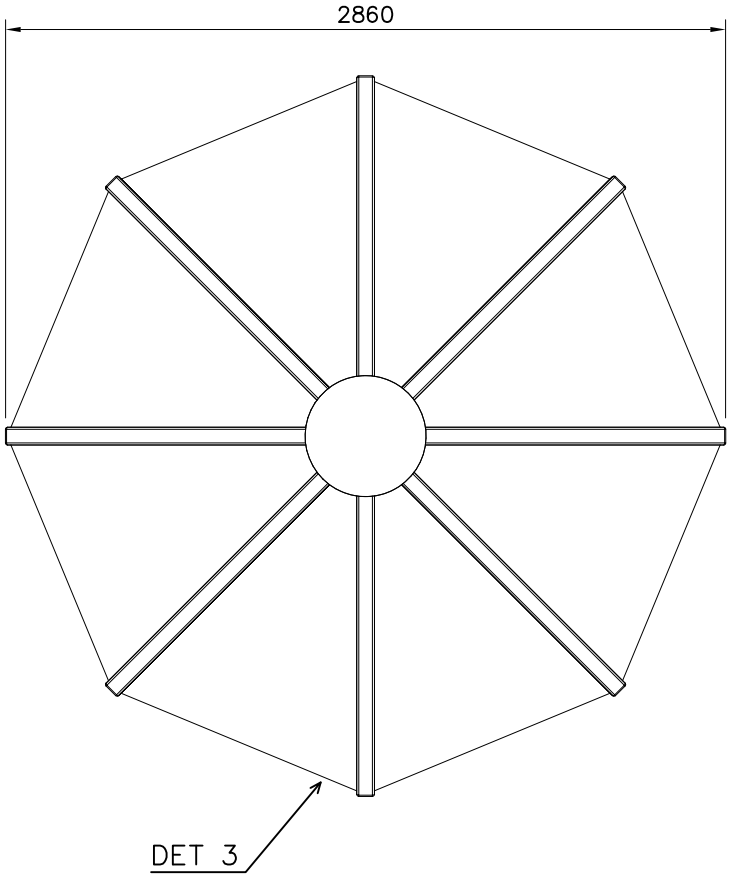

1 980100	PCS 48	2 980104	PCS 32
Ø5x60		Ø5x90	
3 909230	PCS 8	4 900208	PCS 8
8x150		M10x170	
5 905051	PCS 8	6 901302	PCS 8
Ø24/8.4		Ø20/10.5	
7 900965	PCS 8	8 903533	PCS 8
M10		SRL12 TO Ø9	
	PCS		PCS
707667	PCS 8	707688	PCS 8
10x1295x1075		45x70x1385	
707689	PCS 8	707691	PCS 1
45x145x1495		15xØ480	
707692	PCS 1		PCS
15xØ225			

Copyright Lappset Group Ltd

LAPPSET®

707792

FINNO

DATE: 23.6.2016

DET 1

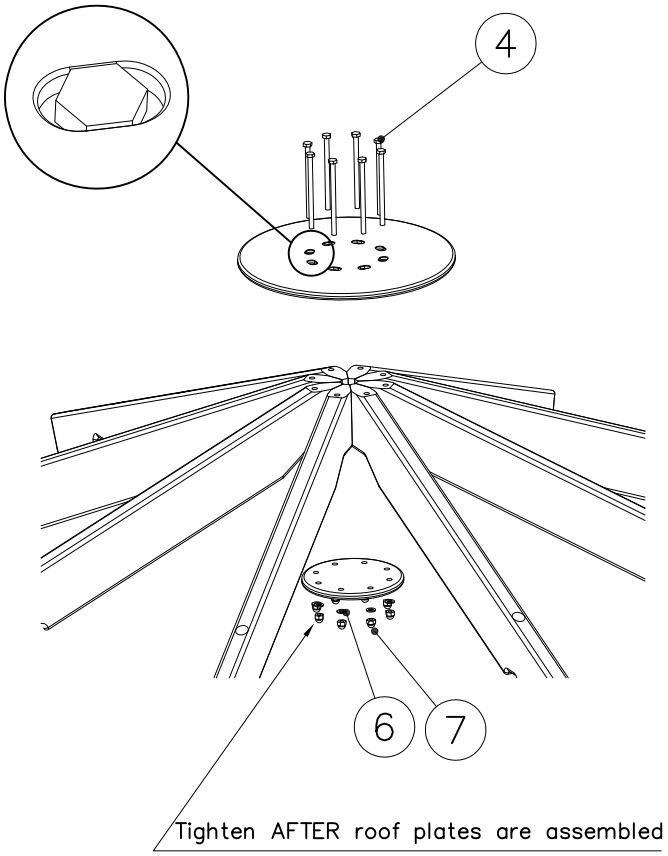

DET 2

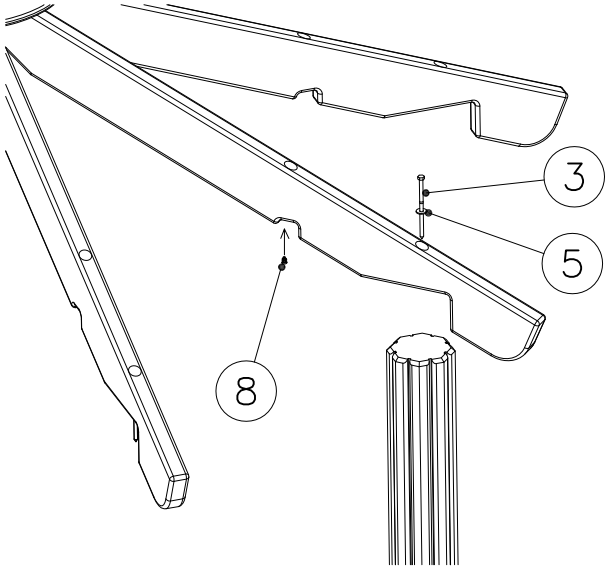

DET 3

Check measures

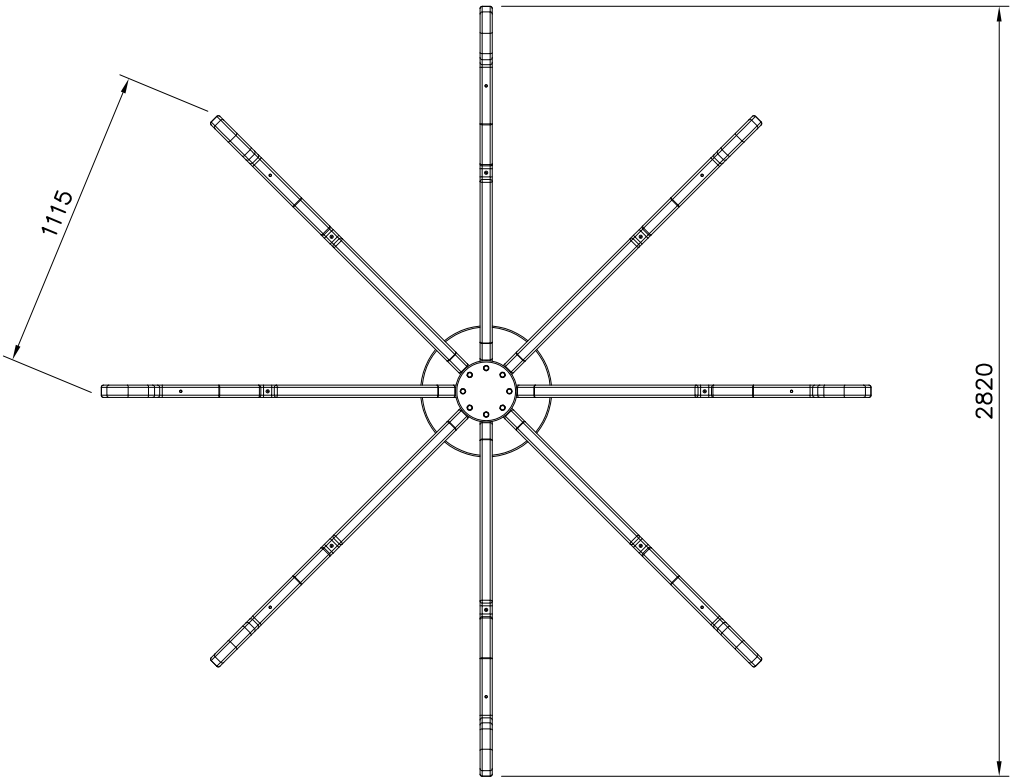

Copyright 1998 Lappset Group Ltd

LAPPSET®

707792

FINNO

DATE: 23.6.2016

DET 4

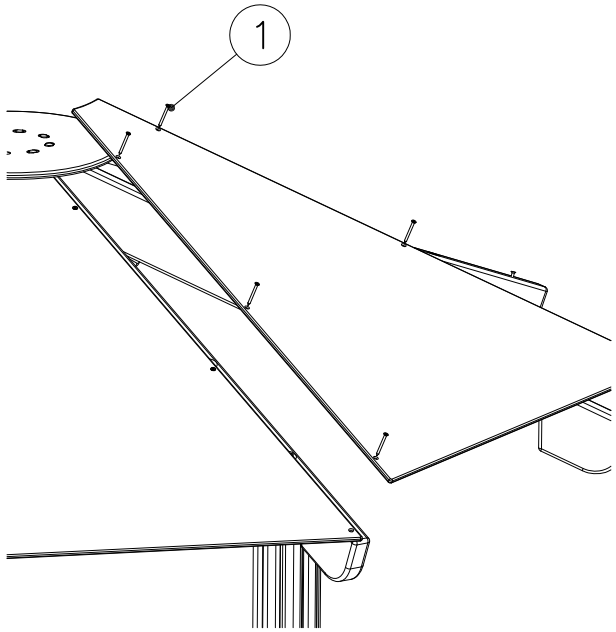

DET 5

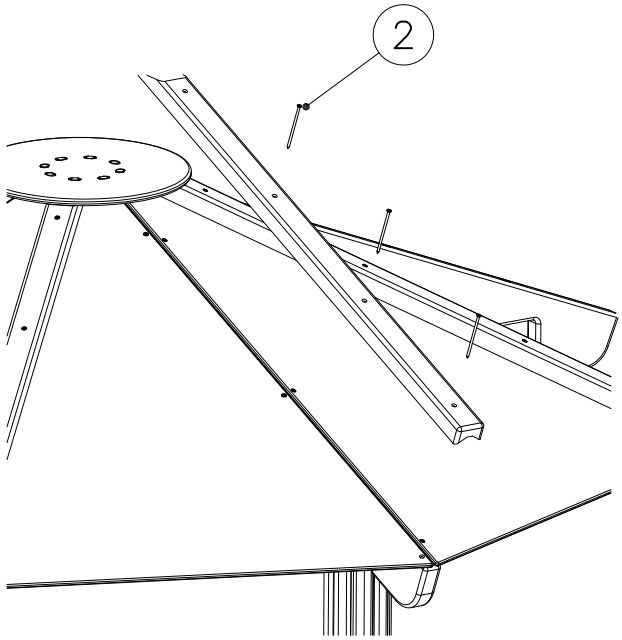

Copyright 1998 Lappset Group Ltd

1

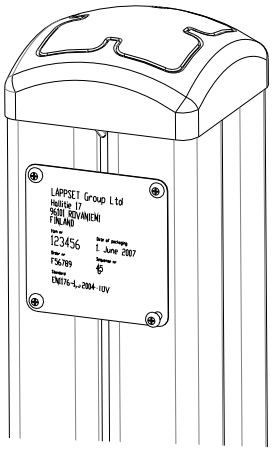

2

Tuotekyltti tulee tuotteen mukana yhdellä seuraavista tavoista:

1) Metallinen tuotekyltti ja kiinnitysruuvit

- Kiinnitä tuotekyltti ruuveilla tolppaan noin 2 metrin korkeuteen kuvan 1 mukaisesti.

2) Tuotekylttitarra

- Puhdista maalattu metalli- tai vaneripinta pölystä ja kosteudesta. Liimaa tarra kuvan 2 mukaisesti.
- Huom. Älä kiinnitä tarraa karheapintaiseen laminaattiin tai maalattuun puuhun.

Vår produktmärkning levereras på ett av följande sätt:

1) Produktskylt i metall

- Fäst skylten med de medföljande skruvarna

2) Självhäftande produktetikett

- Rengör den pulverlackerade metallytan eller laminatytan så att den blir fri från smuts och fukt. Fäst etiketten enligt fig. 2.
- Obs! Fäst ej etiketten på detaljer med skrovlig yta eller på målat trä.

Product label is delivered by one of following ways:

1) Metal product label and screws

- Fasten the label with screws.

2) Label sticker

- Clean the painted metal or plywood surface from dirt and moisture. Fasten the sticker as shown in the figure 2.
- Note. Do not attach the sticker to rough surfaced laminate or painted wood.

La plaque d’informations produit est livrée sous l’une de ces 3 formes :

1) Plaque métallique et vis

- Fixez la plaque à l’aide des vis.

2) Etiquette autocollante

- Avant de coller l’étiquette, nettoyez le composant métallique peint ou la plaque de contreplaqué, de toute saleté. La surface doit être sèche (voir image 2).
- Attention, ne pas coller l’étiquette sur une surface lamellé-collée irrégulière ou sur du bois peint.

Die Auslieferung des Produktaufklebers erfolgt auf eine dieser Arten:

1) Produkt-Schild aus Metall incl. Schrauben

- Die Befestigung des Schildes erfolgt mittels der Schrauben.

2) Aufkleber

- Entfernen Sie zunächst Schmutz und Feuchtigkeit vom lackierten Metall bzw. von der Holzoberfläche und bringen Sie den Aufkleber wie im Bild oben rechts beschrieben auf den gesäuberten Untergrund auf.
- Beachten Sie: Bringen Sie den Aufkleber nicht auf raues laminiertes oder lackiertes Holz an.

LAPPSET®

FOOT

BETON FOUNDATION

DATE: 27.10.2015

1(1)

② 905104 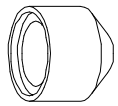 M10	PCS 4		PCS
	PCS		PCS

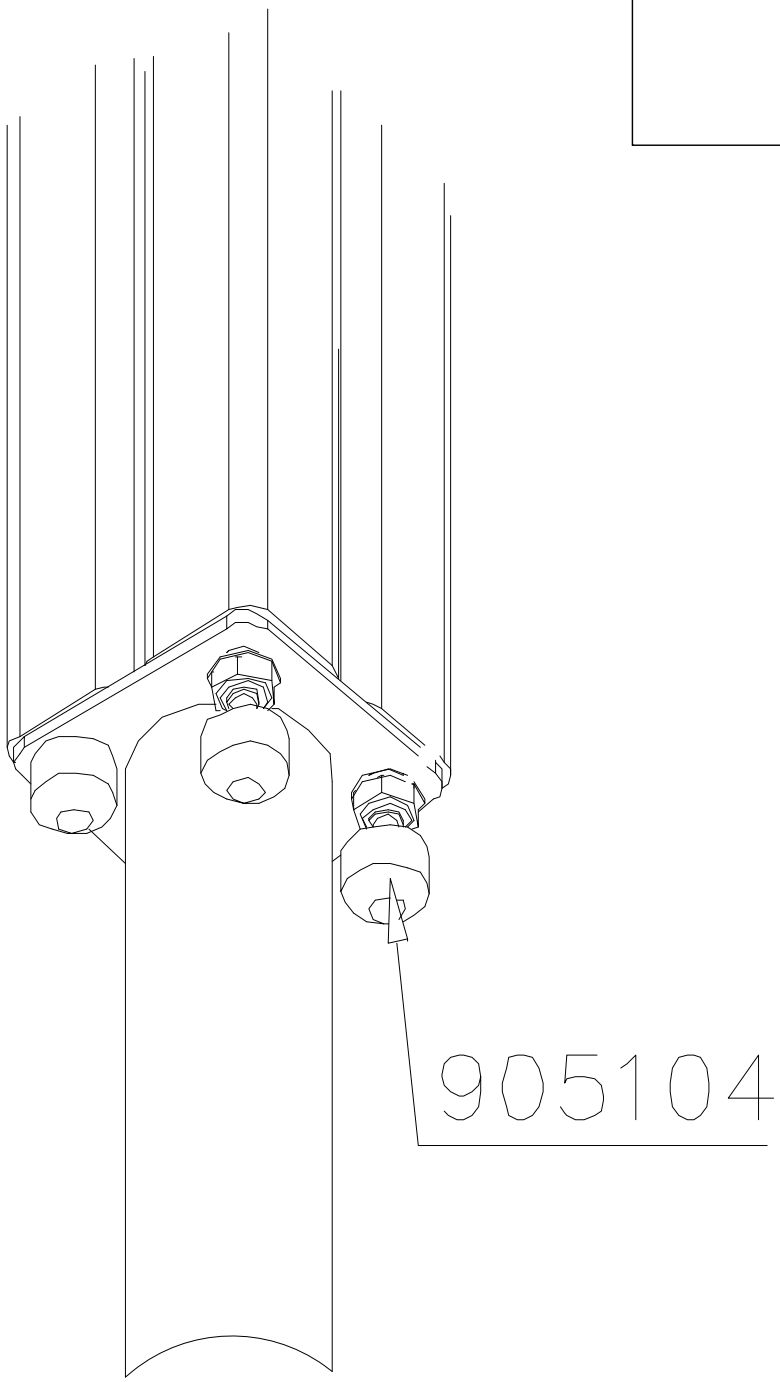

Copyright Lappset Group Ltd

LAPPSET®

FINNO

A10196

DATE: 11.9.2017

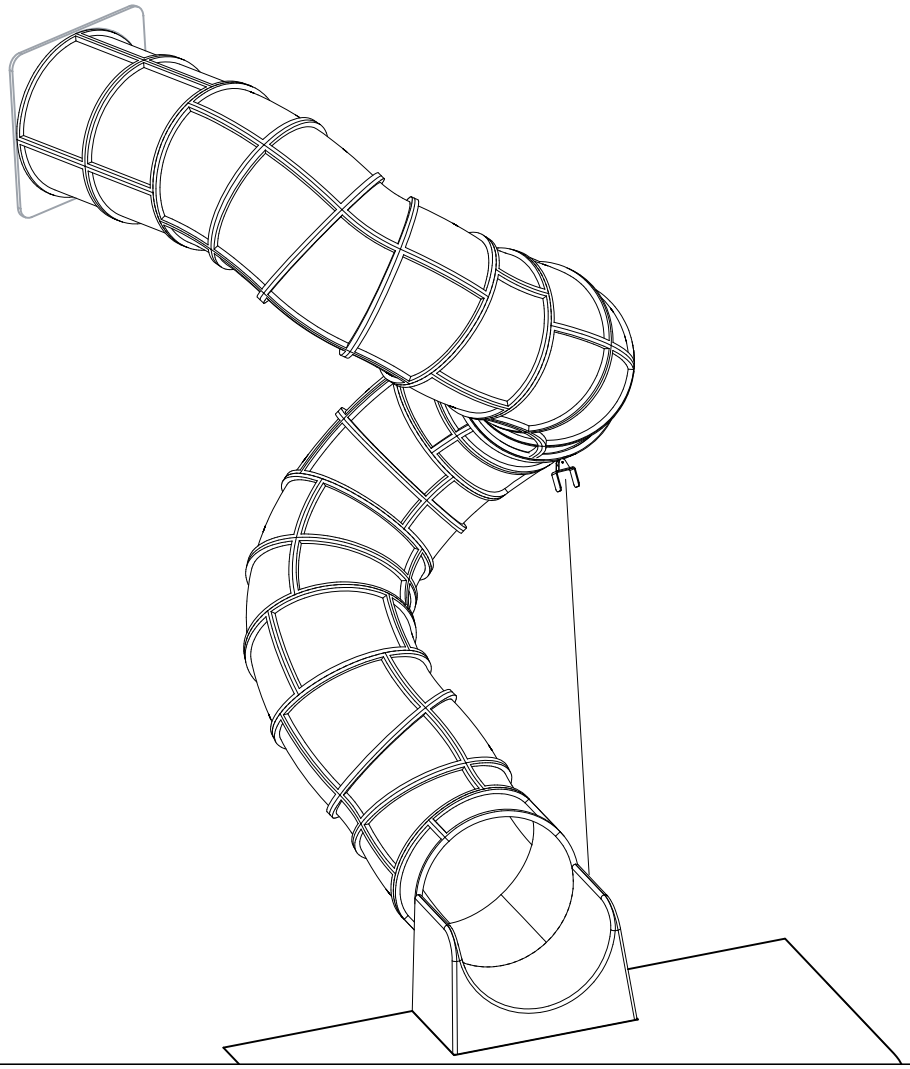

1 : 100

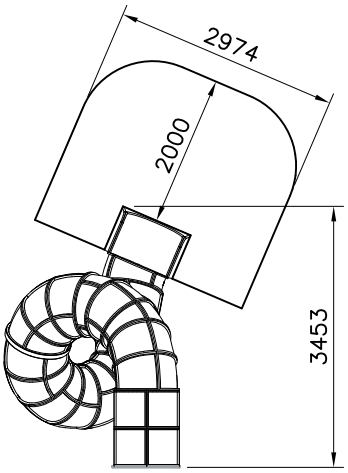

1 : 100

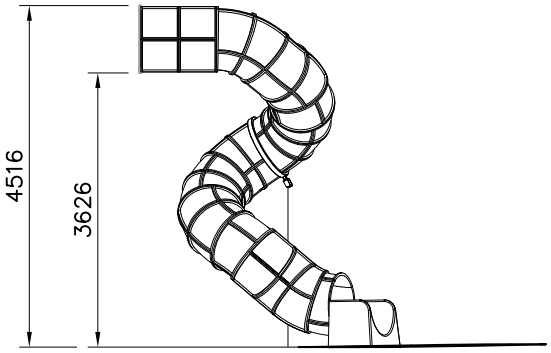

Copyright Lappset Group Ltd

LAPPSET®

FINNO

A10196

DATE: 11.9.2017

3a

004914	PCS	707918–705	PCS	900240	PCS	903533	PCS	905086	PCS	905112	PCS
	1	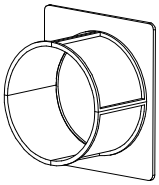	1	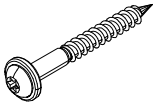	14	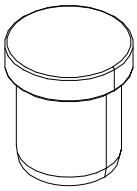	6		4	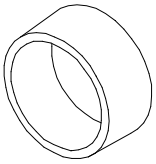	1024
				Ø8x70		SRL12		Ø44/13.5		BLACK Ø22	
905801	PCS	905811	PCS	905821	PCS	905829	PCS	905831	PCS	905850	PCS
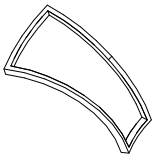	36	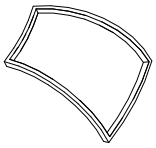	36	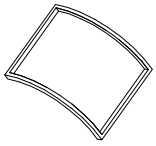	2	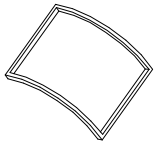	2		952	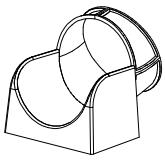	1
GREY		GREY		GREY		TRANSPARENT		BLACK			
905859	PCS	905860	PCS	909205	PCS	909248	PCS	909274	PCS	980150	PCS
	2	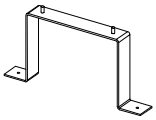	2		476		4		4	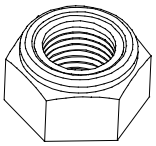	480
6x80x850				8x60		M12		8x30		M8	
980151	PCS		PCS		PCS		PCS		PCS		PCS
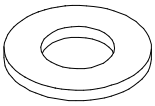	8										
Ø16/8.4											
	PCS		PCS		PCS		PCS		PCS		PCS
	PCS		PCS		PCS		PCS		PCS		PCS
	PCS		PCS		PCS		PCS		PCS		PCS

Copyright Lappset Group Ltd

LAPPSET®
FINNO

A10196

DATE: 11.9.2017

4a

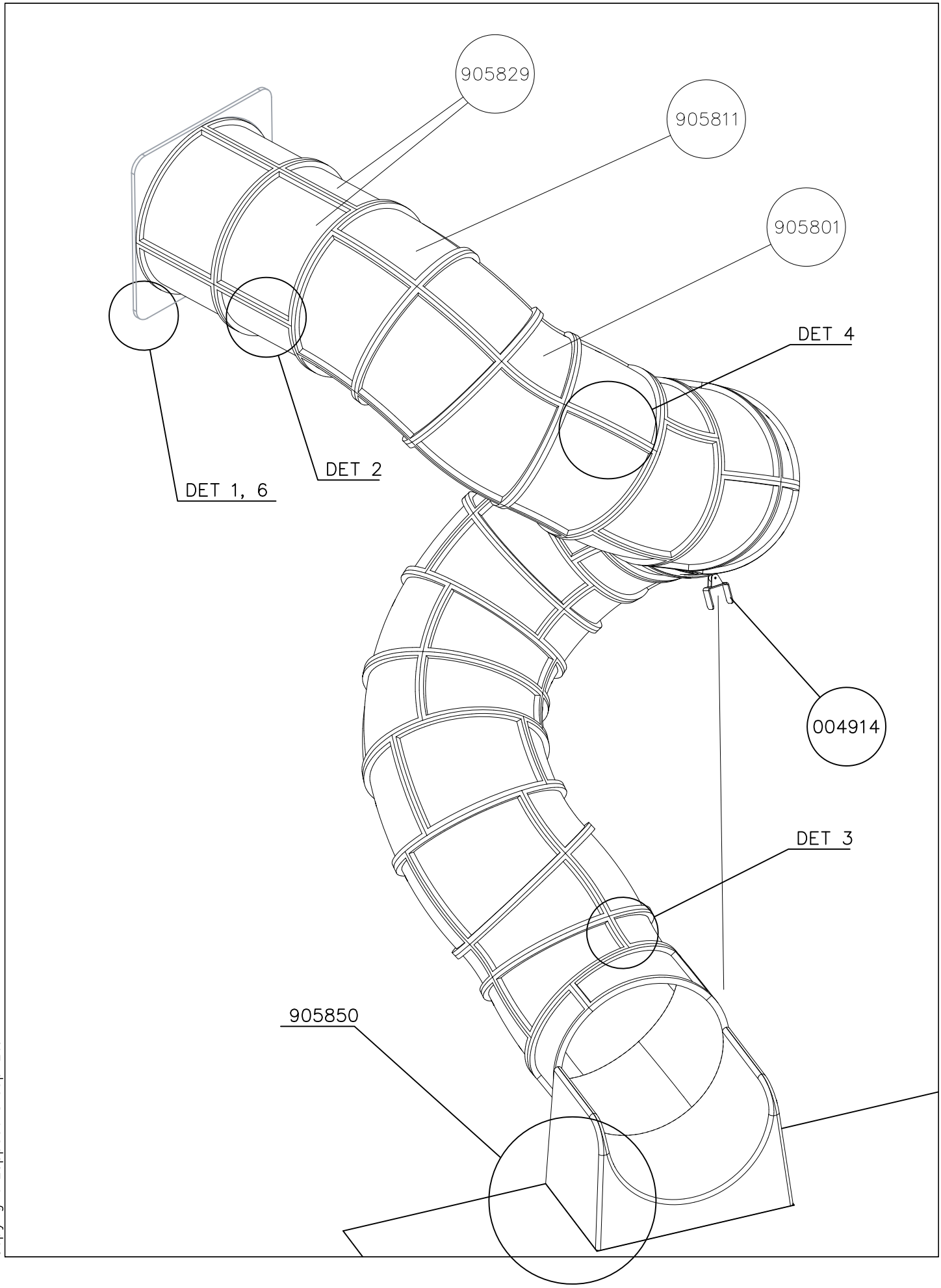

Copyright Lappset Group Ltd

LAPPSET®

FINNO

A10196

DATE: 11.9.2017

4b

905850

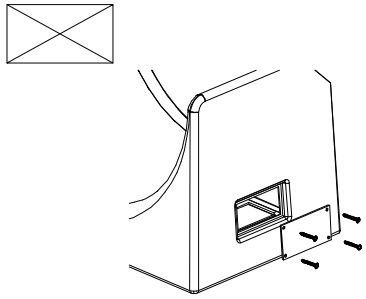

Access– and maintenance panel. Asennus– ja huolto luukku.

905850

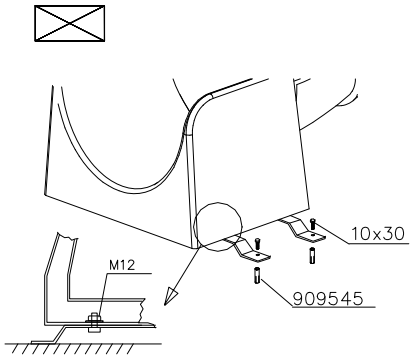

905850

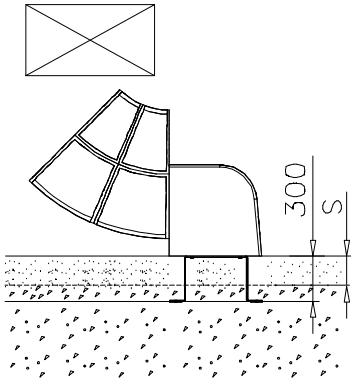

905850

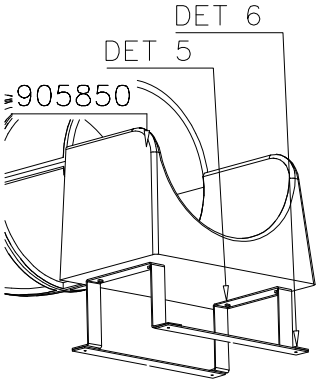

905850

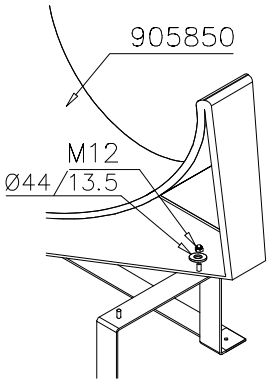

905850

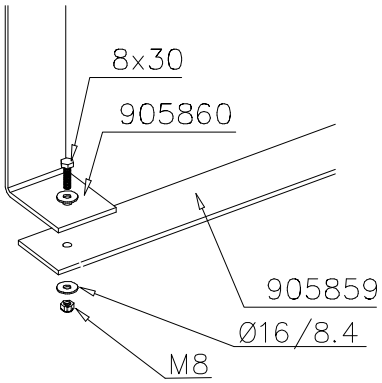

Copyright Lappset Group Ltd

LAPPSET®
FINNO

TUBE INSTALLATION GENERAL

PLATE AND RINGS

DATE: 1.6.2016

DET 1

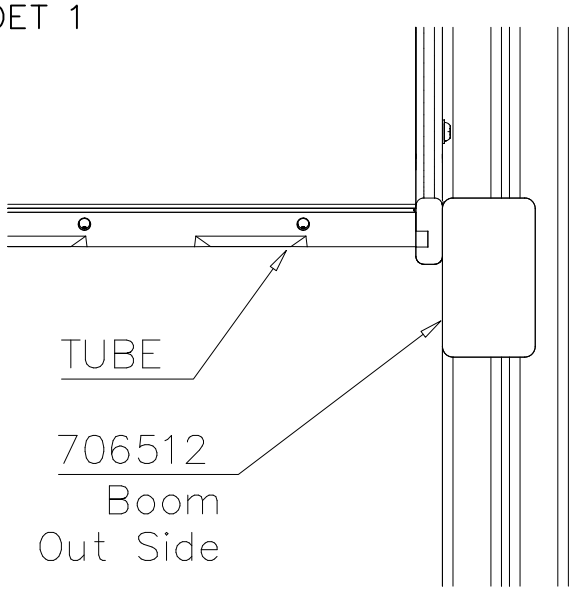

DET 2

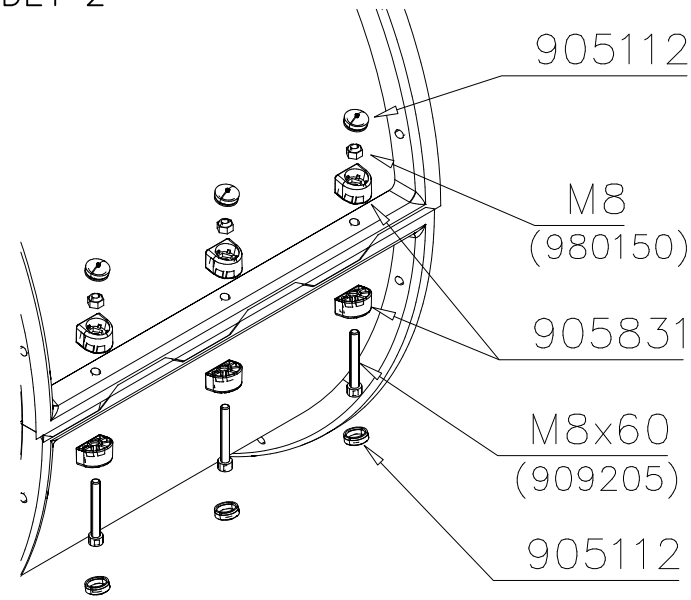

DET 3

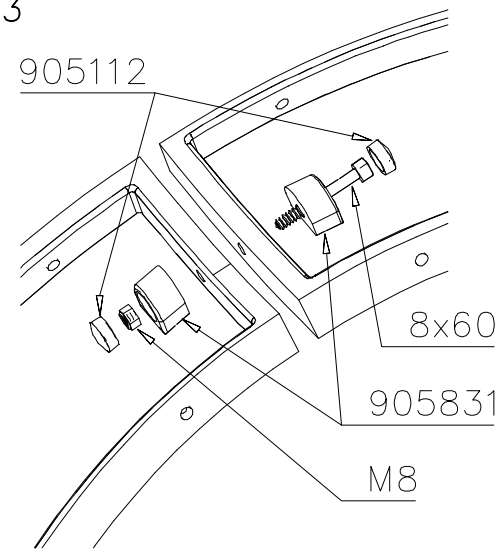

DET 4

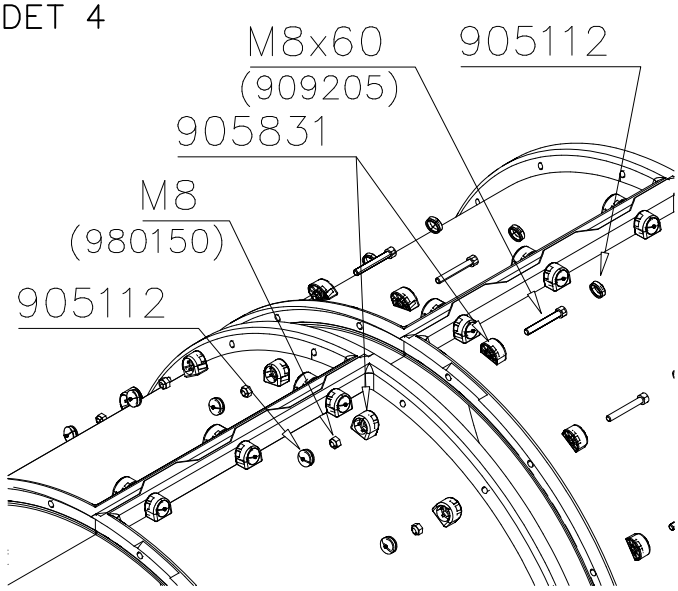

DET 5

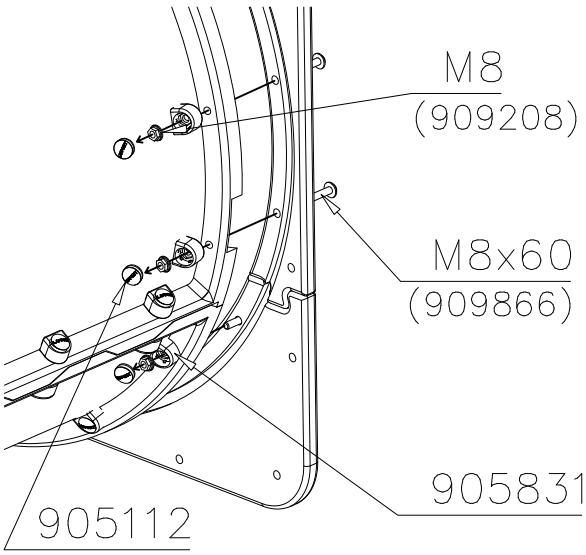

DET 6

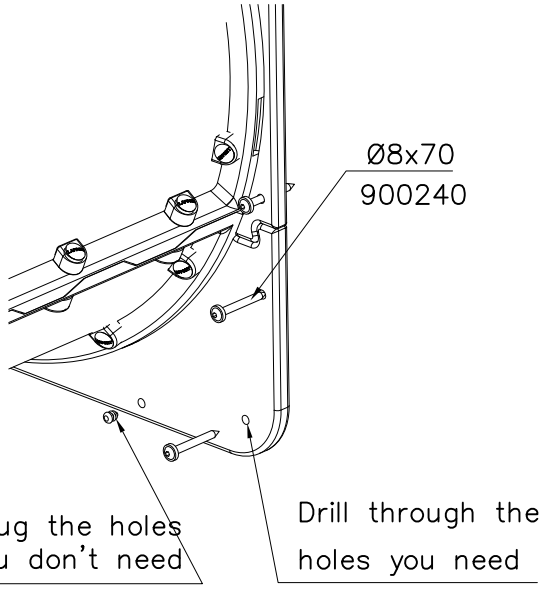

Copyright 1998 Lappset Group Ltd

LAPPSET®

FINNO

A10196

DATE: 11.9.2017

5a

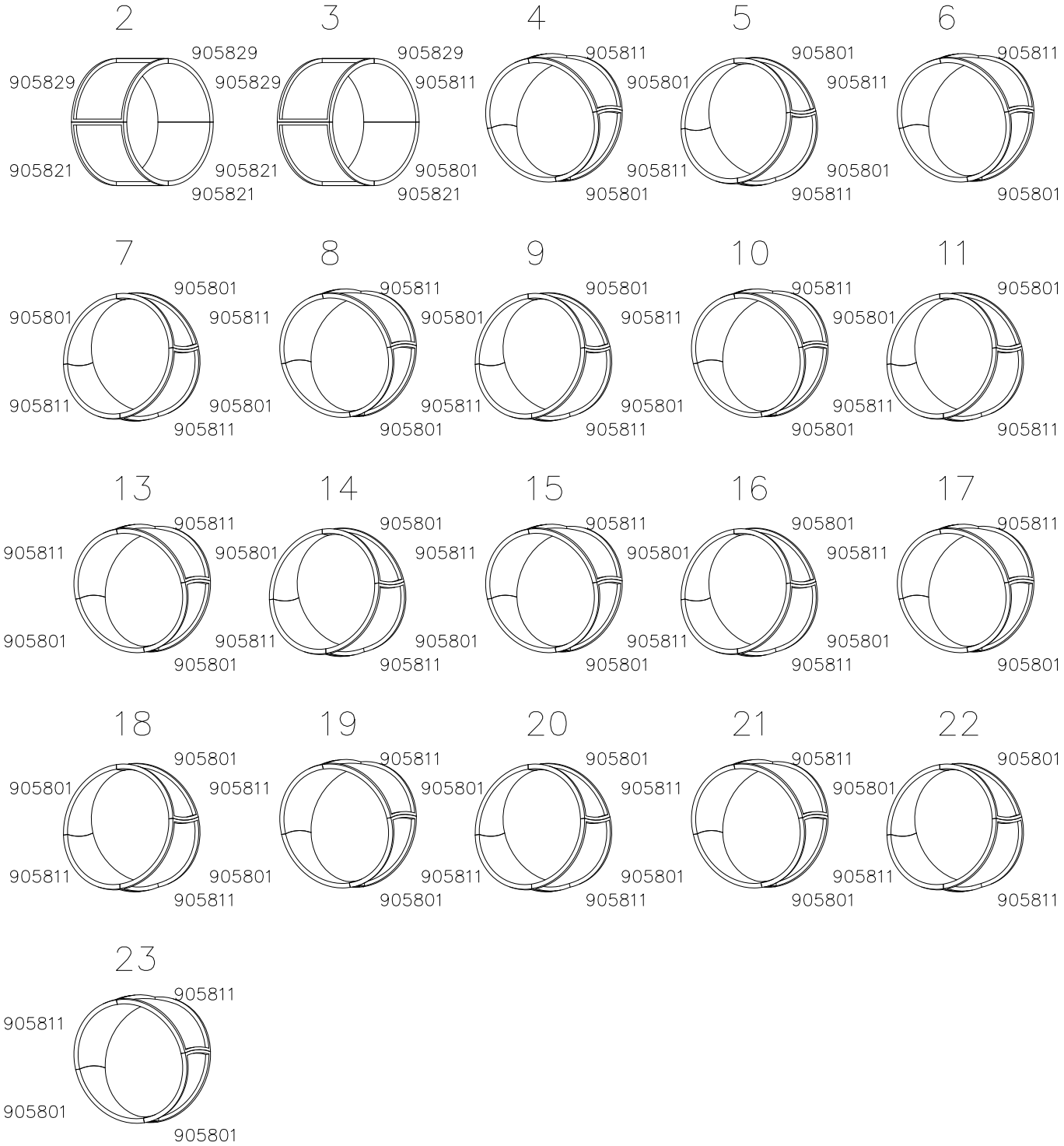

Copyright Lappset Group Ltd

LAPPSET®

FINNO

A10196

DATE: 11.9.2017

6a

Esimerkki putken kokoamisesta
Example of installation

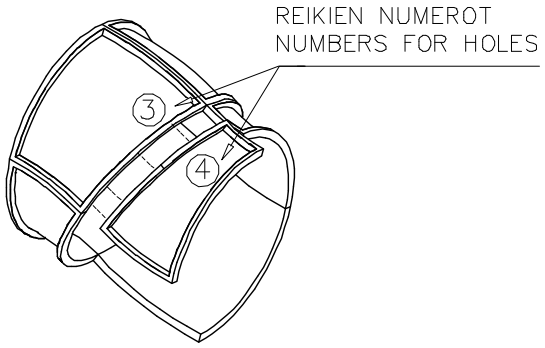

LIUKUPINTAAN EI SAA TULLA LÄPINÄKYVIÄ MODUULEJA!!

NO TRANSPARENT PIECES ON SLIDING SURFACE!!

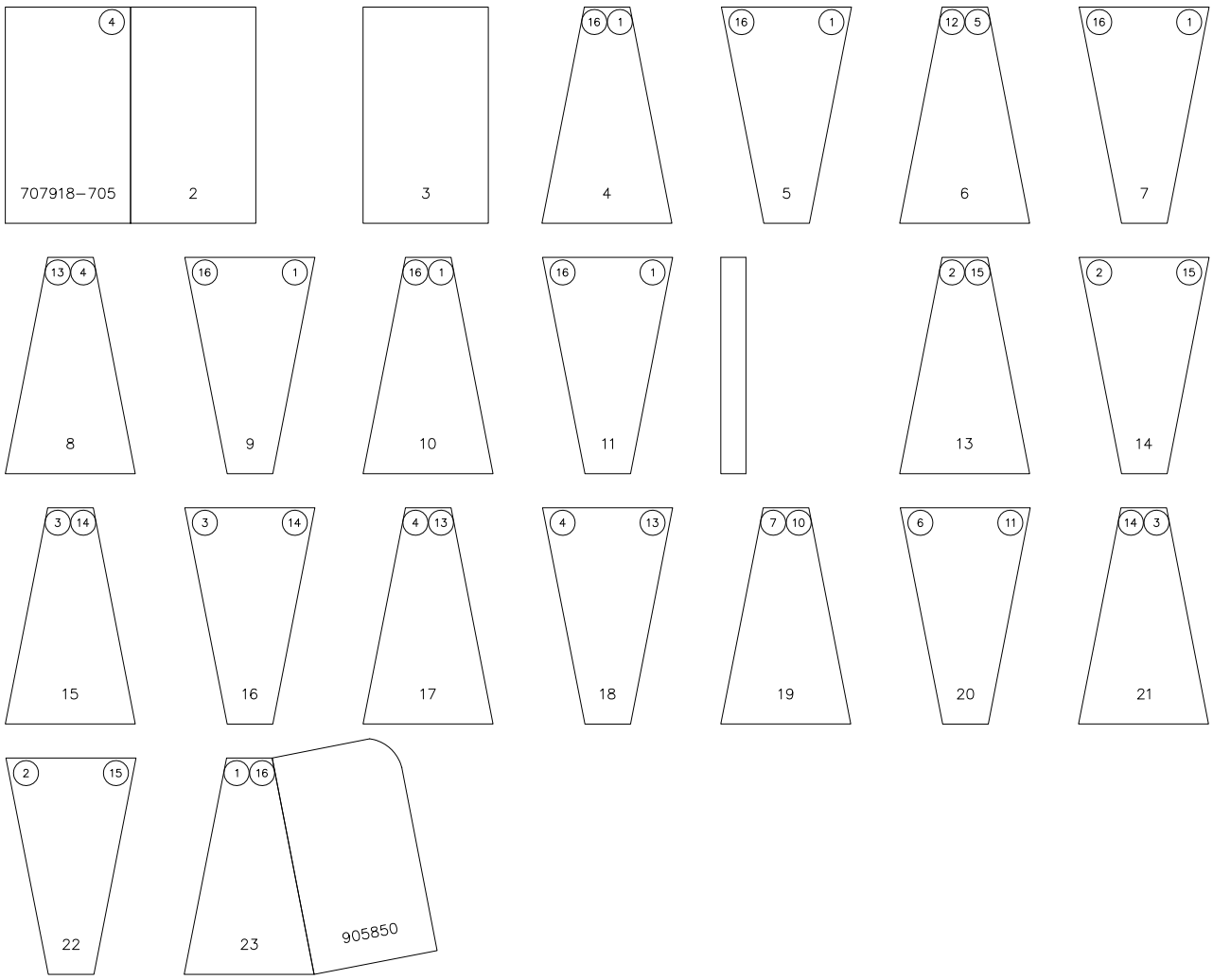

Position of the box: 127 degrees

Copyright Lappset Group Ltd

LAPPSET®
FINNO

A10196

DATE: 11.9.2017

7a

Valmiiksi kasattujen osien osakokoonpanot ja vara-osa listat.

Ready installed component subassemblies and spare part list.

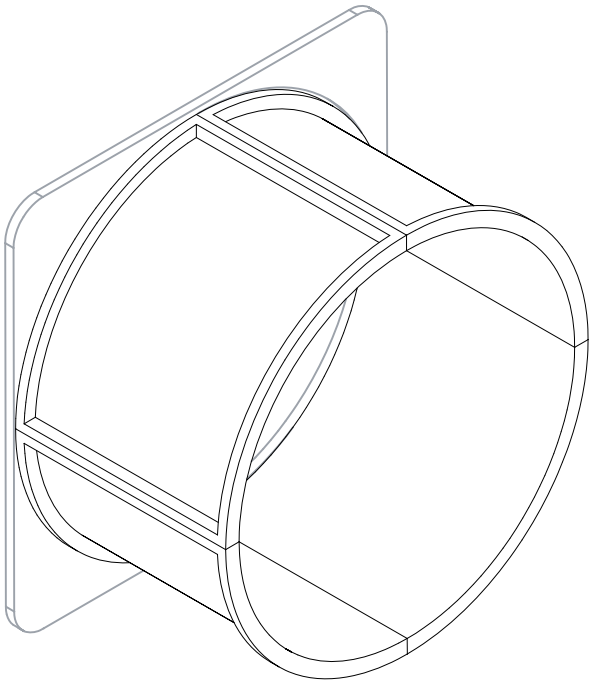

2

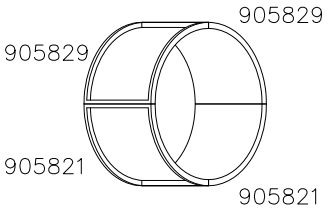

707918–705	909205 x 12	980150 x 12
905831 x 40	909208 x 16	909119 x 16

23

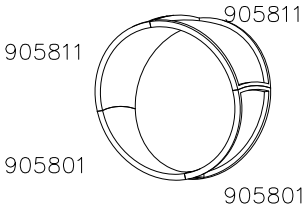

		909252 x 13
		700413 x 1
909205 x 16 909206 x 8	980150 x 16	905831 x 32
905850	909208 x 8	980151 x 8

Position of the box: 127 degrees

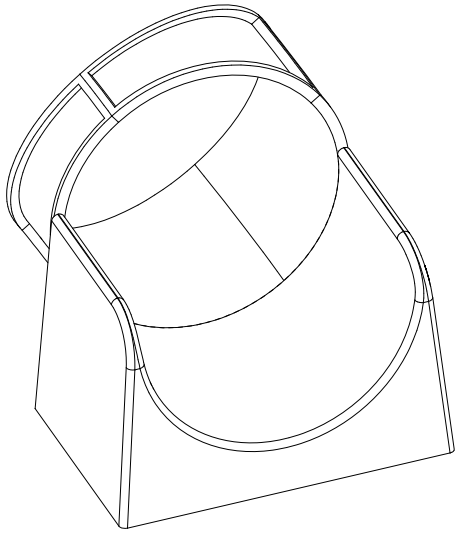

Copyright Lappset Group Ltd

LAPPSET®

finno

A10197

DATE: 11.9.2017

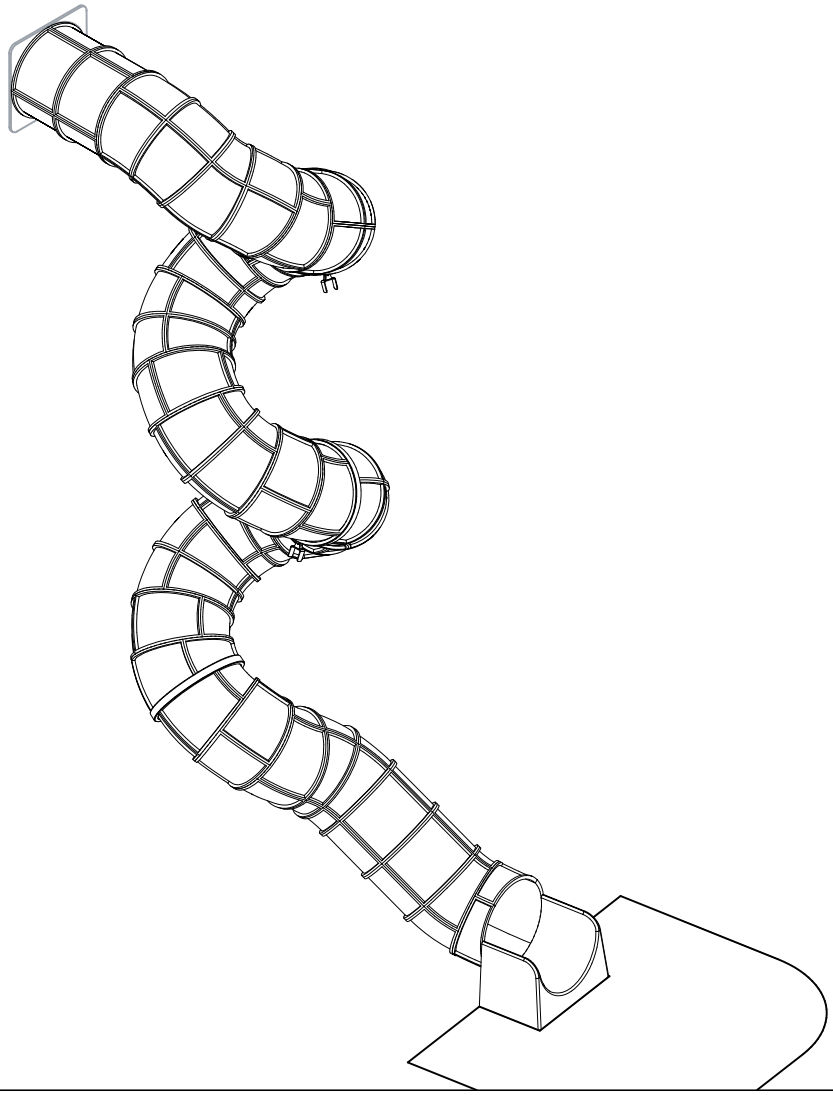

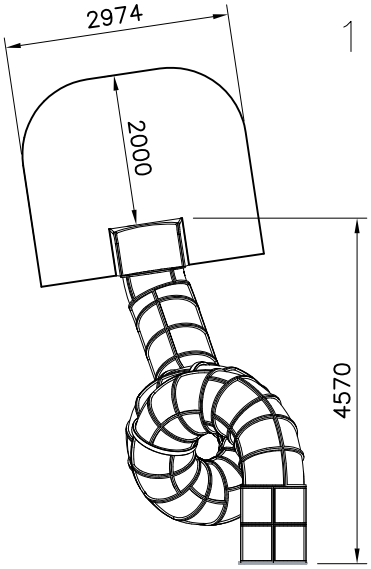

1 : 100

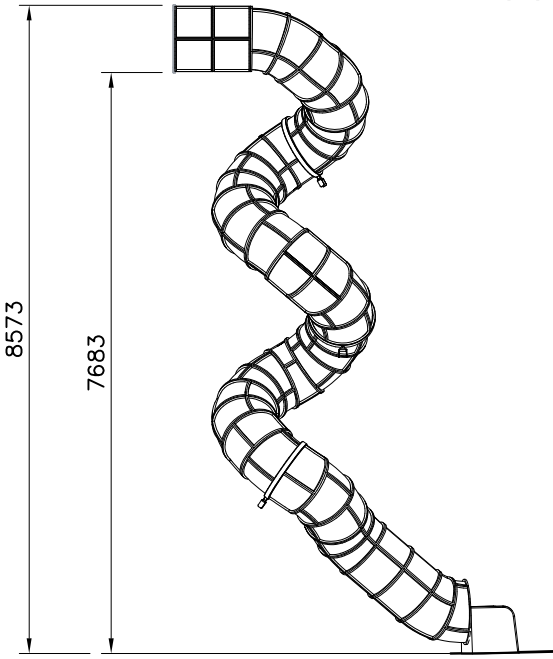

1 : 100

Copyright Lappset Group Ltd

LAPPSET®

finno

A10197

DATE: 11.9.2017

3a

004914	PCS	707918–705	PCS	900240	PCS	903533	PCS	905086	PCS	905112	PCS
	3	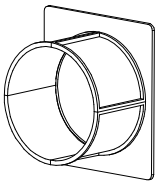	1	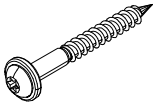	14	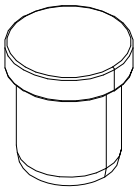	6		4	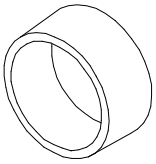	1952
				Ø8x70		SRL12		Ø44/13.5		BLACK Ø22	
905801	PCS	905811	PCS	905821	PCS	905829	PCS	905831	PCS	905850	PCS
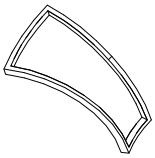	70	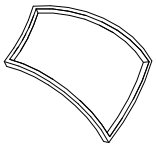	70	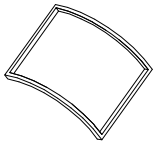	6	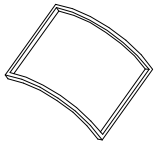	6		1880	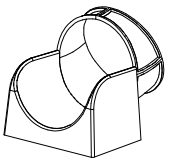	1
GREY		GREY		GREY		TRANSPARENT		BLACK			
905859	PCS	905860	PCS	909205	PCS	909248	PCS	909274	PCS	980150	PCS
	2	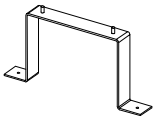	2		940		4		4	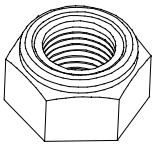	944
6x80x850				8x60		M12		8x30		M8	
980151	PCS		PCS		PCS		PCS		PCS		PCS
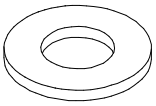	8										
Ø16/8.4											
	PCS		PCS		PCS		PCS		PCS		PCS
	PCS		PCS		PCS		PCS		PCS		PCS
	PCS		PCS		PCS		PCS		PCS		PCS

Copyright Lappset Group Ltd

LAPPSET®
finno

A10197

DATE: 11.9.2017

4a

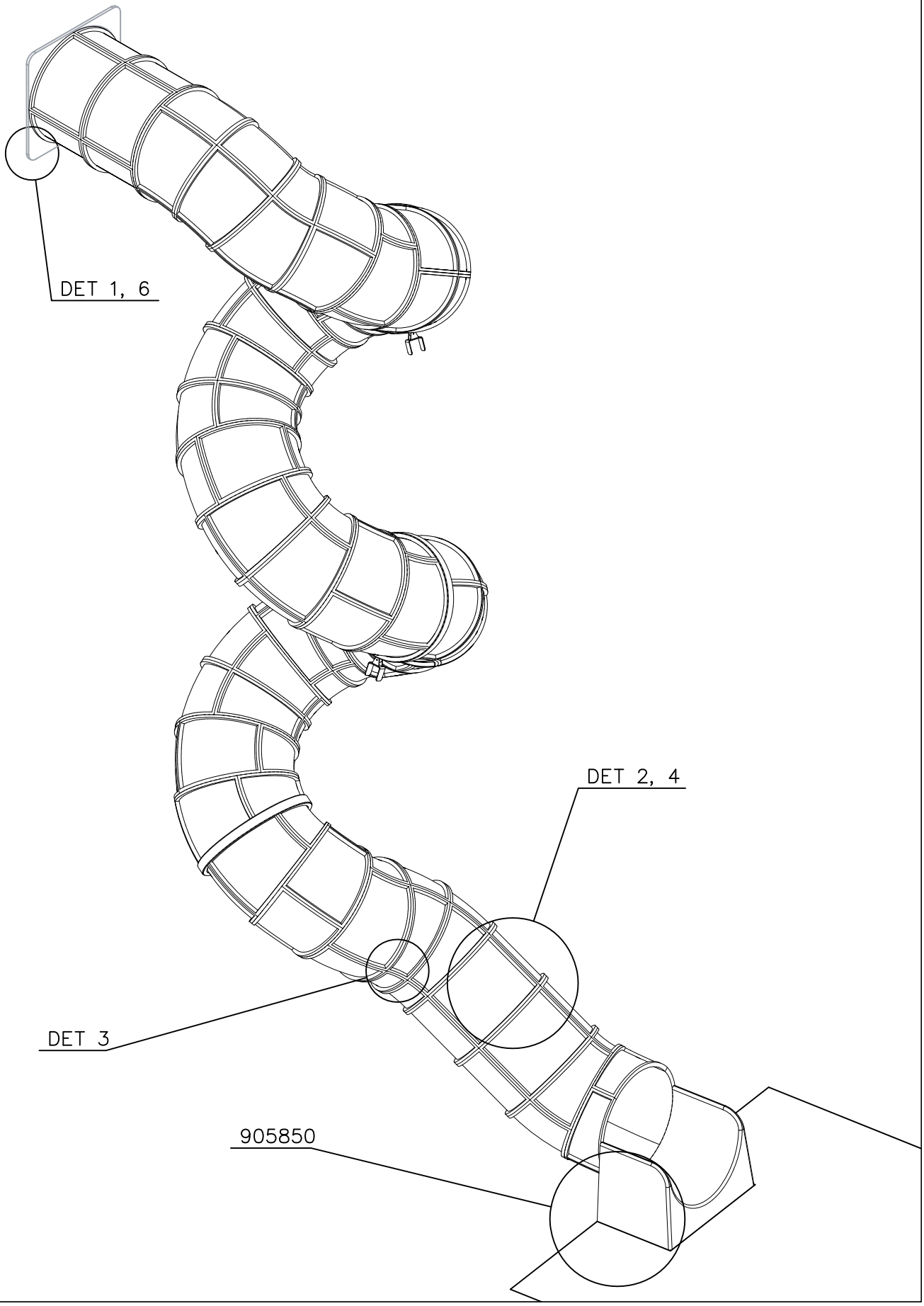

Copyright Lappset Group Ltd

LAPPSET®
finno

A10197

DATE: 21.10.2019

4a_1

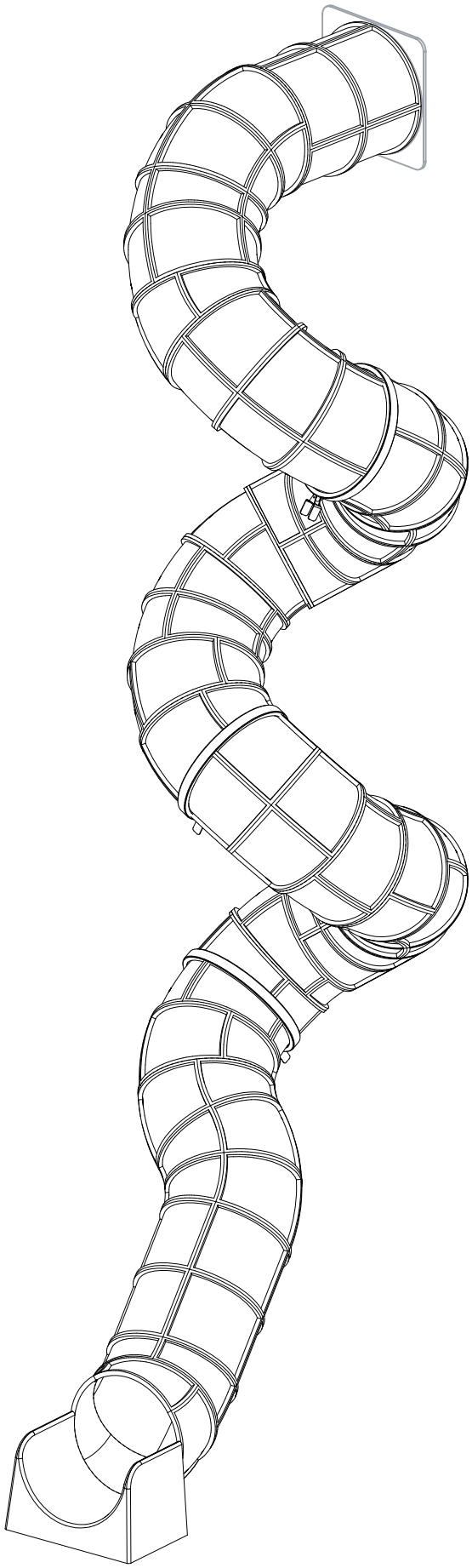

Copyright Lappset Group Ltd

LAPPSET®
finno

A10197

DATE: 21.10.2019

4a_2

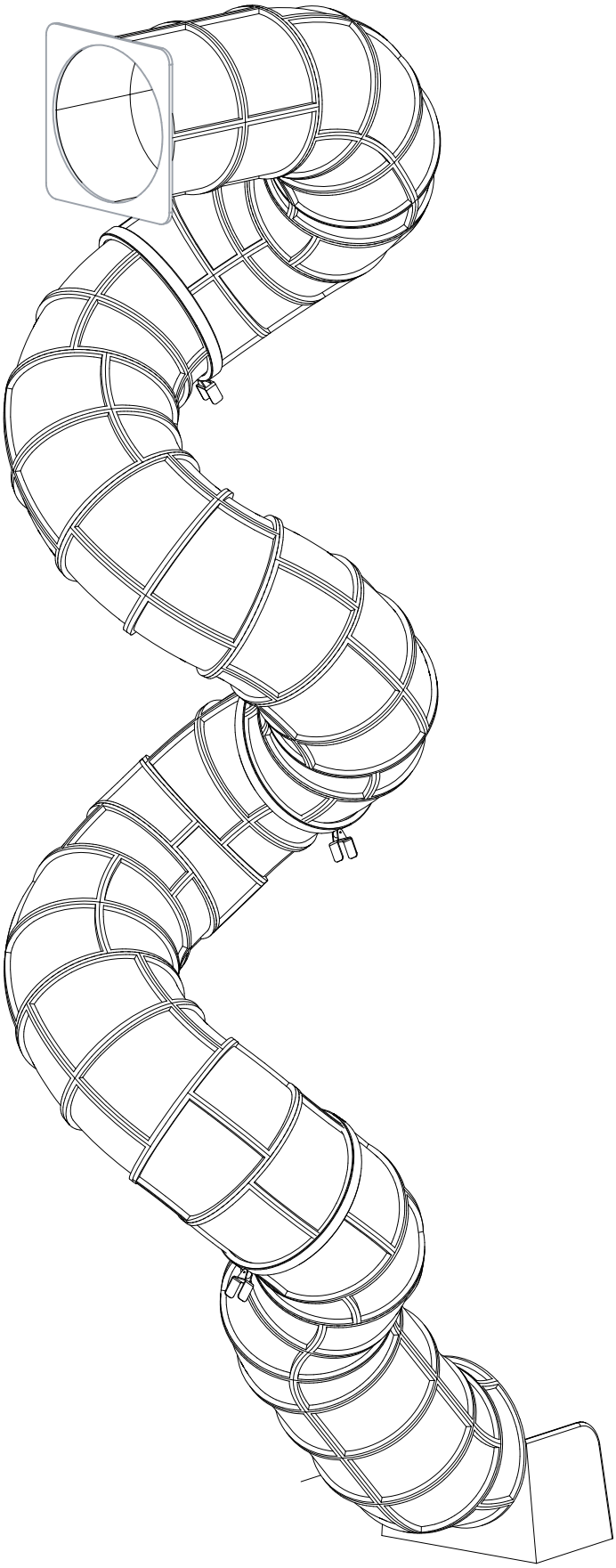

Copyright Lappset Group Ltd

LAPPSET®
finno

A10197

DATE: 21.10.2019

4a_3

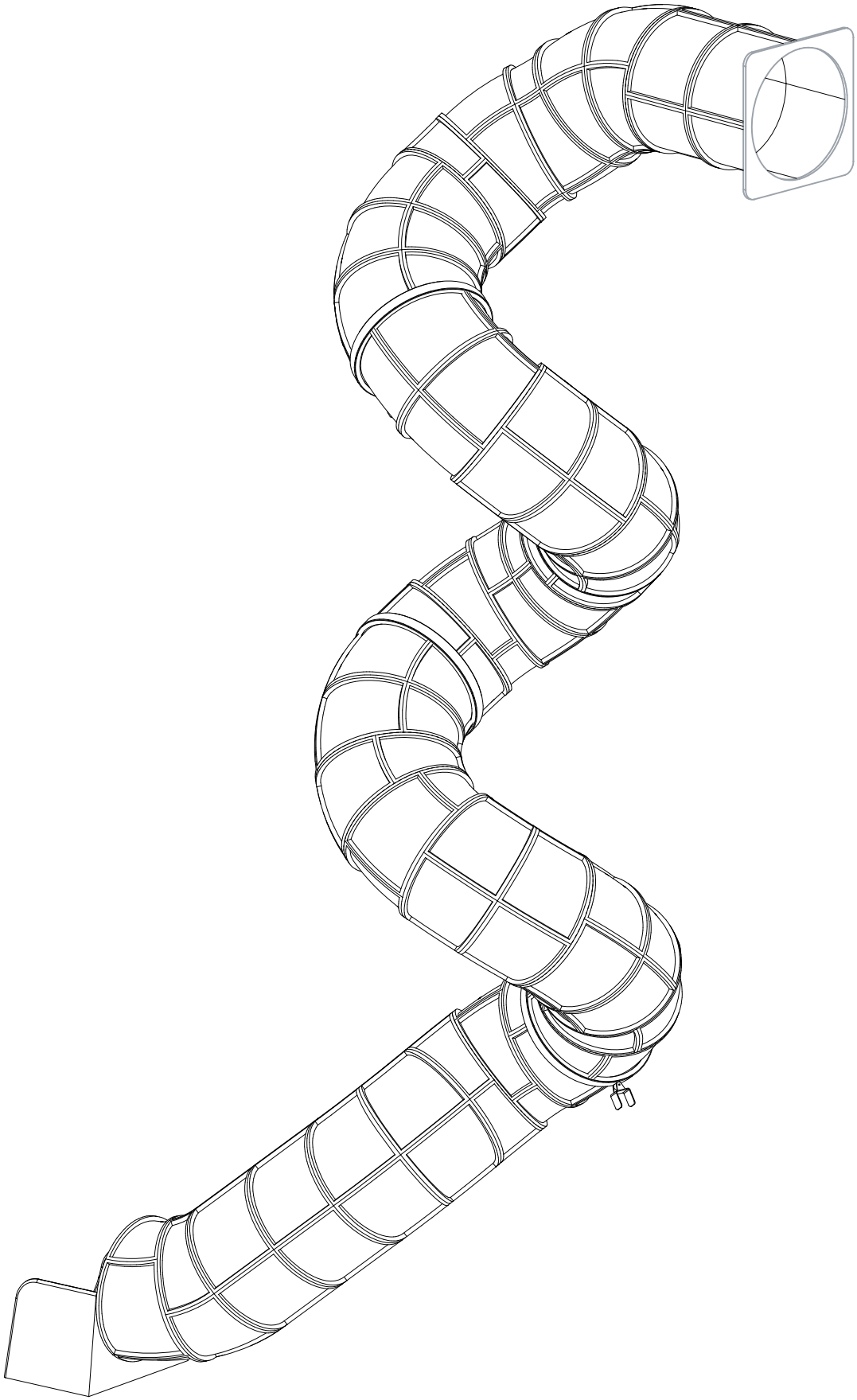

Copyright Lappset Group Ltd

LAPPSET®

finno

A10197

DATE: 11.9.2017

4b

905850

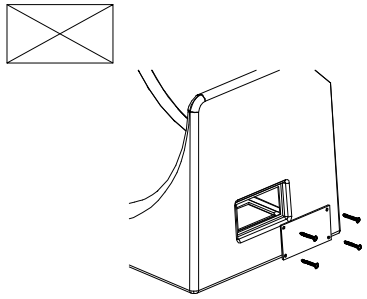

Access– and maintenance panel. Asennus– ja huolto luukku.

905850

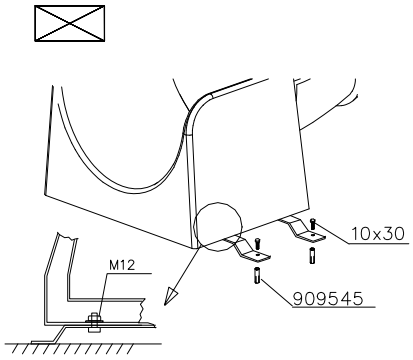

905850

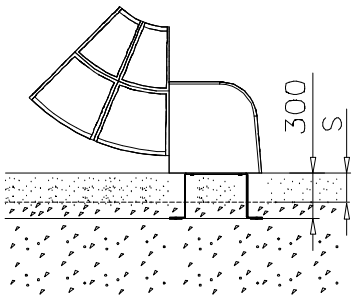

905850

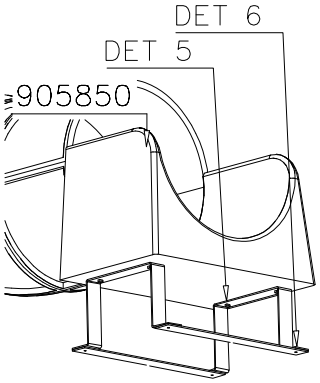

905850

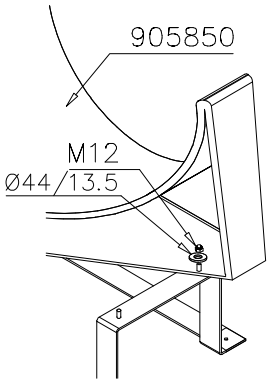

905850

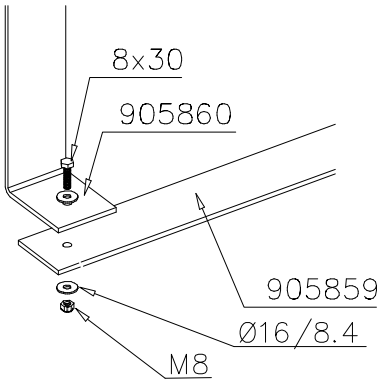

Copyright Lappset Group Ltd

LAPPSET®
finno

A10197

DATE: 11.9.2017

5a

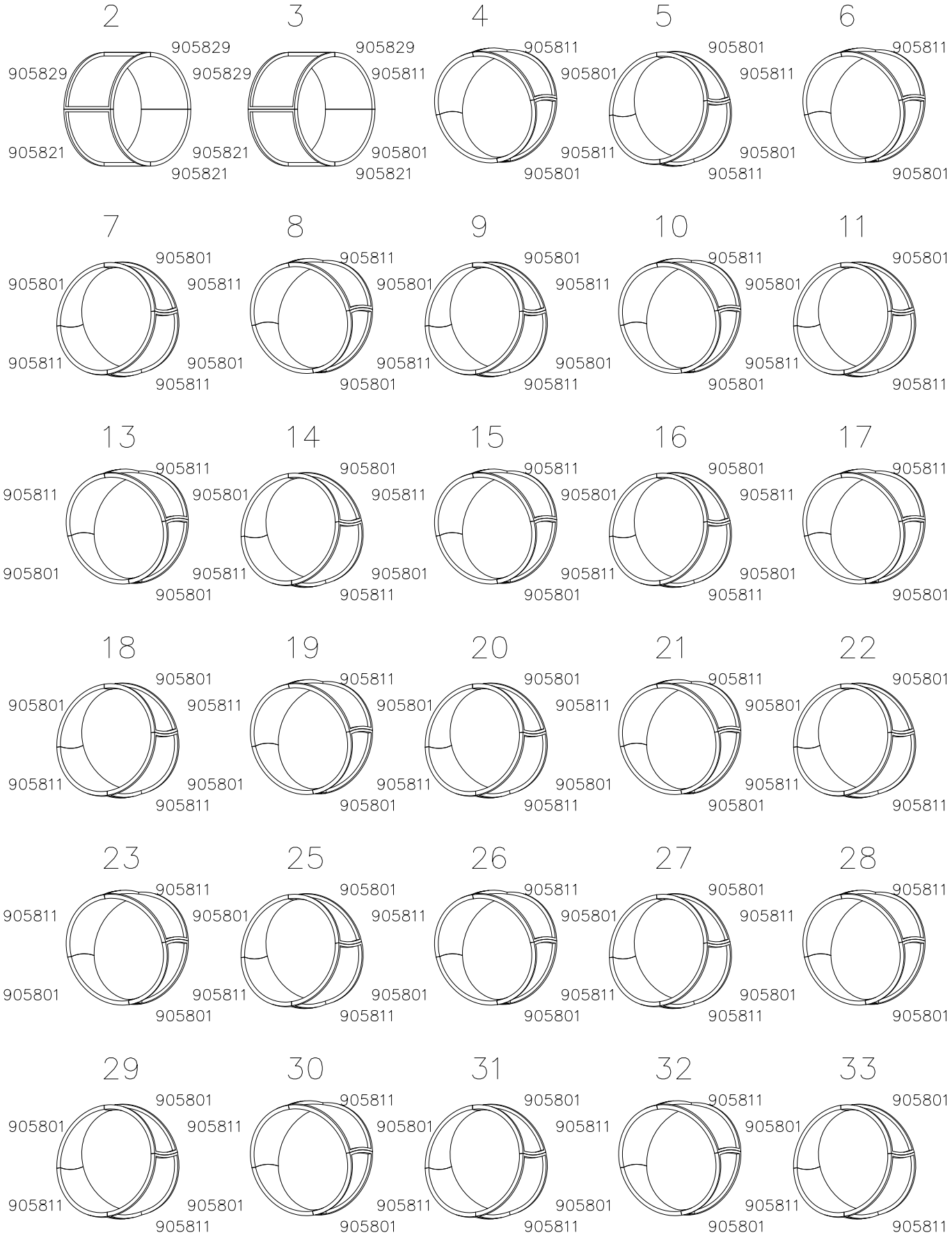

Copyright Lappset Group Ltd

LAPPSET®
finno

A10197

DATE: 11.9.2017

5b

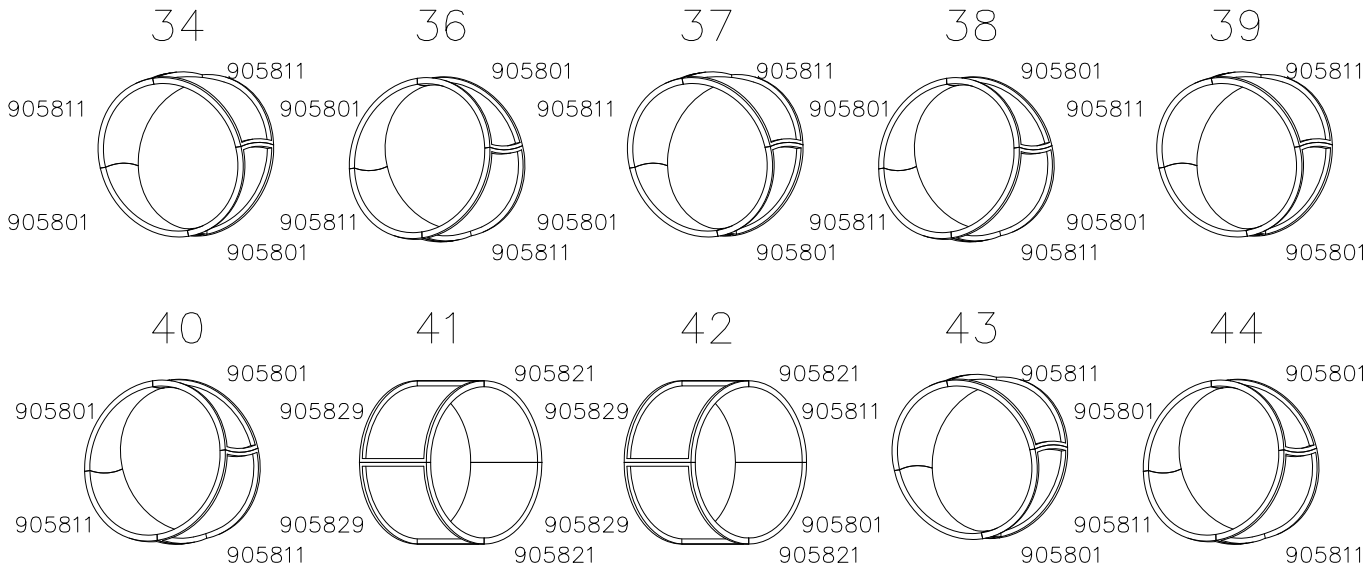

Copyright Lappset Group Ltd

LAPPSET®
finno

A10197

DATE: 11.9.2017

6a

Esimerkki putken kokoamisesta
Example of installation

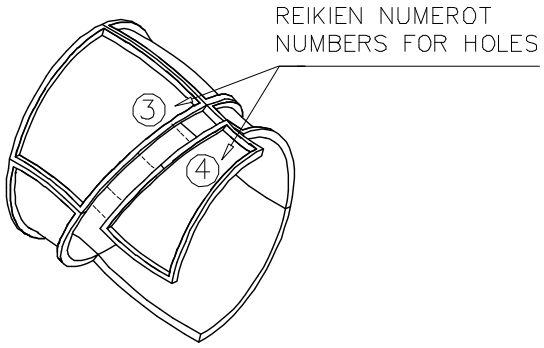

LIUKUPINTAAN EI SAA TULLA LÄPINÄKYVIÄ MODUULEJA!!

NO TRANSPARENT PIECES ON SLIDING SURFACE!!

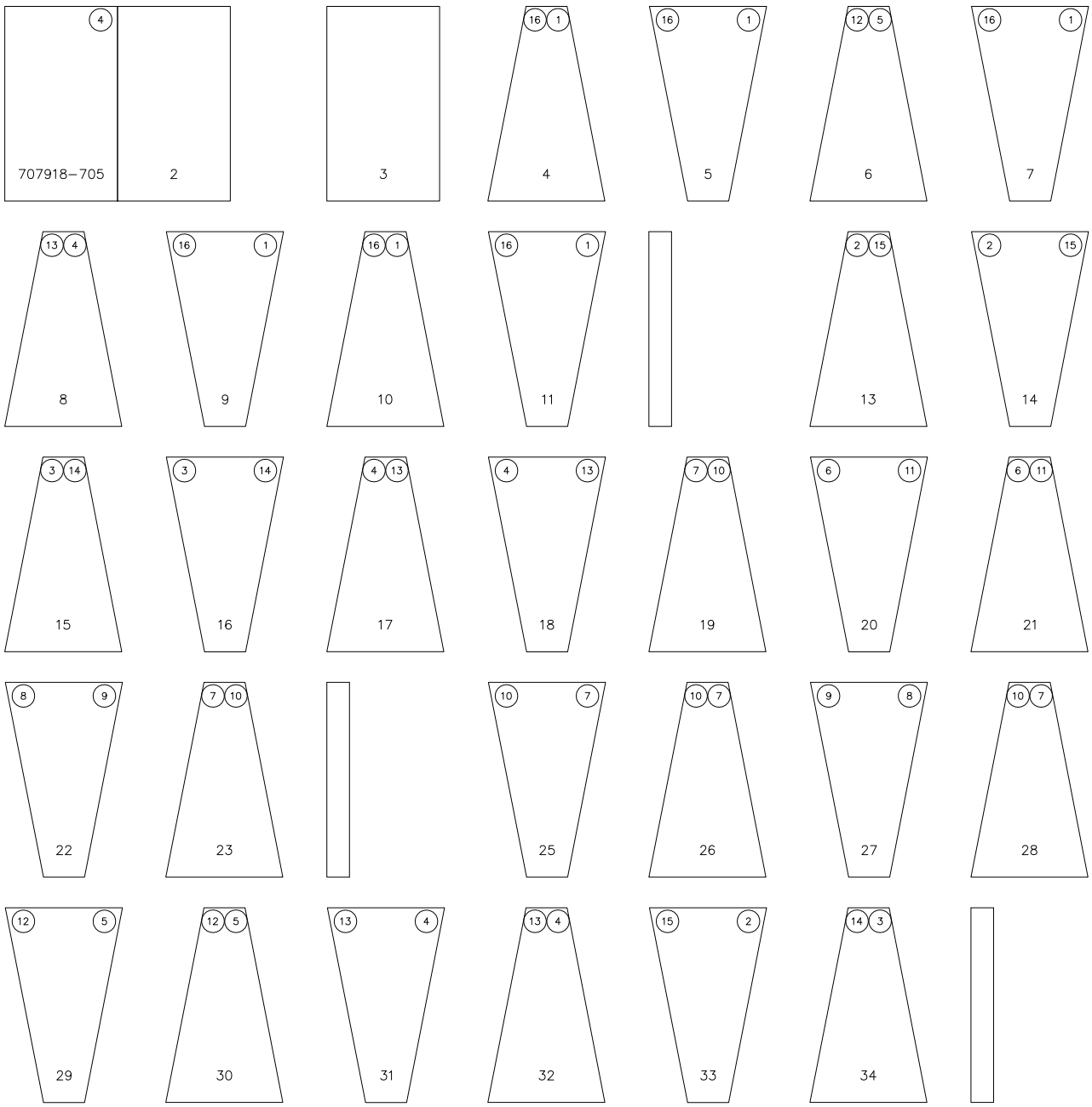

Copyright Lappset Group Ltd

LAPPSET®
finno

A10197

DATE: 11.9.2017

6b

Esimerkki putken kokoamisesta
Example of installation

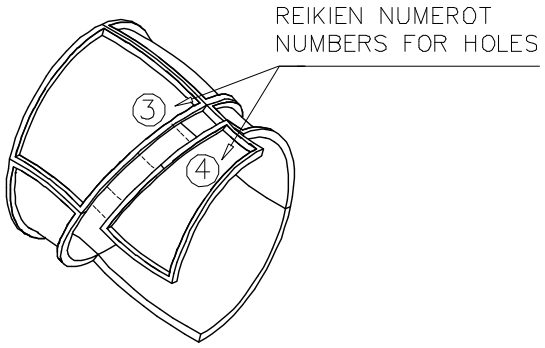

LIUKUPINTAAN EI SAA TULLA LÄPINÄKYVIÄ MODUULEJA!!

NO TRANSPARENT PIECES ON SLIDING SURFACE!!

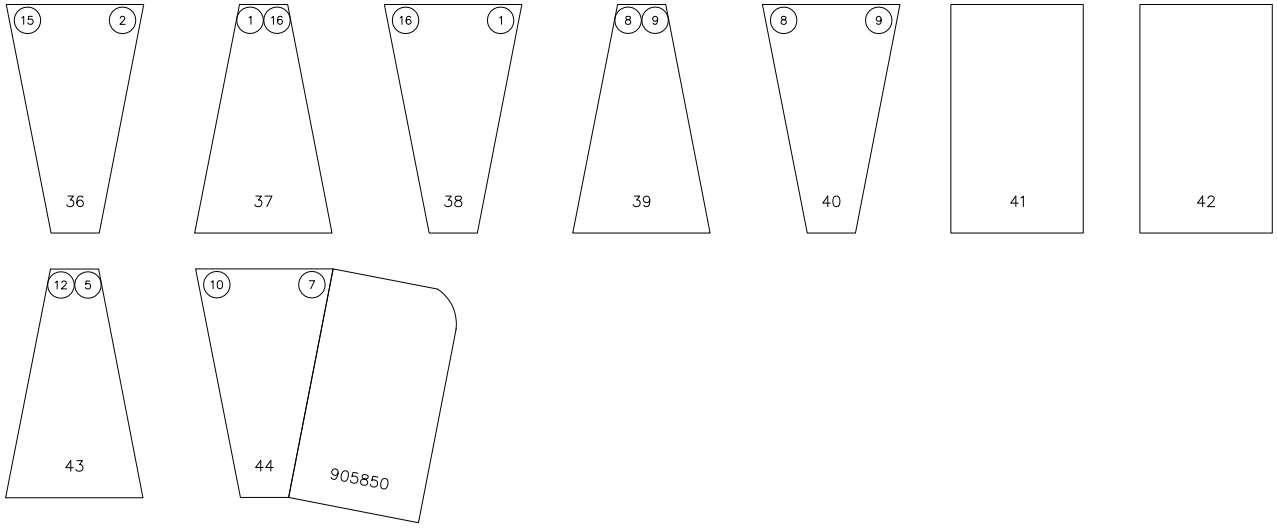

Position of the box: 127 degrees

Copyright Lappset Group Ltd

LAPPSET®
finno

A10197

DATE: 11.9.2017

7a

Valmiiksi kasattujen osien osakokoonpanot ja vara-osa listat.

Ready installed component subassemblies and spare part list.

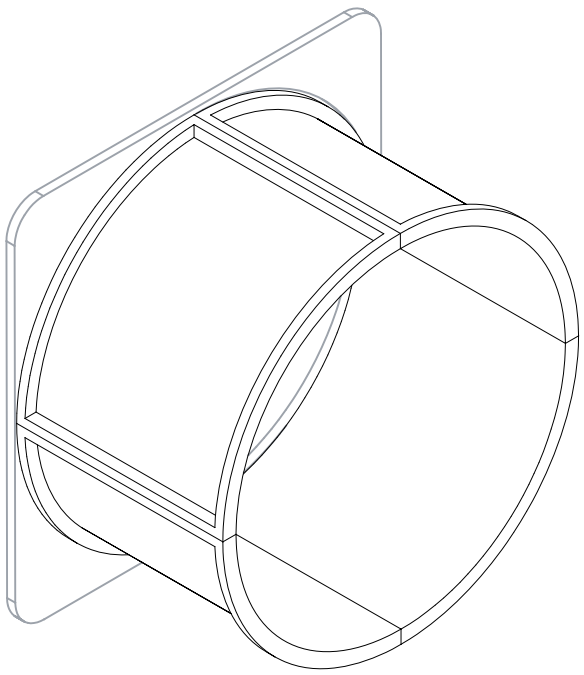

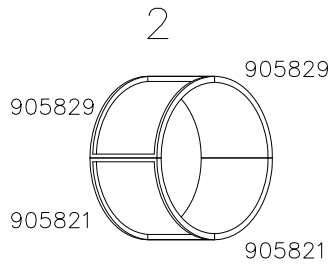

707918–705	909205 x 12	980150 x 12
905831 x 40	909208 x 16	909119 x 16

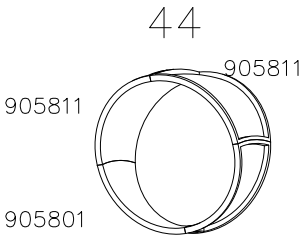

		909252 x 13
		700413 x 1
909205 x 16 909206 x 8	980150 x 16	905831 x 32
905850	909208 x 8	980151 x 8

Position of the box: 127 degrees

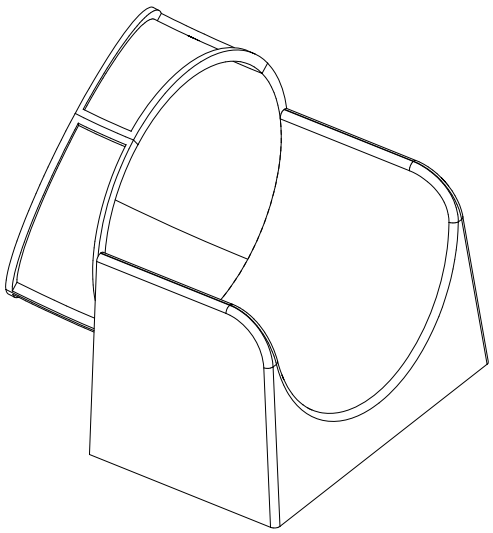

Copyright Lappset Group Ltd

LAPPSET®
FINNO

TUBE INSTALLATION GENERAL

PLATE AND RINGS

DATE: 1.6.2016

DET 1

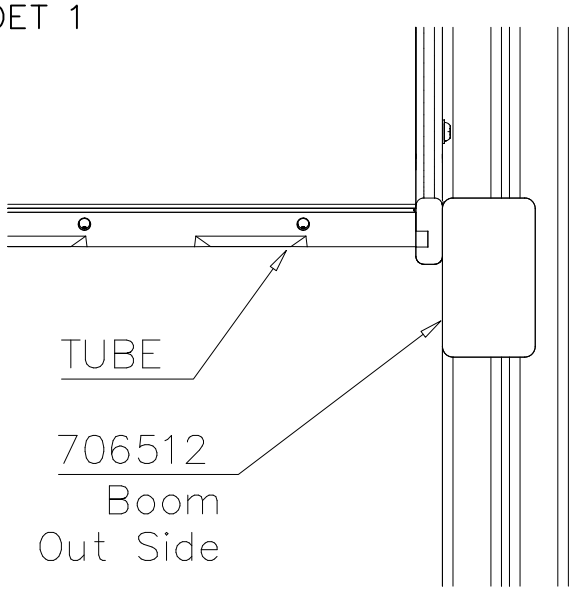

DET 2

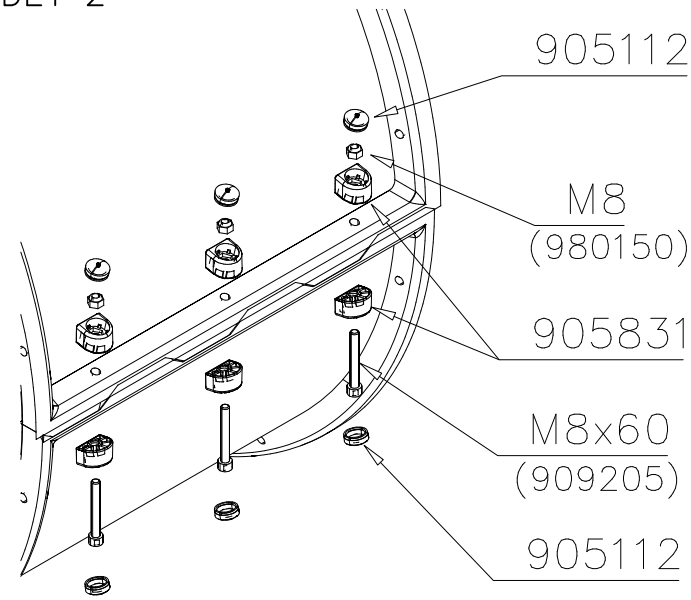

DET 3

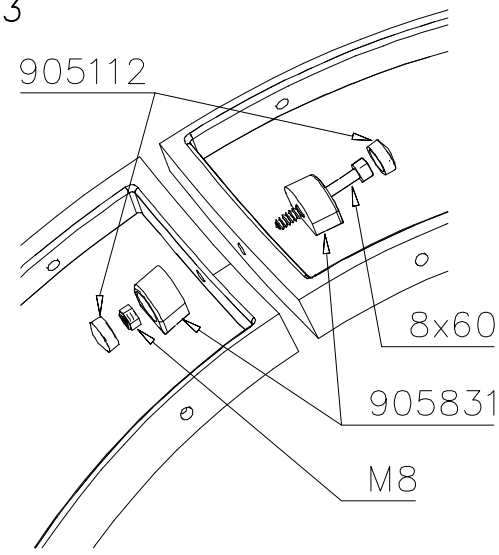

DET 4

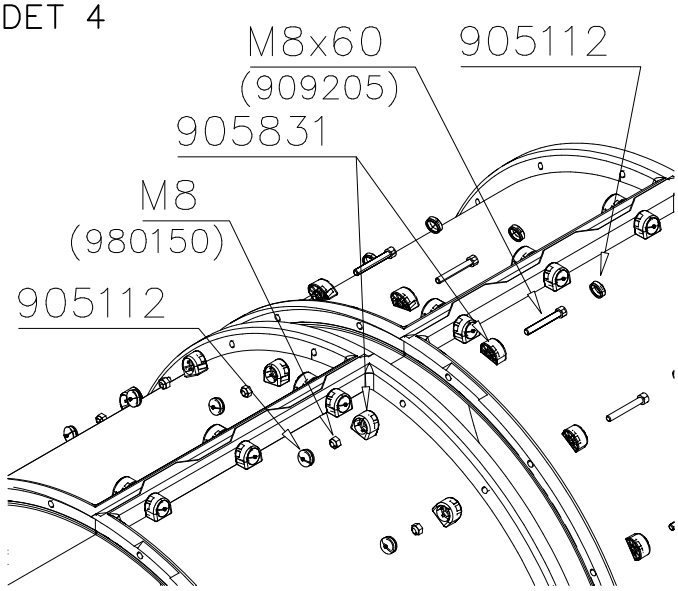

DET 5

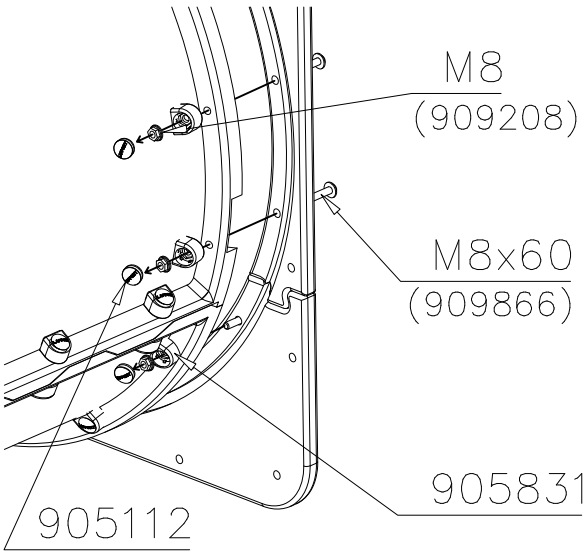

DET 6

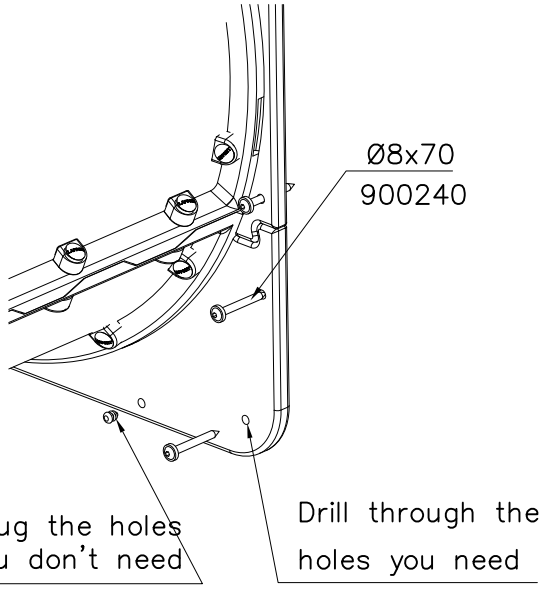

Copyright 1998 Lappset Group Ltd

LAPPSET®

A10259

FLORA

DATE: 17.1.2018

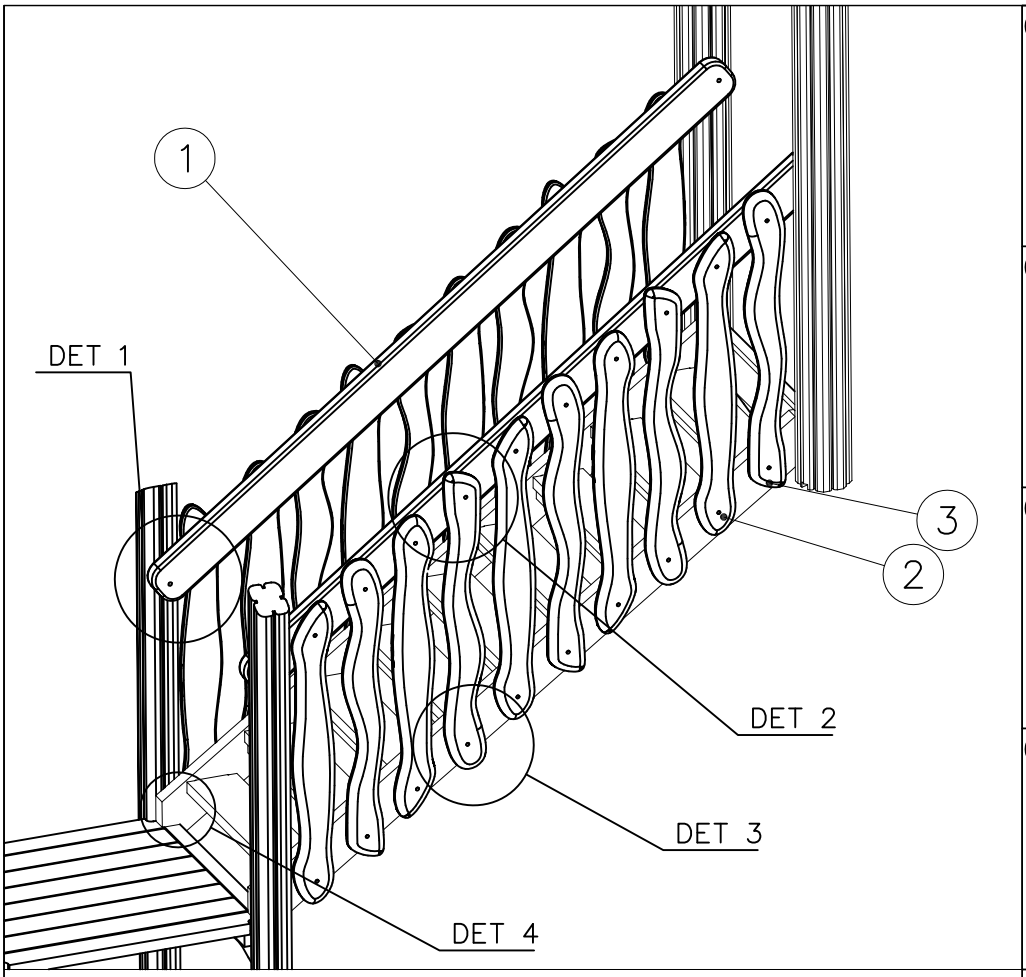

1 P12432 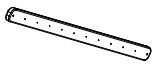 45x120x2080	PCS 2	
2 705208 32x120x880	PCS 10	
3 705209 32x118x875	PCS 10	
4 900240 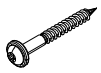 Ø8x70	PCS 40	
5 903093 Ø8x90	PCS 6	
6 980152 Ø24/8.4x2	PCS 2	
7 980128 Ø7x40	PCS 3	
	PCS	PCS
	PCS	PCS
	PCS	PCS
	PCS	PCS

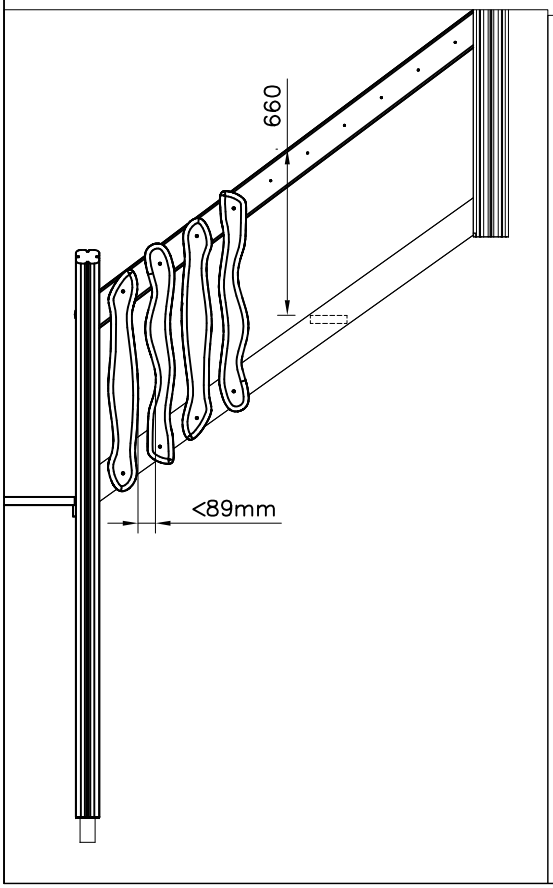

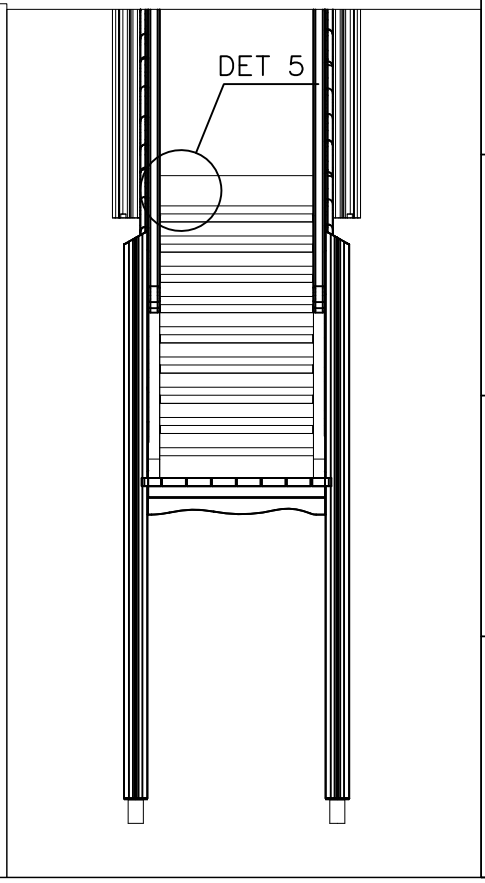

Copyright Lappset Group Ltd

LAPPSET®

A10259

FLORA

DATE: 17.1.2018

DET 1

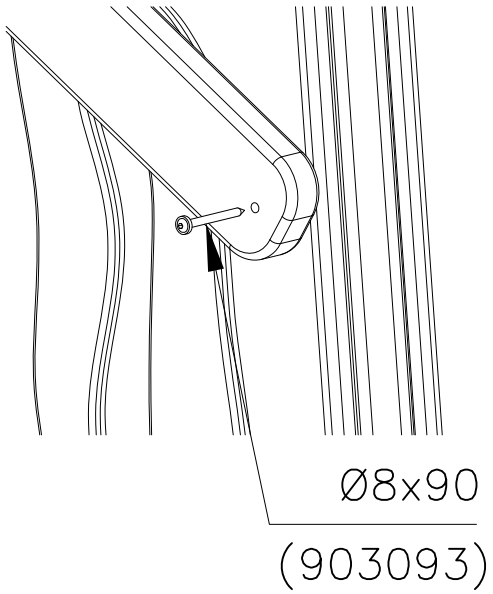

DET 2

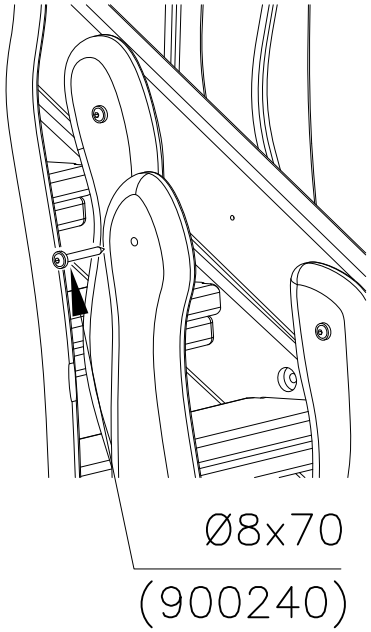

DET 3

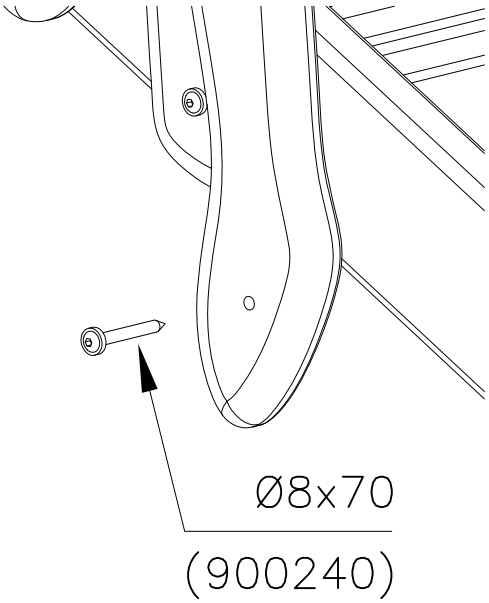

DET 4

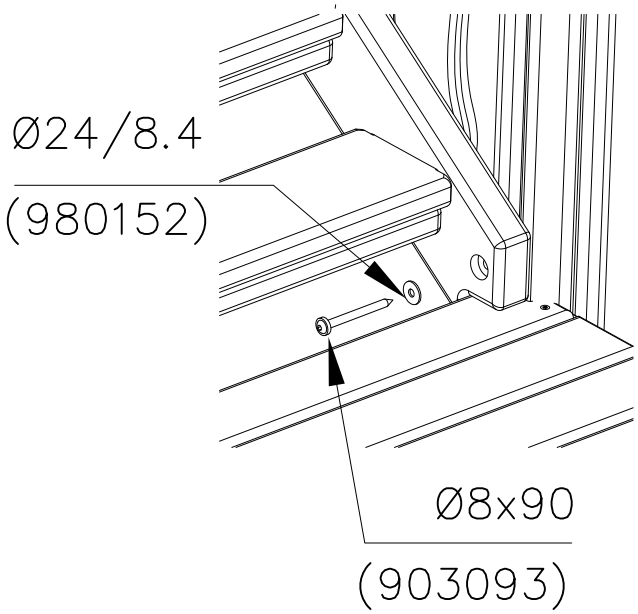

DET 5

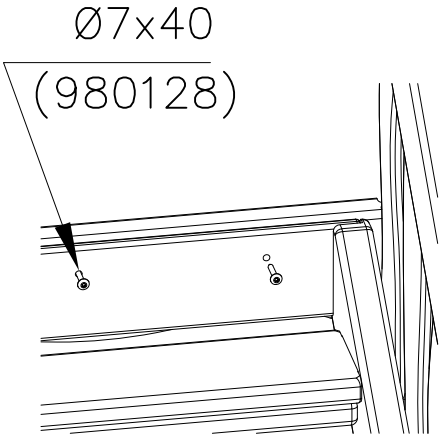

Copyright 1998 Lappset Group Ltd

LAPPSET®

FINNO

705230

DATE: 6.6.2014

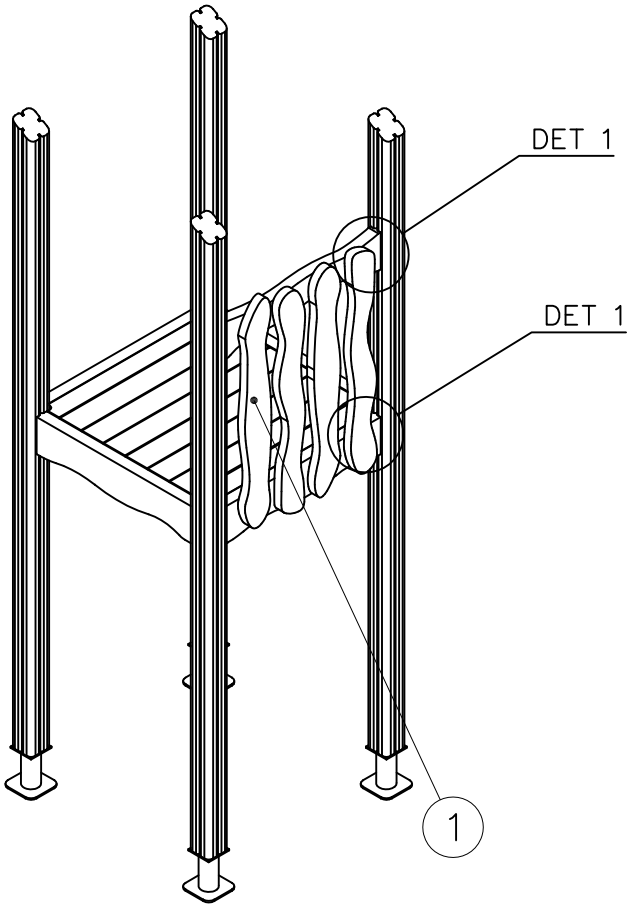

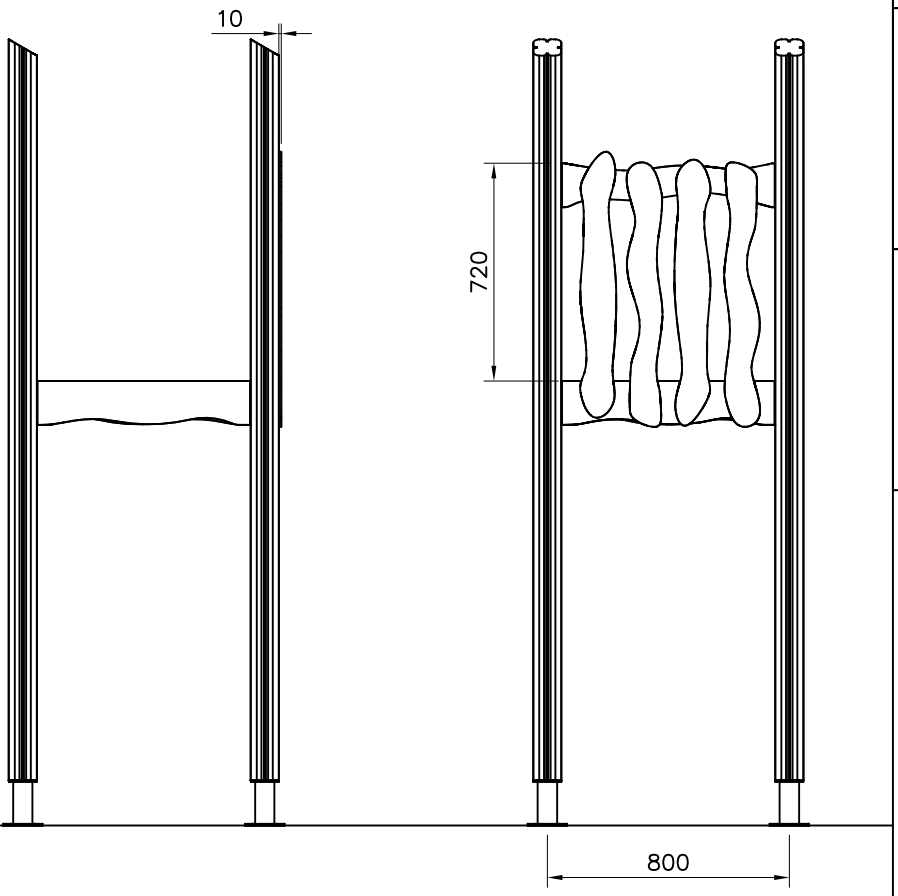

	PCS		PCS
1 705210 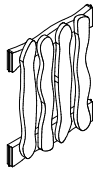	1	2 903093 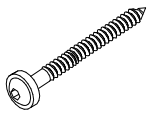 Ø8x90	8
	PCS		PCS
	PCS		PCS
	PCS		PCS
	PCS		PCS
	PCS		PCS

DET 1

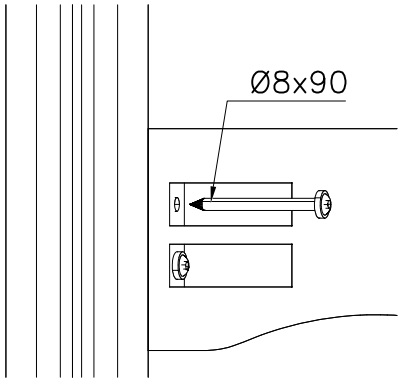

Copyright Lappset Group Ltd