LAPPSET®

FINNO

ASENNUSOHJE
MONTERINGSANSVISNING
INSTALLATION INSTRUCTION
AUFBAUANLEITUNG
NOTICE D'INSTALLATION

REF: 121100
DATE: 1.4.2005

121100

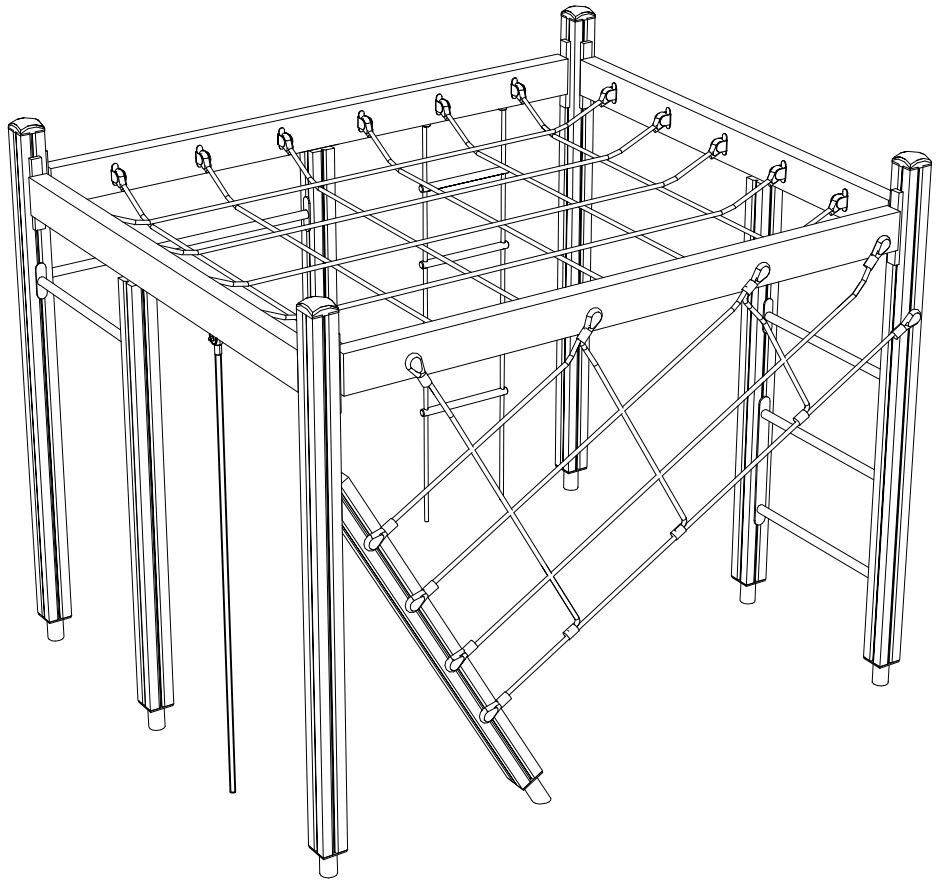

Copyright Lappset Group Ltd

LAPPSET®

FINNO

121100

REF: 121100
DATE: 1.4.2005

006800	PCS	006816	PCS	006819	PCS	006931	PCS	006932	PCS	006941	PCS
	1		3		4		2		2		1
L 1530		L 1650		L 1950		L 1860		L 2260			
006942	PCS	006961	PCS	006964	PCS	900240	PCS	905051	PCS	905083	PCS
	1		1		1		28		2		44
				L 2380		8x70		Ø24/8.5		Ø32	
905102	PCS	905103	PCS	905104	PCS	905112	PCS	905120	PCS	905138	PCS
	16		16		32		55		14		4
SR-H-2040		PT-28/32-H		M10		Ø22		Ø14		GREY	
905196	PCS	907119	PCS	909125	PCS	909126	PCS	909217	PCS	909231	PCS
	4		1		5		39		6		1
GREY		L 704		8x100		8x90		8x70		8x130	
909233	PCS	909519	PCS	909521	PCS	909542	PCS	909543	PCS	909574	PCS
	1		1		8		1		2		3
8x100						L 1104		L 704		6x40x200	
909578	PCS	909638	PCS	909862	PCS	980100	PCS	980131	PCS	980150	PCS
	8		16		16		12		16		44
		Ø20/10.5		10x60		5x60		6x60		M8	
980151	PCS		PCS		PCS		PCS		PCS		PCS
	50										
Ø16/8.4											

Copyright Lappset Group Ltd

LAPPSET®
FINNO

121100

REF: 121100
DATE: 1.4.2005

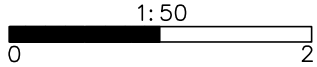

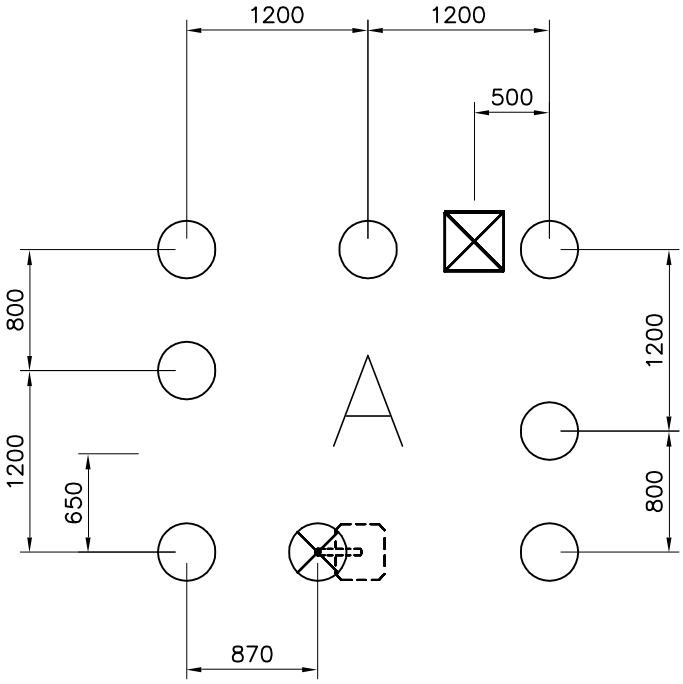

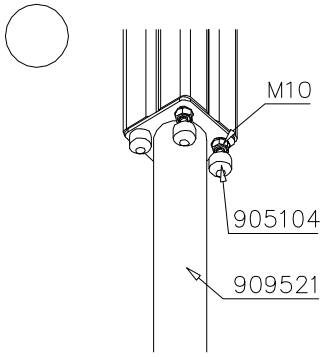

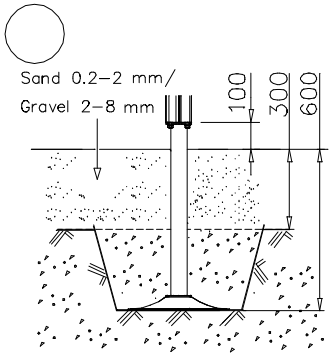

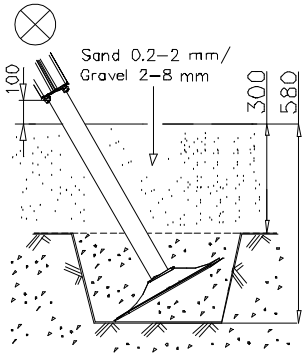

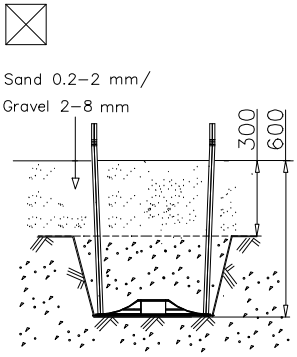

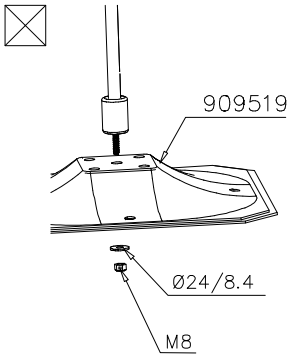

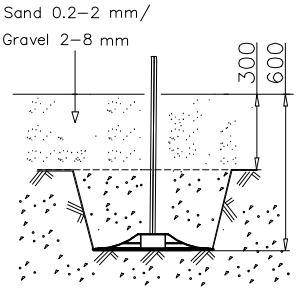

Copyright Lappset Group Ltd

LAPPSET®
FINNO

121100

REF: 121100
DATE: 1.4.2005

EN Impact Area 30.4 m2

1:100
0 5m

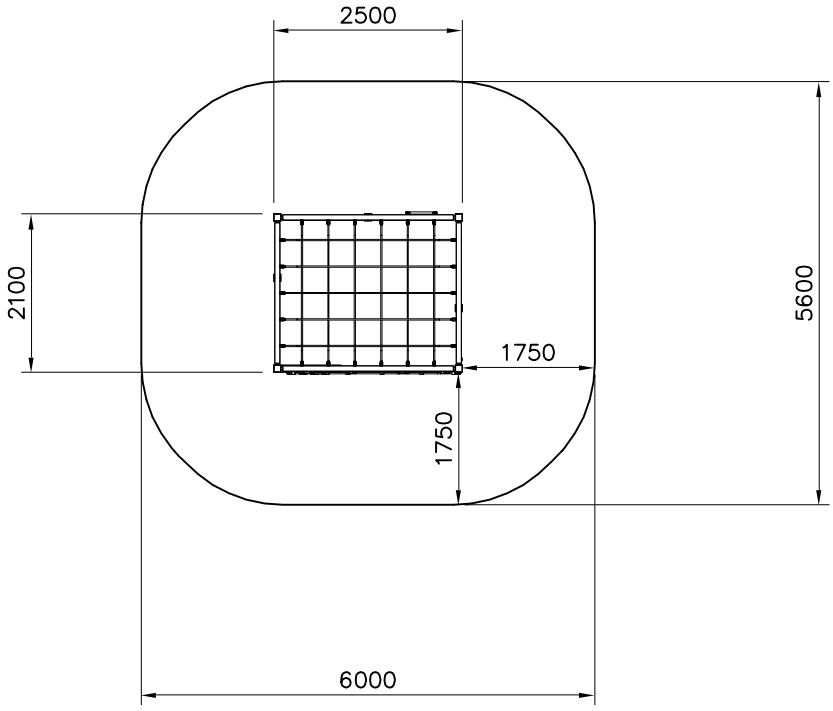

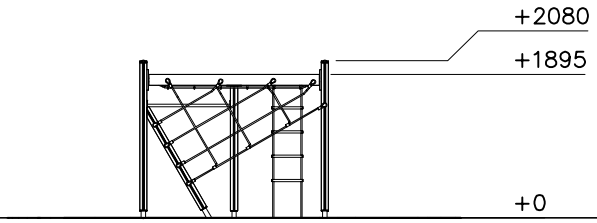

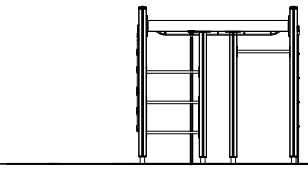

Copyright Lappset Group Ltd

LAPPSET®

FINNO

121100

REF: 121100
DATE: 1.4.2005

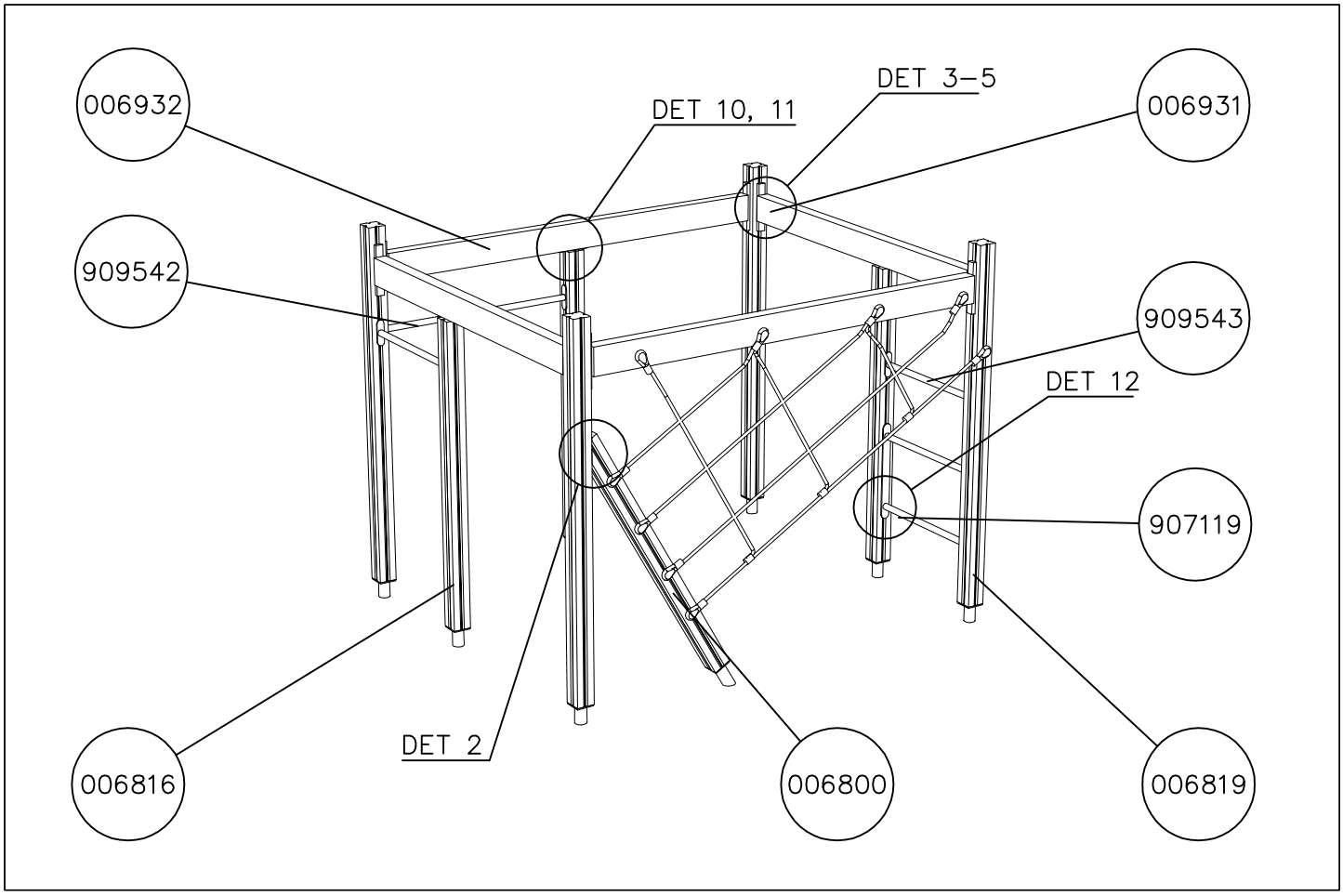

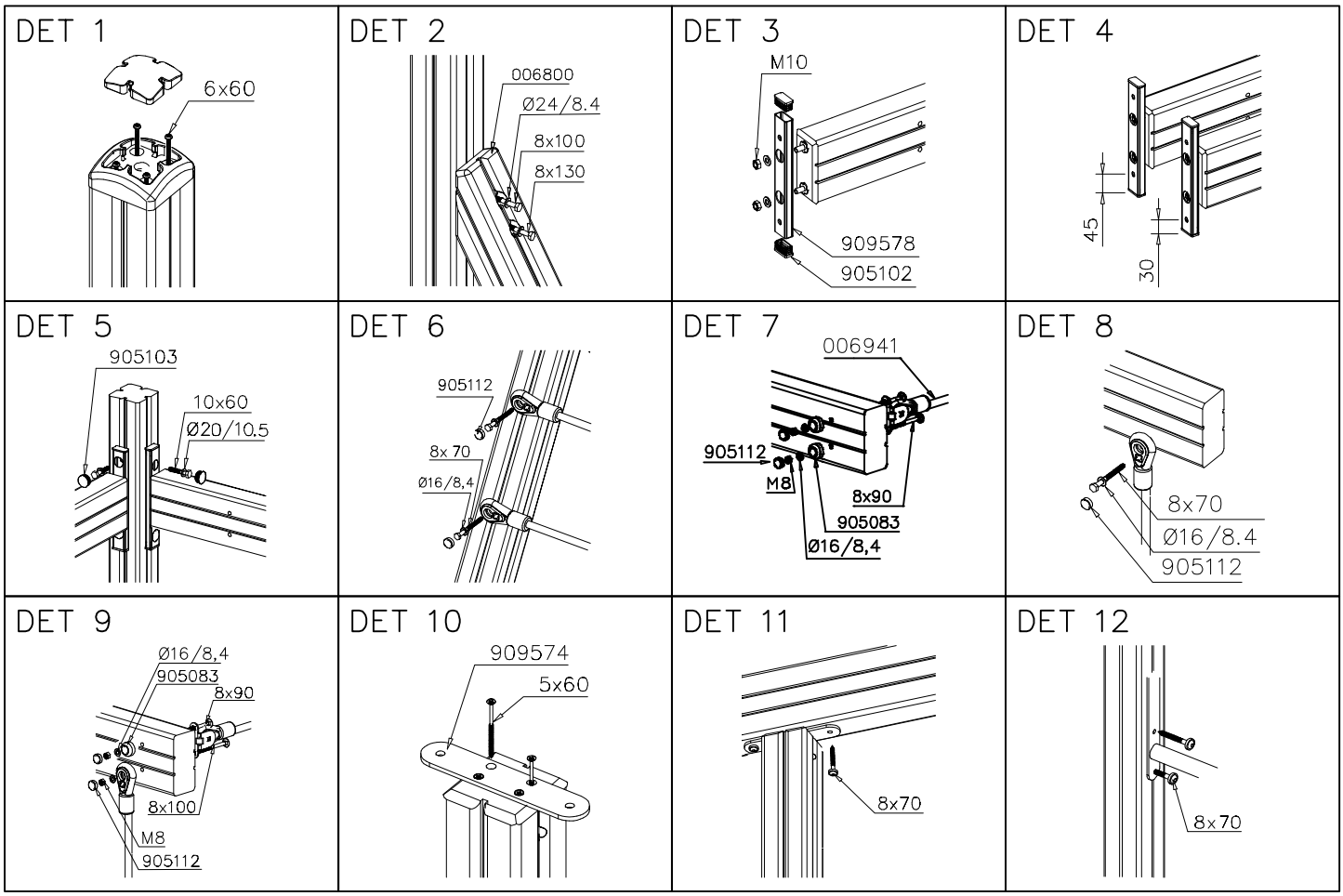

Copyright Lappset Group Ltd

LAPPSET®
FINNO

121100

REF: 121100
DATE: 1.4.2005

DET 13

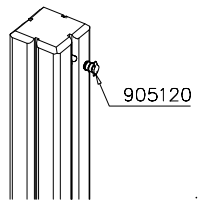

DET 14

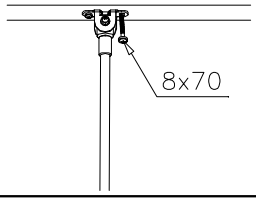

Copyright Lappset Group Ltd

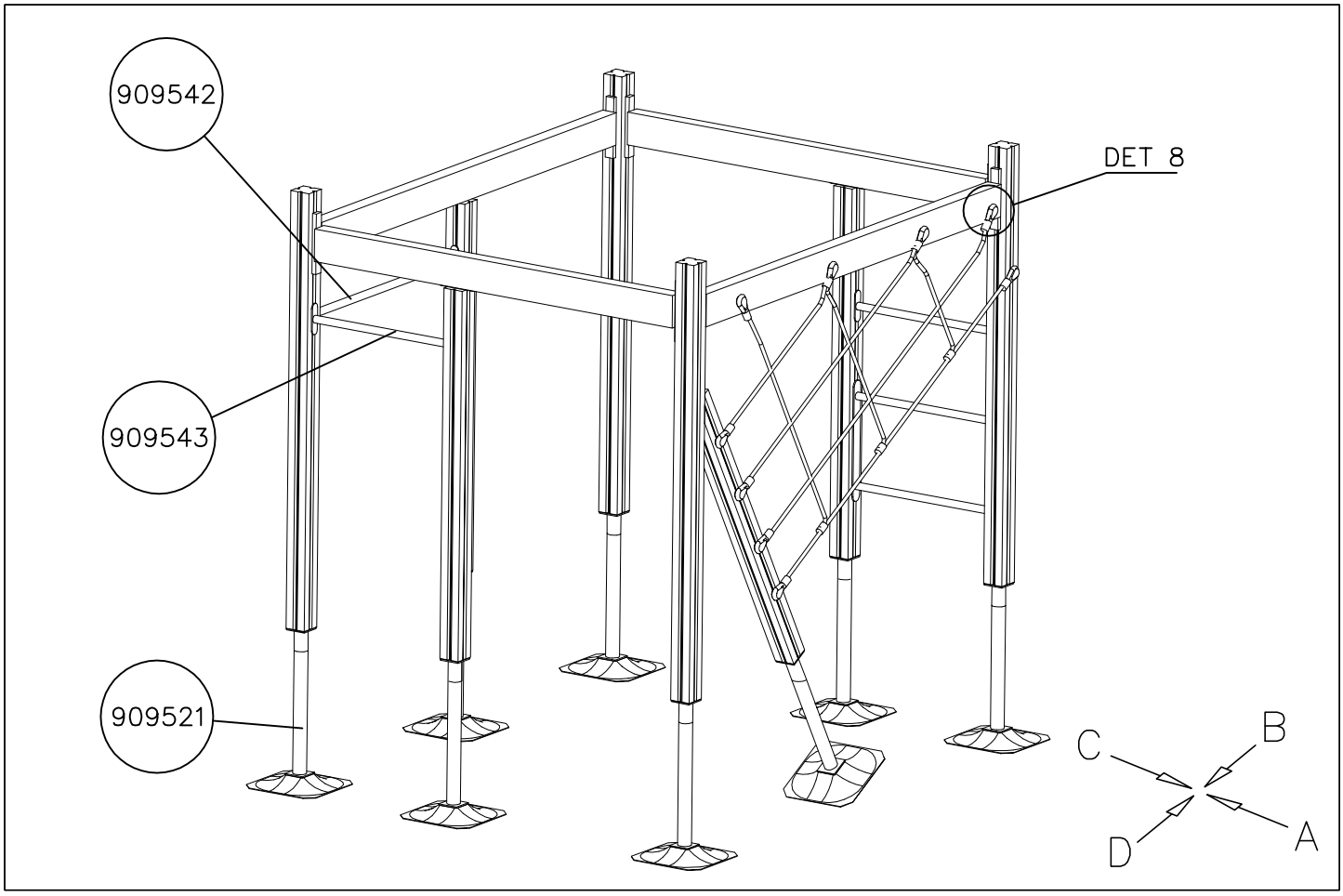

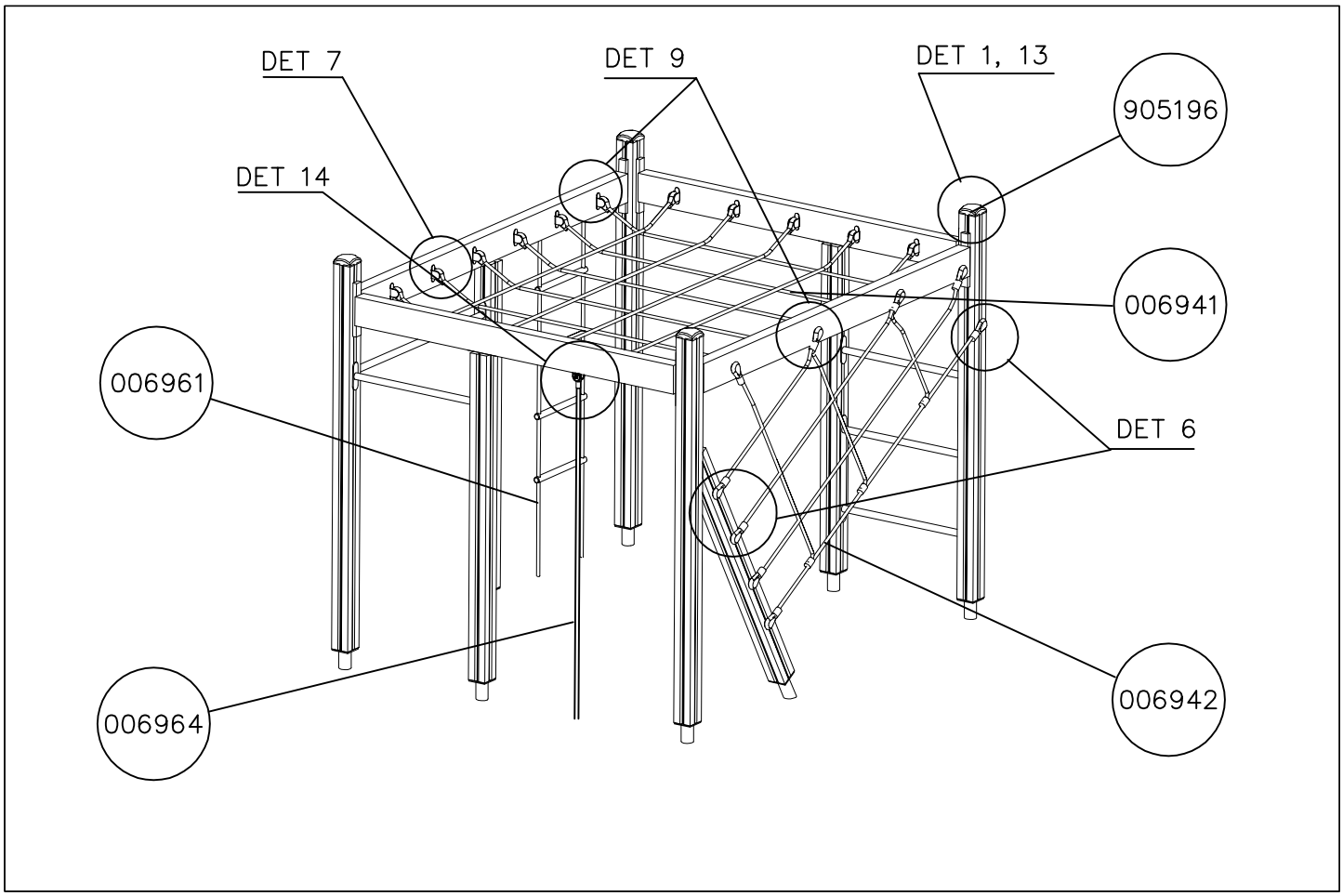

Copyright Lappset Group Ltd

LAPPSET®
FINNO

121100

REF: 121100
DATE: 1.4.2005

SECTION A
7a

A

1:50

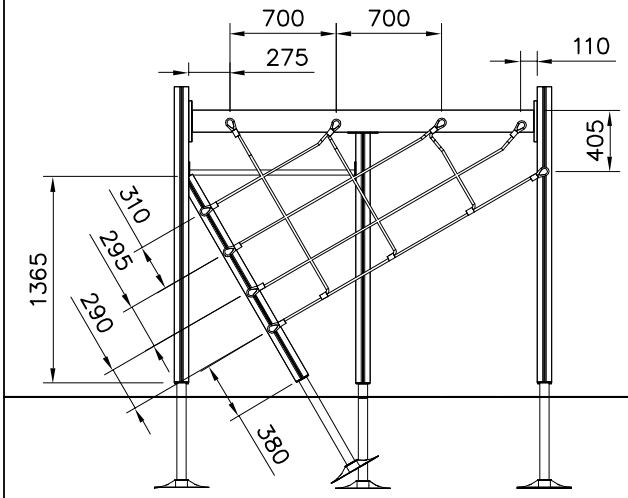

B

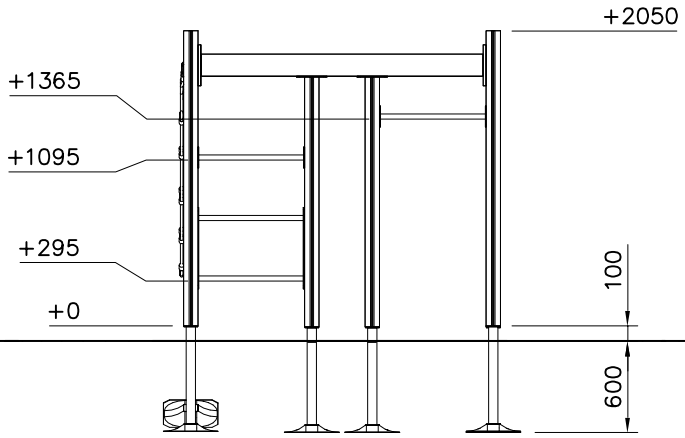

C

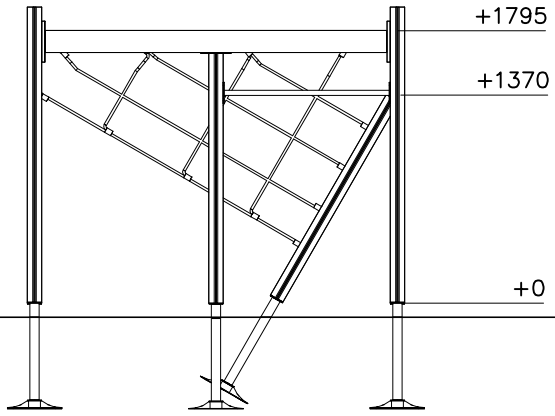

D

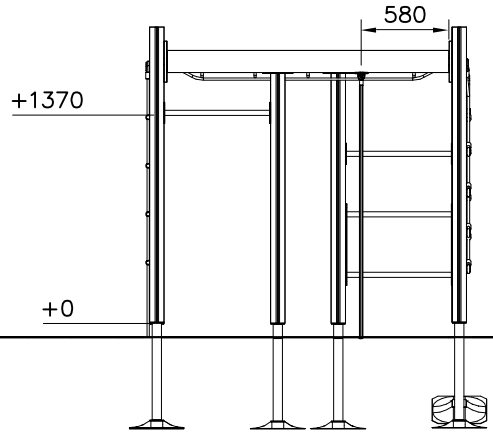

Copyright Lappset Group Ltd