LAPPSET®

CLOXX

ASENNUSOHJE
MONTERINGSANSVISNING
INSTALLATION INSTRUCTION
AUFBAUANLEITUNG
NOTICE D'INSTALLATION

DATE: 21.2.2019

220300

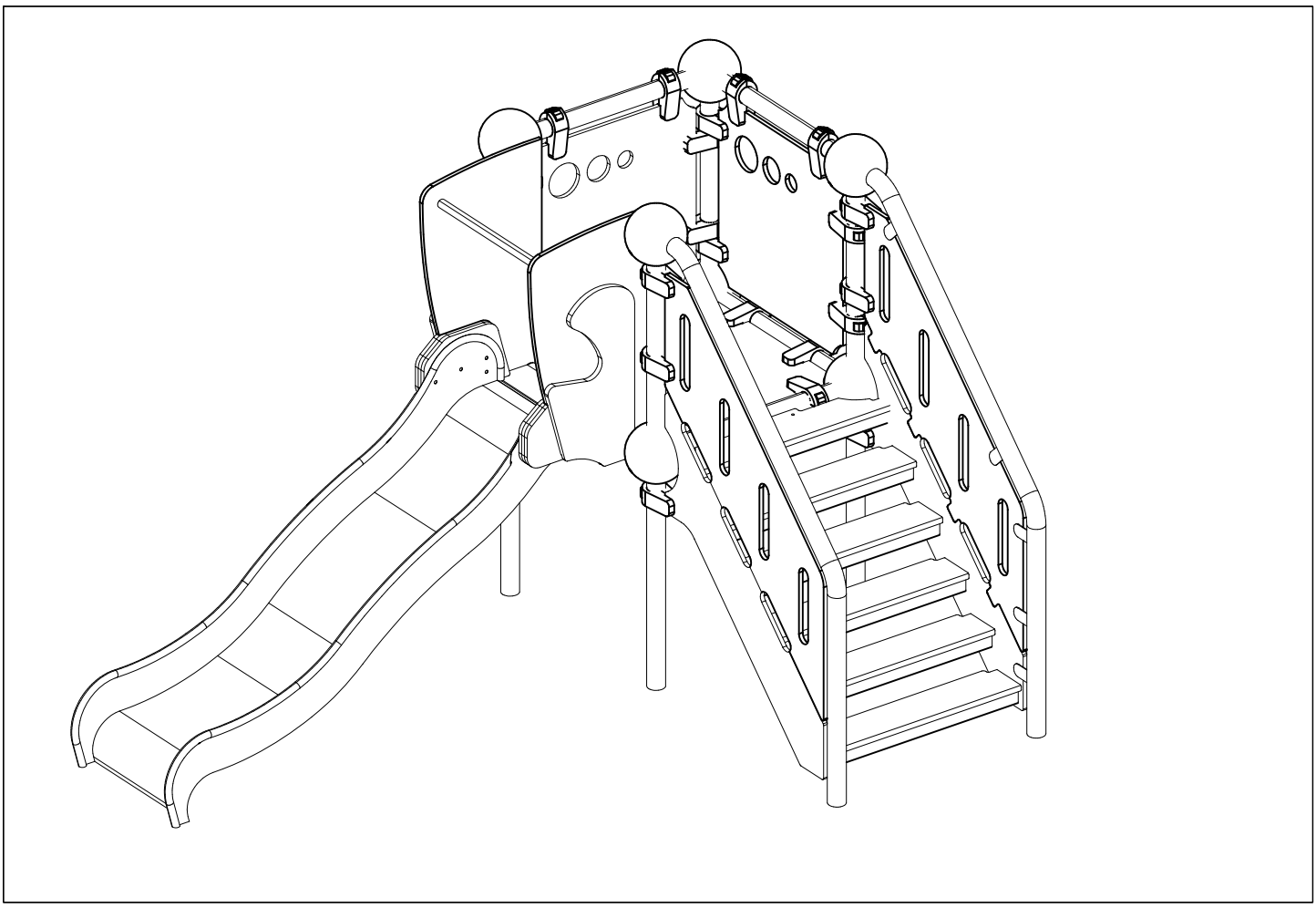

Copyright Lappset Group Ltd

LAPPSET®

CLOXX

220300

3

DATE: 21.2.2019

702341	PCS	704179	PCS	704328	PCS	704381	PCS	704432	PCS	707133	PCS
	1	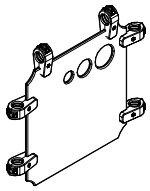	1	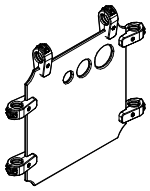	1	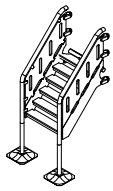	1	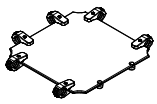	1	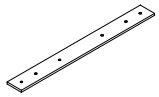	1
90x50										10x80x745	
708858	PCS	709045	PCS	901868	PCS	902022	PCS	902134	PCS	902157	PCS
	1	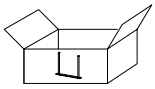	1	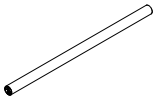	2	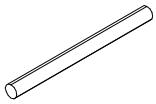	4	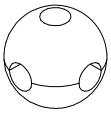	8		22
				Ø34x598		L 710				60x60x2	
904505	PCS	909519	PCS	909637	PCS	909638	PCS	909639	PCS	909708	PCS
	4	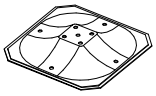	4	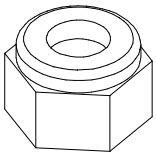	16	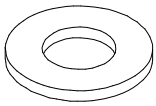	32	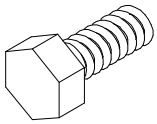	16	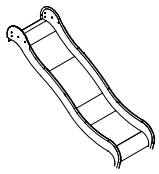	1
L 2137		380x380		M10		Ø20/10.5		M10x25		+870	
	PCS		PCS		PCS		PCS		PCS		PCS
	PCS		PCS		PCS		PCS		PCS		PCS
	PCS		PCS		PCS		PCS		PCS		PCS
	PCS		PCS		PCS		PCS		PCS		PCS

Copyright Lappset Group Ltd

LAPPSET®

CLOXX

220300

DATE: 21.2.2019

4

EN/AS Impact Area 20 m2

Grid size = 500 mm

1:50

0 2

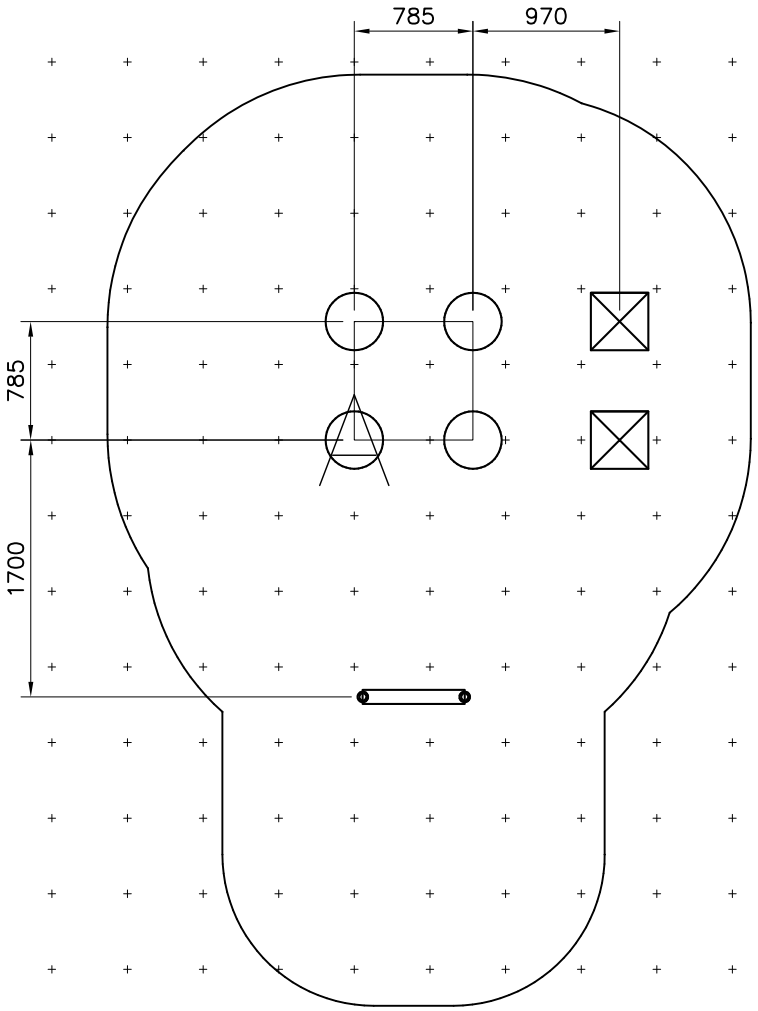

Copyright Lappset Group Ltd

LAPPSET®
CLOXX

220300

DATE: 21.2.2019

4A

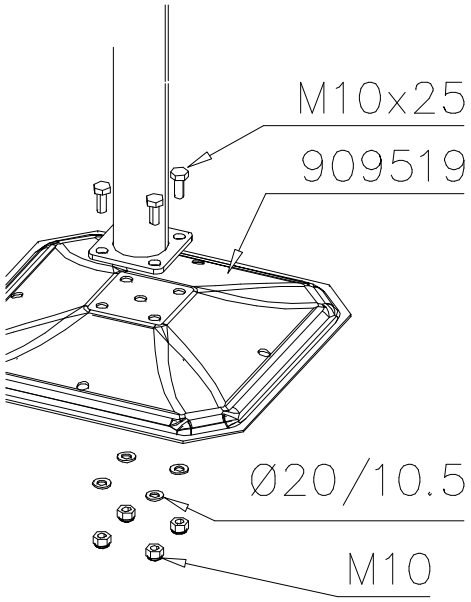

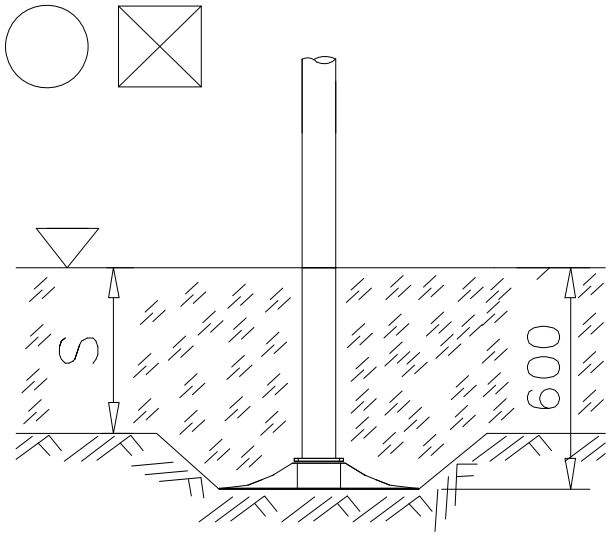

Copyright Lappset Group Ltd

LAPPSET®
CLOXX

220300

DATE: 21.2.2019

5

EN/AS Impact Area 20 m2

Falling Space 22 m2
Max Falling Height 1000 mm

1:50
0 2

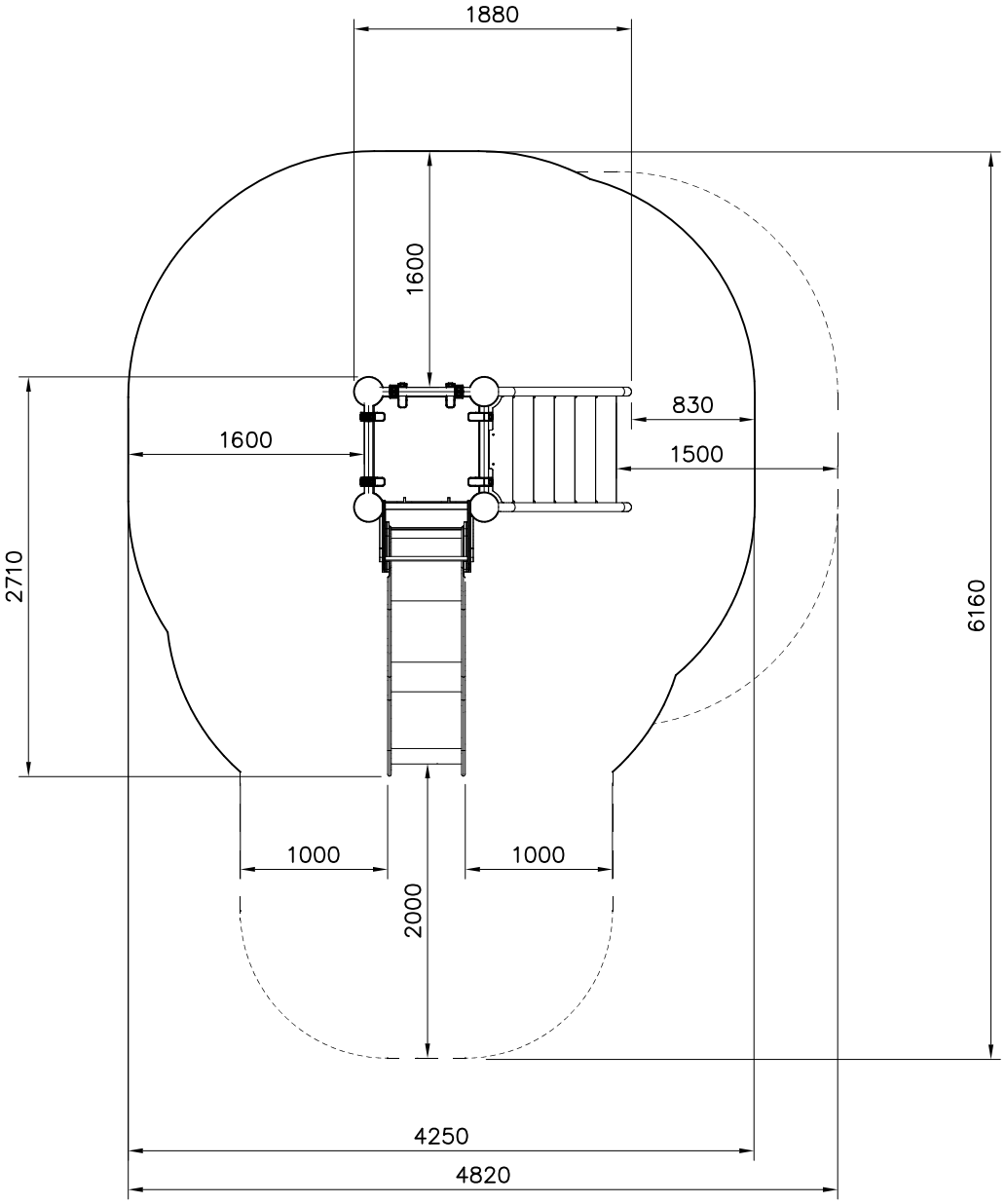

Copyright Lappset Group Ltd

LAPPSET®
CLOXX

220300

DATE: 21.2.2019

5A

1: 30

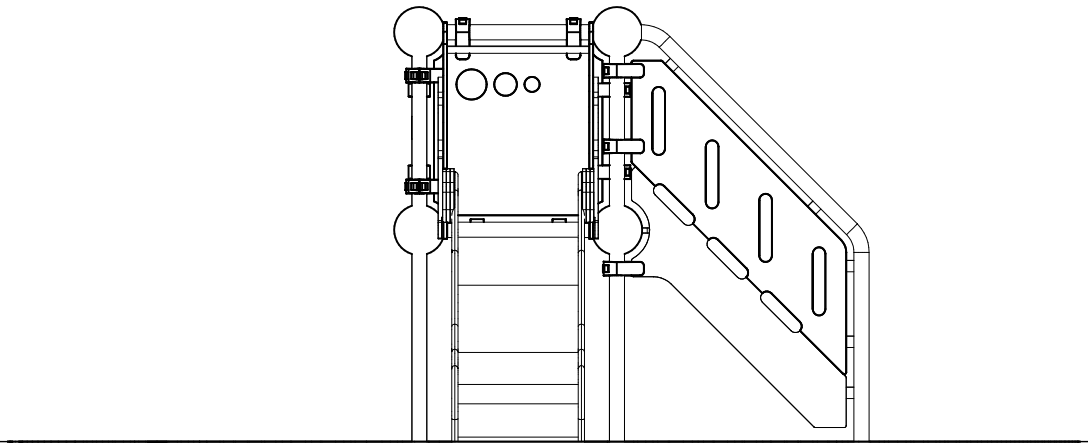

1: 30

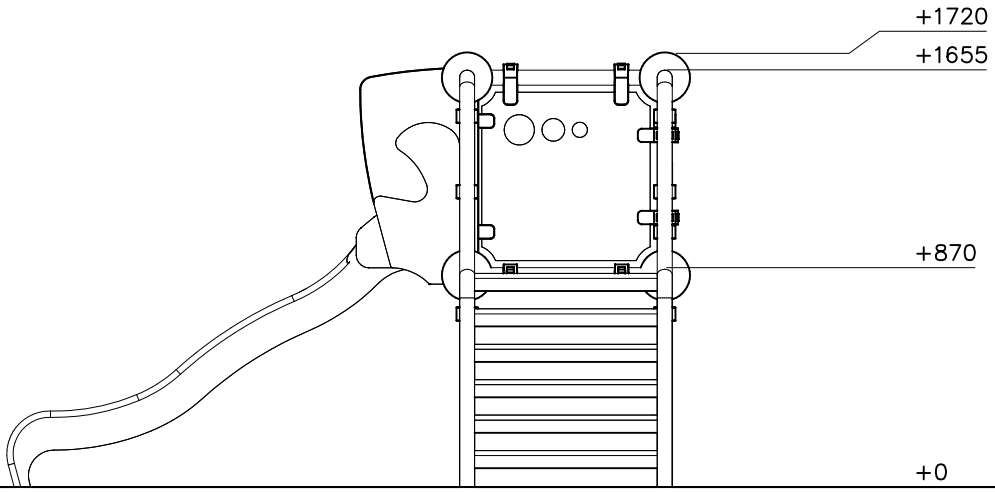

Copyright Lappset Group Ltd

LAPPSET®

CLOXX

220300

DATE: 21.2.2019

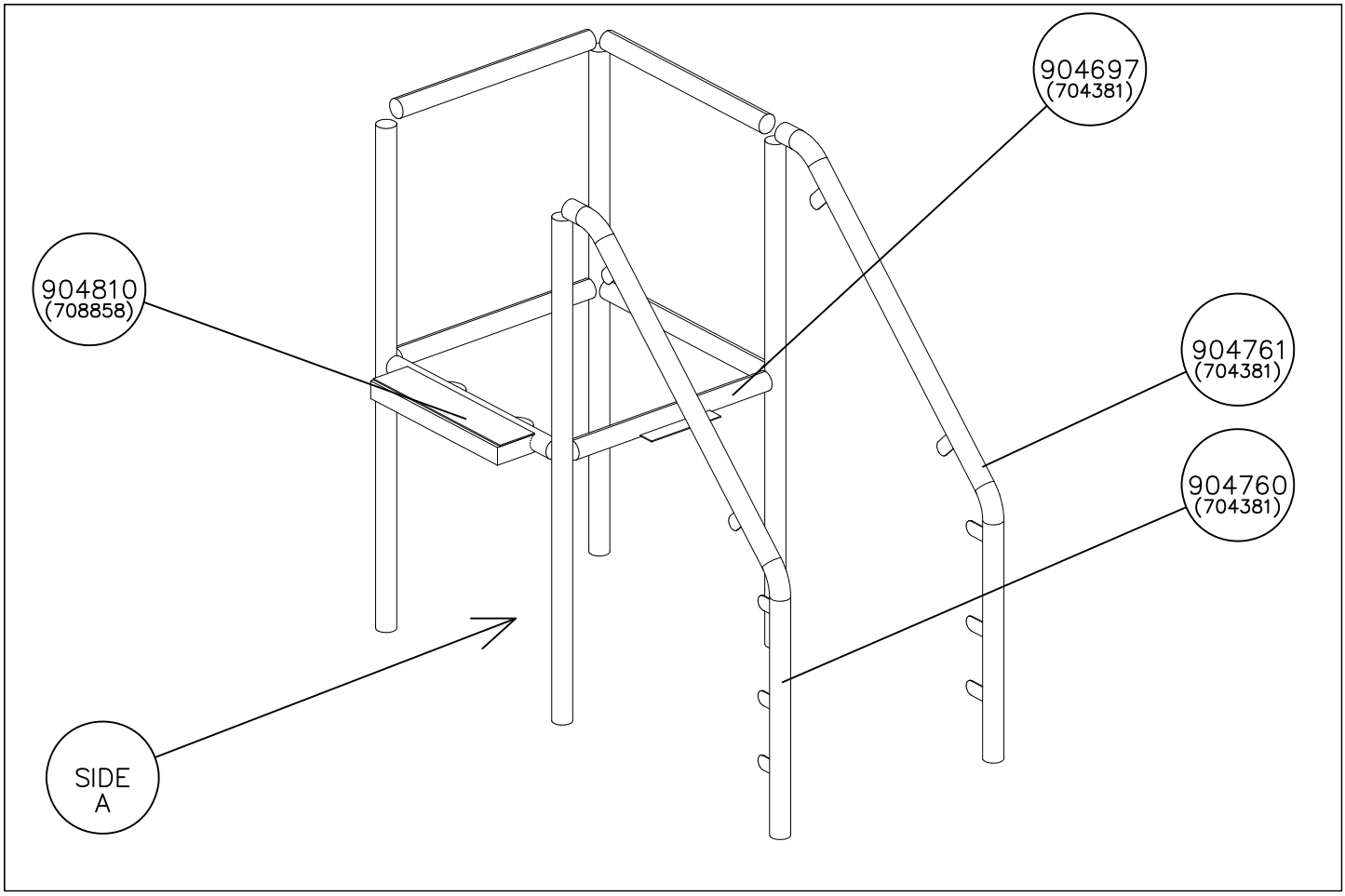

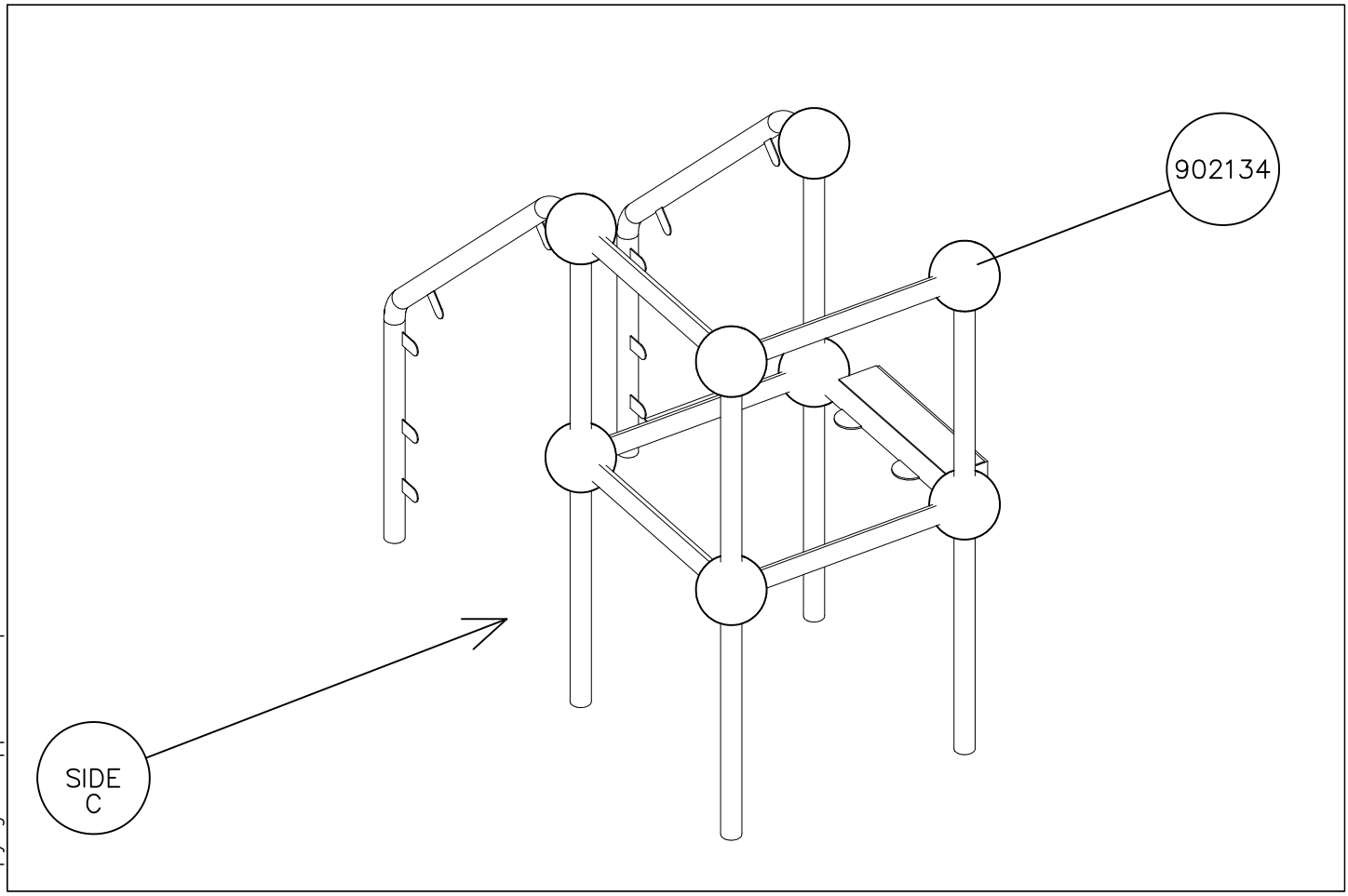

Copyright Lappset Group Ltd

LAPPSET®
CLOXX

220300

TOWER A
7

DATE: 21.2.2019

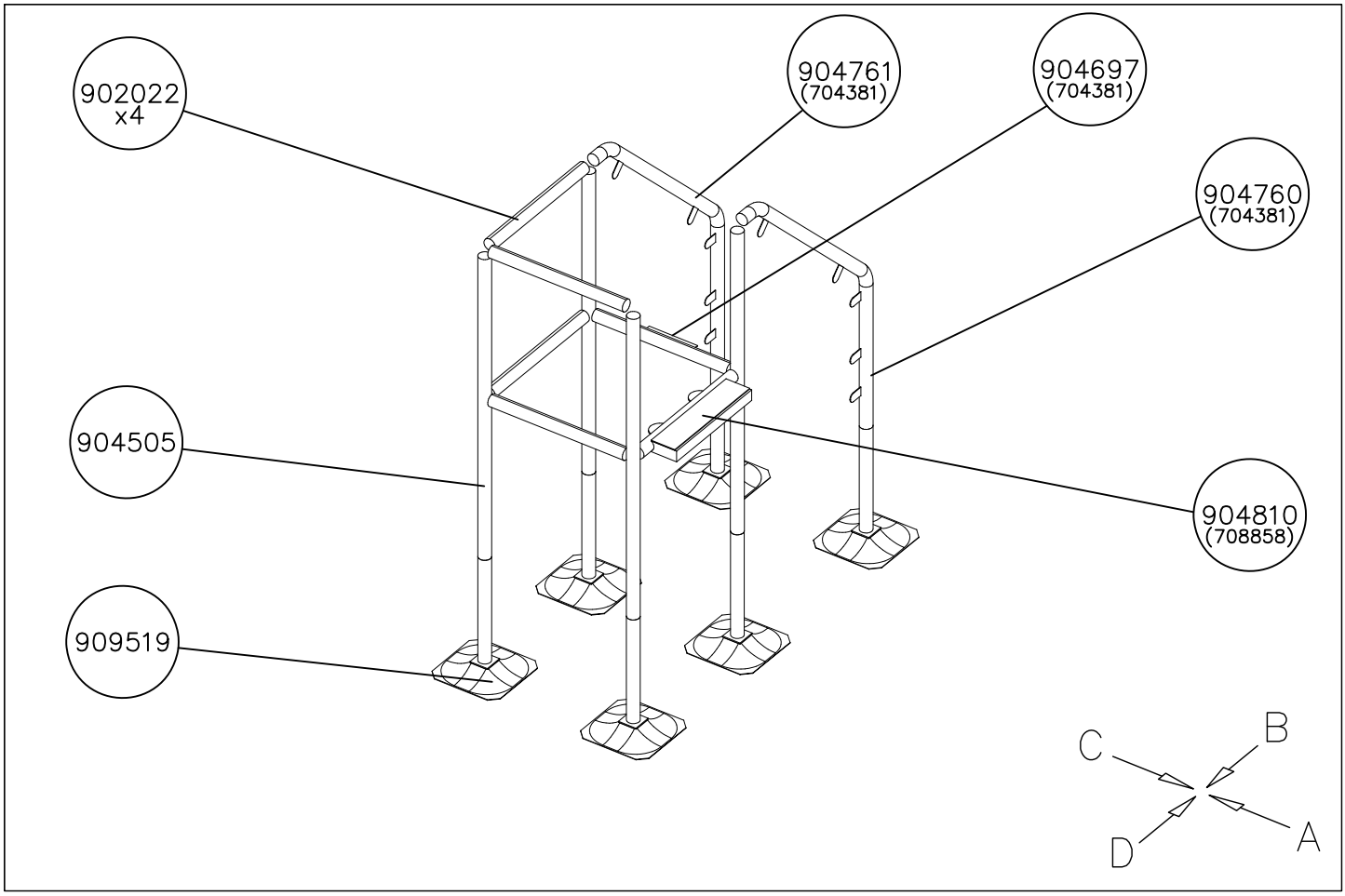

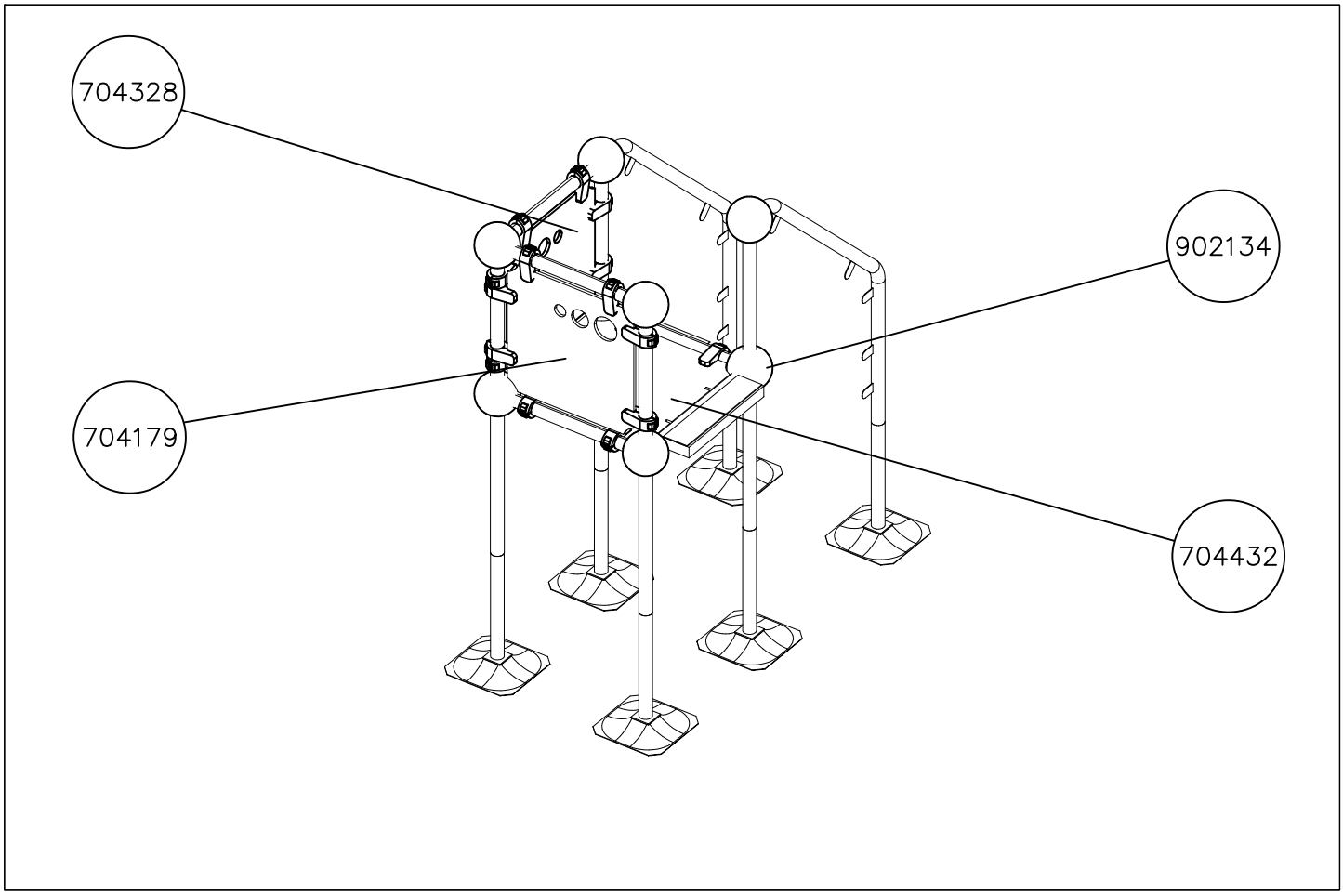

Copyright Lappset Group Ltd

LAPPSET®
CLOXX

220300

TOWER A
7a

DATE: 21.2.2019

1:50

A

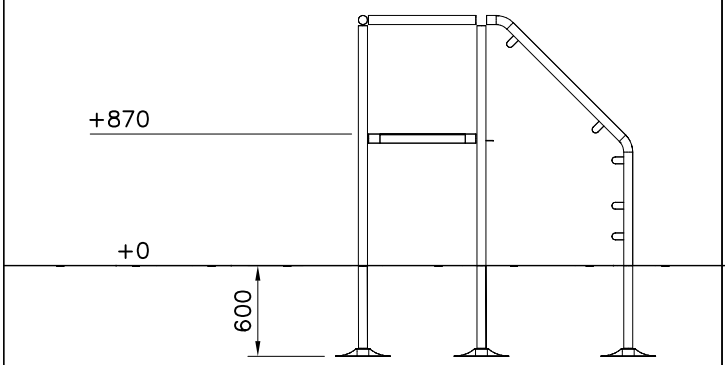

B

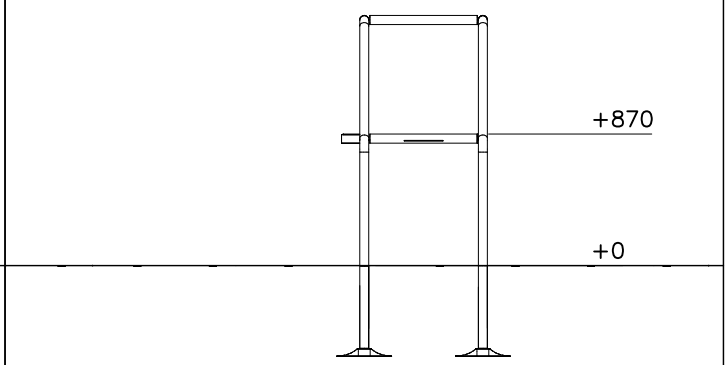

C

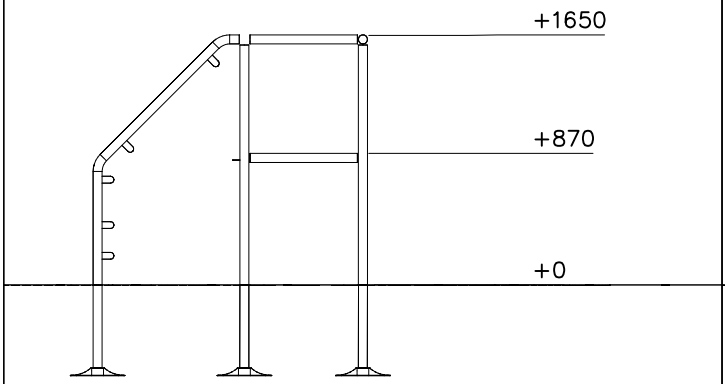

D

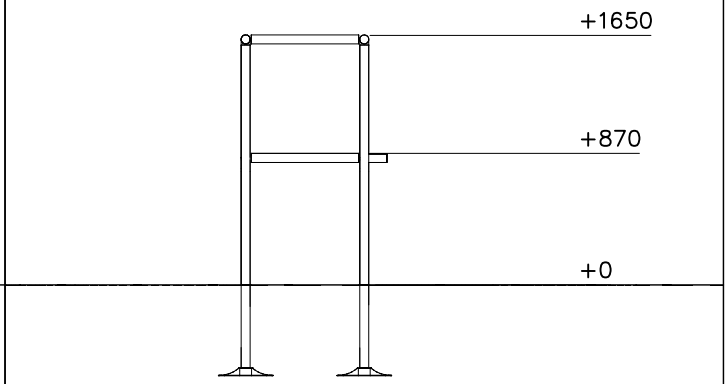

Copyright Lappset Group Ltd

LAPPSET®

CLOXX

220300

DATE: 21.2.2019

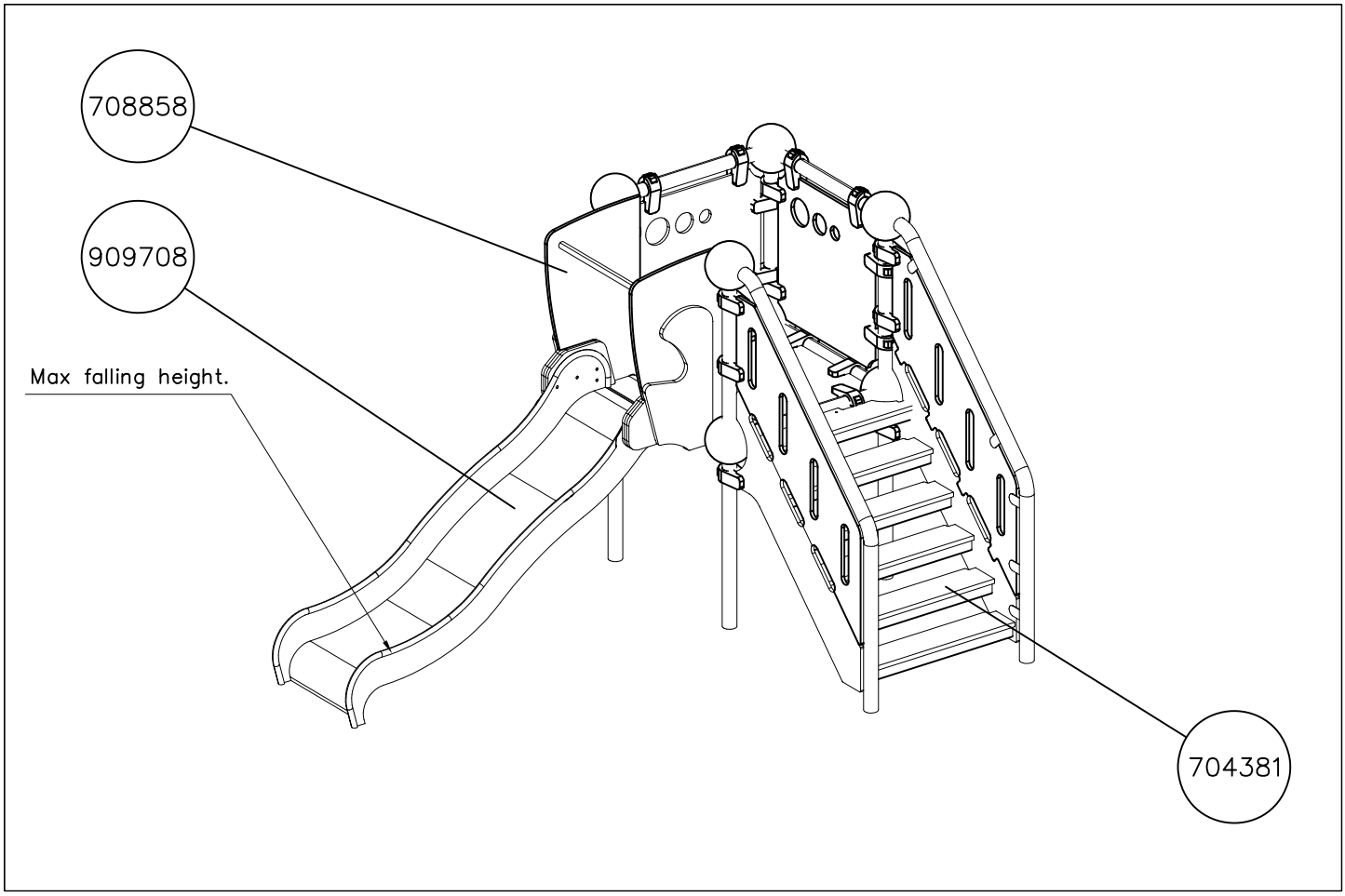

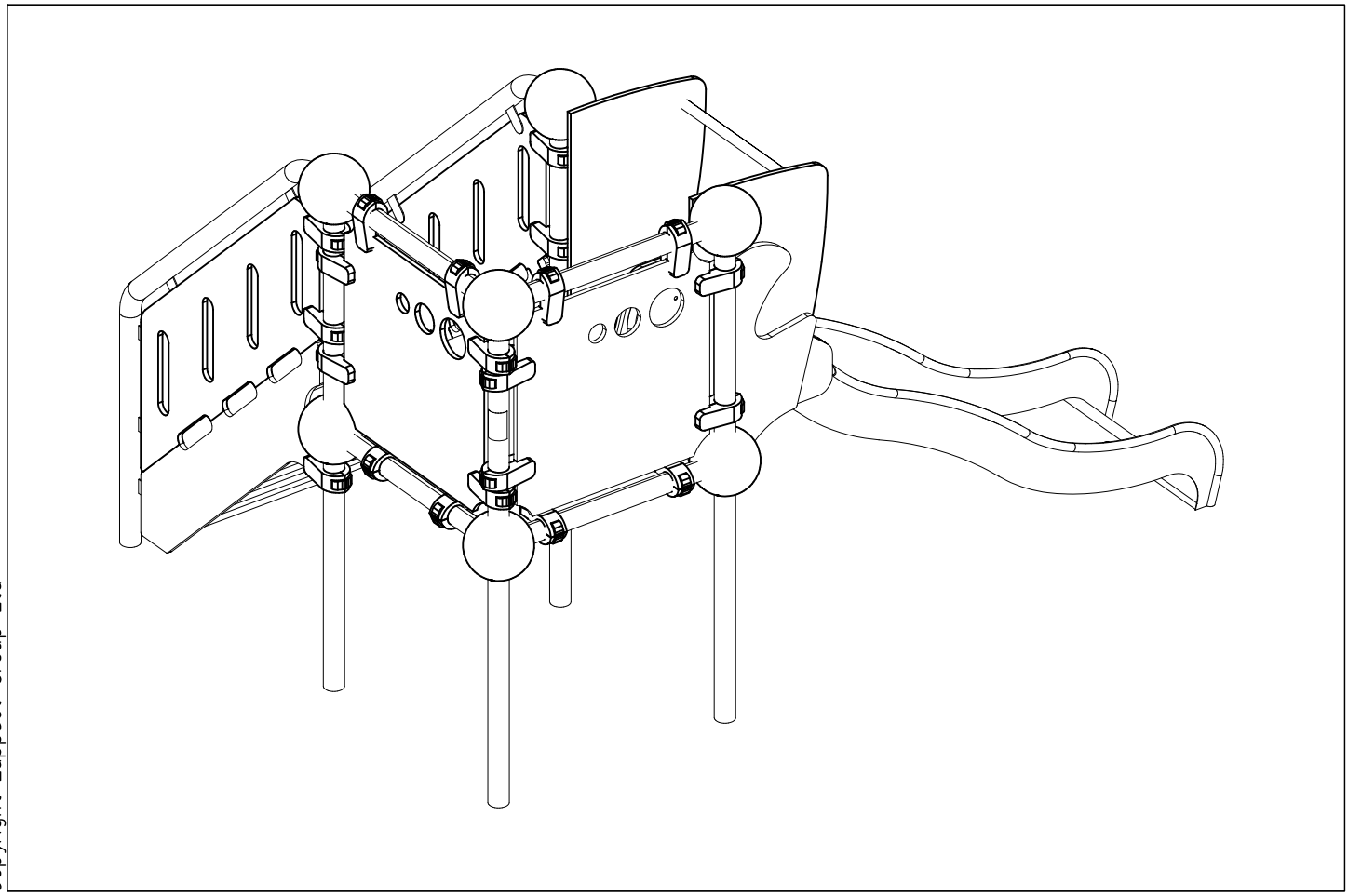

Copyright Lappset Group Ltd

LAPPSET®

Impact Area EN 1176

REF:
DATE: 20.2.2018

4x

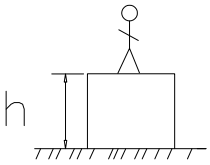

h < 600

Without movement and therefore without Impact Area

Totally hard surfaces.

Note. Lappset does <u>not</u> <u>recommend</u> totally hard surfaces at all.

E.g. concrete or asphalt

h < 600

With movement e.g. rocking

Materials with very limited impact attenuating properties.

E.g. wood

h < 1000

Materials with significant impact attenuating properties.

fine gravel 0–8 mm

grass

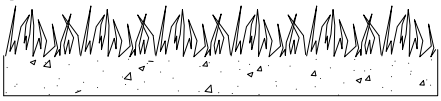

unsorted sand

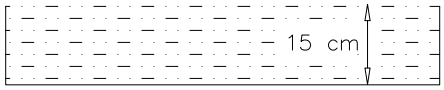

h < 3000

Loose fill material

E.g.
sand/gravel 0,25...8 mm D60/D10<3,0
Woodchips 5...30 mm
bark 20...80 mm

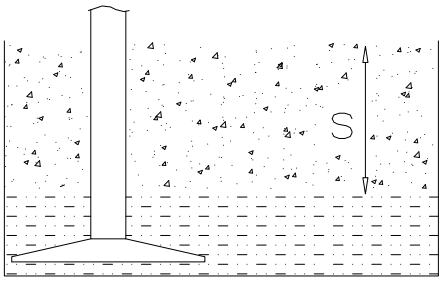

S	h
30 cm	< 2,0 m
40 cm	< 3,0 m

Syntethic granulates

S	h
40 mm	~> 1,2...1,3 m
50 mm	~> 1,5...1,7 m
60 mm	~> 1,8...2,0 m
70 mm	~> 2,1...2,5 m

Note. For accurate values, see manufacturer's instructions.

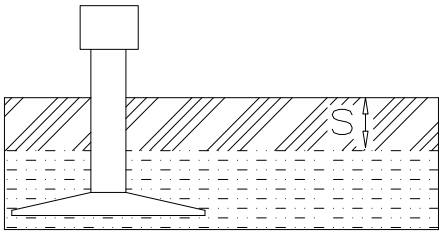

Copyright Lappset Group Ltd

LAPPSET®

EN 1176 FOUNDATION

REF:
DATE: 20.2.2018

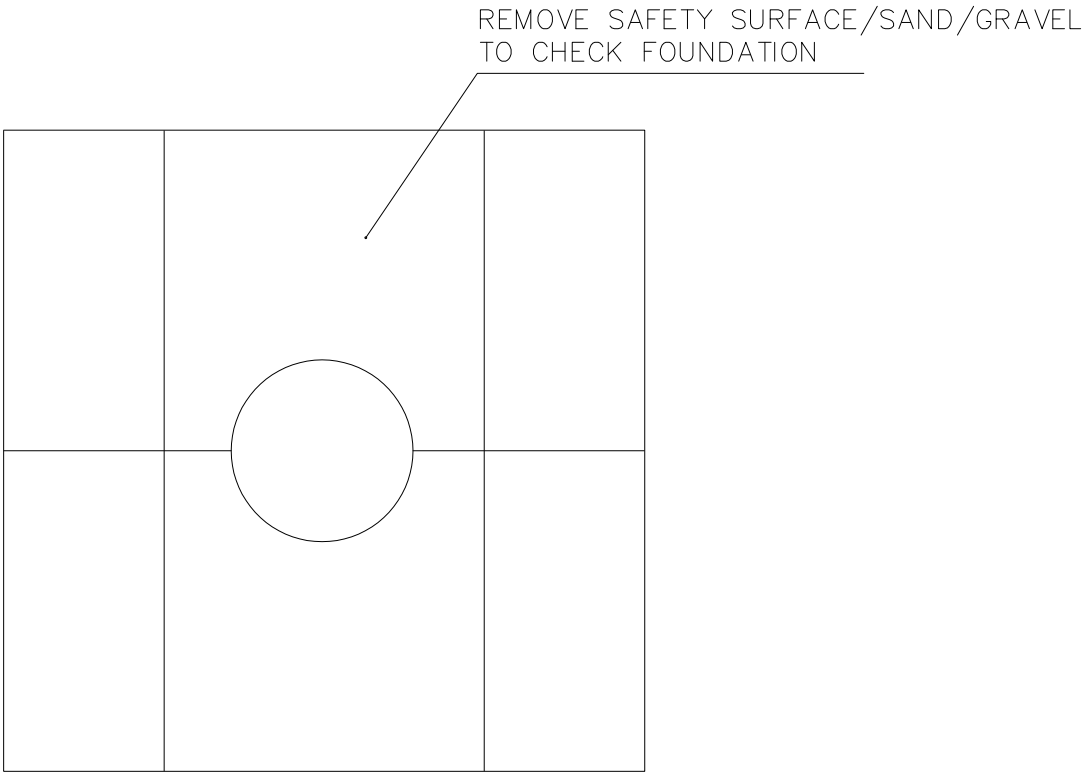

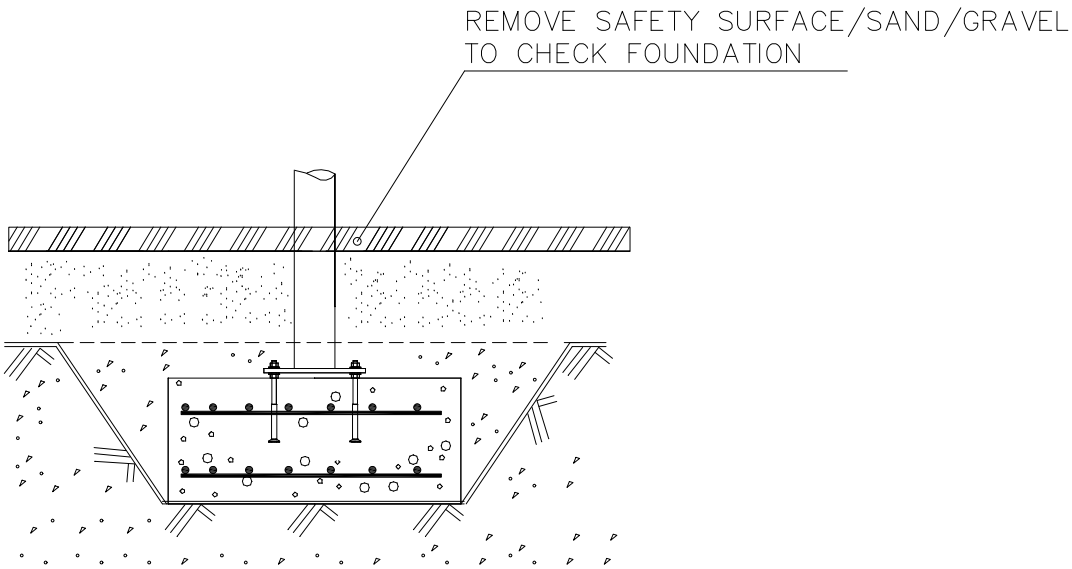

Copyright Lappset Group Ltd

LAPPSET®

902134

CLOXX

DATE: 3.5.2013

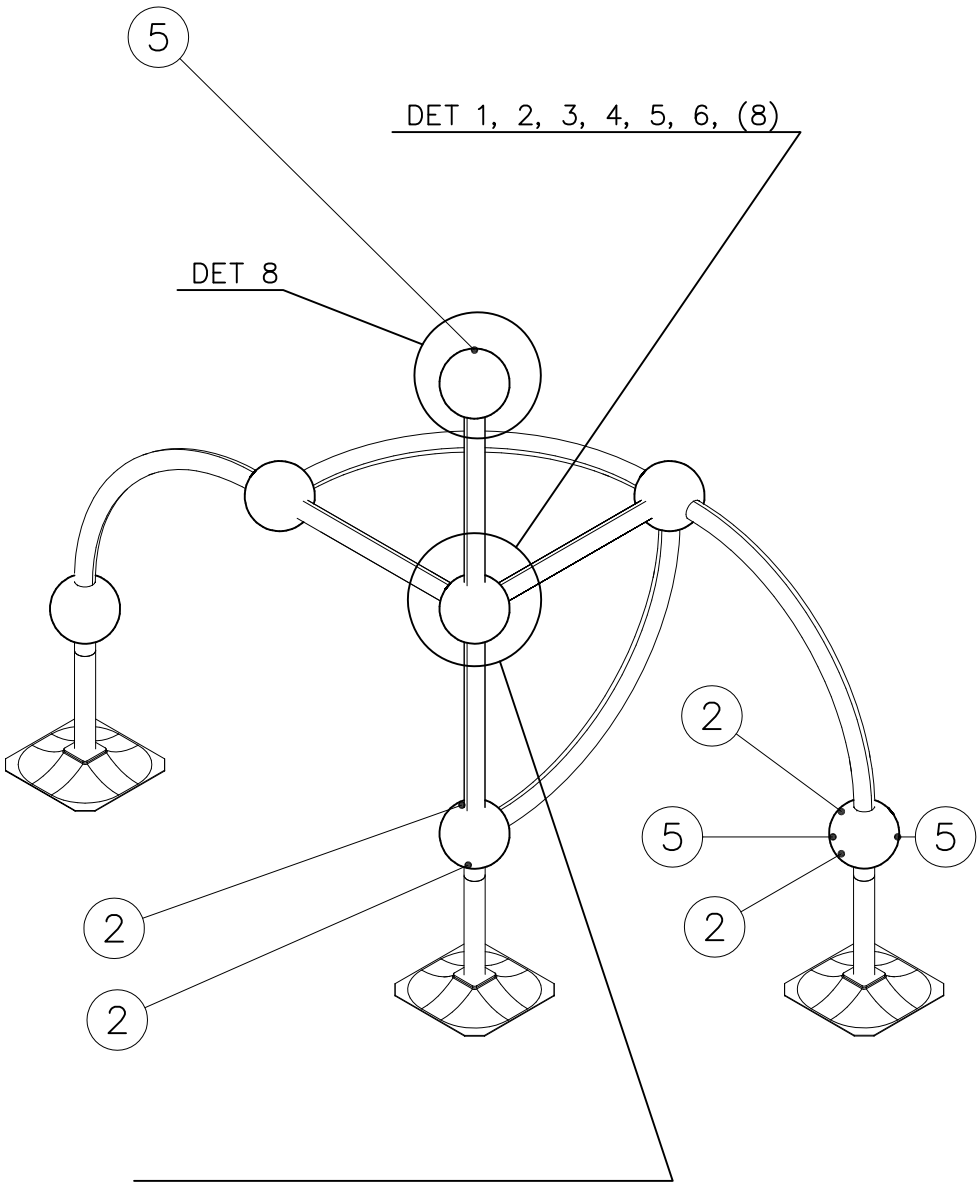

DO NOT TIGHTEN THE JOINTS UNTIL THE STRUCTURE IS COMPLETE.

	PCS		PCS
1 901803 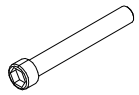 M12x90	2	2 901994 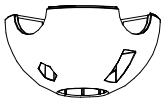 Ø190	2
3 902096 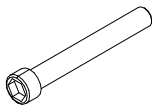 M12x120	4	4 902234 M12	6

Copyright Lappset Group Ltd

LAPPSET®

902134

CLOXX

DATE: 3.5.2013

DET 1

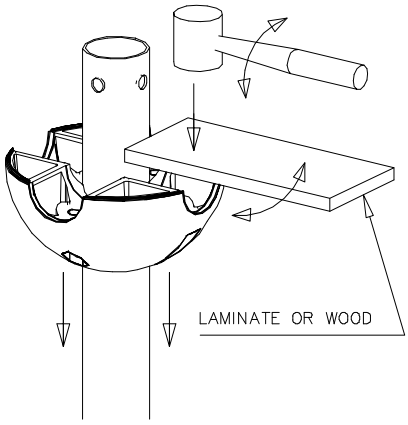

DET 2

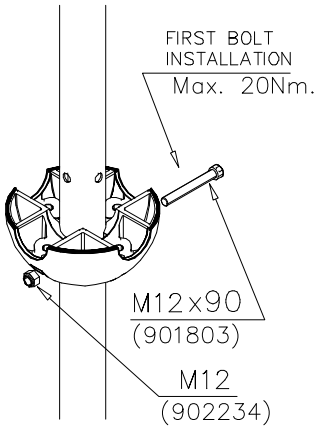

DET 3

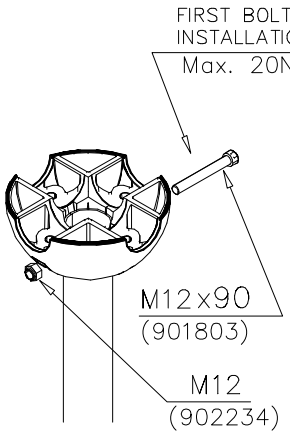

DET 4

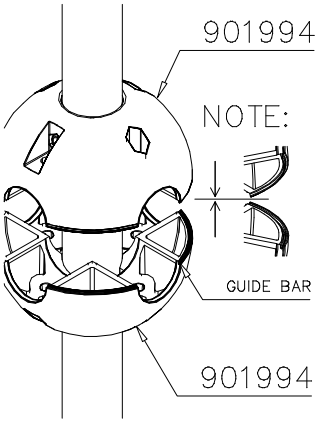

DET 5

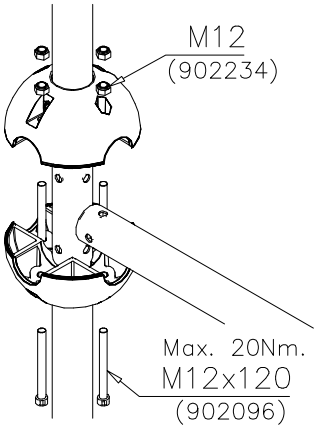

DET 6

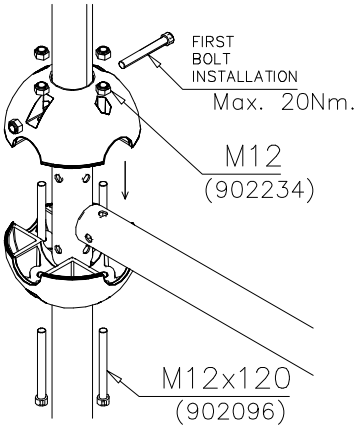

REMEMBER
FINAL
TIGHTENING

DET 7

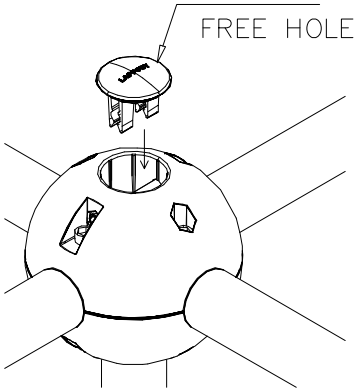

DET 8

Copyright 1998 Lappset Group Ltd

1

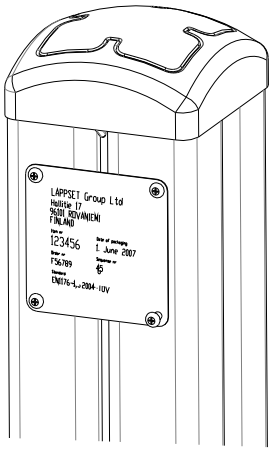

2

Tuotekyltti tulee tuotteen mukana yhdellä seuraavista tavoista:

1) Metallinen tuotekyltti ja kiinnitysruuvit

- Kiinnitä tuotekyltti ruuveilla tolppaan noin 2 metrin korkeuteen kuvan 1 mukaisesti.

2) Tuotekylttitarra

- Puhdista maalattu metalli- tai vaneripinta pölystä ja kosteudesta. Liimaa tarra kuvan 2 mukaisesti.
- Huom. Älä kiinnitä tarraa karheapintaiseen laminaattiin tai maalattuun puuhun.

Vår produktmärkning levereras på ett av följande sätt:

1) Produktskylt i metall

- Fäst skylten med de medföljande skruvarna

2) Självhäftande produktetikett

- Rengör den pulverlackerade metallytan eller laminatytan så att den blir fri från smuts och fukt. Fäst etiketten enligt fig. 2.
- Obs! Fäst ej etiketten på detaljer med skrovlig yta eller på målat trä.

Product label is delivered by one of following ways:

1) Metal product label and screws

- Fasten the label with screws.

2) Label sticker

- Clean the painted metal or plywood surface from dirt and moisture. Fasten the sticker as shown in the figure 2.
- Note. Do not attach the sticker to rough surfaced laminate or painted wood.

La plaque d’informations produit est livrée sous l’une de ces 3 formes :

1) Plaque métallique et vis

- Fixez la plaque à l’aide des vis.

2) Etiquette autocollante

- Avant de coller l’étiquette, nettoyez le composant métallique peint ou la plaque de contreplaqué, de toute saleté. La surface doit être sèche (voir image 2).
- Attention, ne pas coller l’étiquette sur une surface lamellé-collée irrégulière ou sur du bois peint.

Die Auslieferung des Produktaufklebers erfolgt auf eine dieser Arten:

1) Produkt-Schild aus Metall incl. Schrauben

- Die Befestigung des Schildes erfolgt mittels der Schrauben.

2) Aufkleber

- Entfernen Sie zunächst Schmutz und Feuchtigkeit vom lackierten Metall bzw. von der Holzoberfläche und bringen Sie den Aufkleber wie im Bild oben rechts beschrieben auf den gesäuberten Untergrund auf.
- Beachten Sie: Bringen Sie den Aufkleber nicht auf raues laminiertes oder lackiertes Holz an.

LAPPSET®

CLOXX

WALL 2

DATE: 7.5.2012

704179	704180	PCS	902124	PCS	902232	PCS	902233	PCS	980161	PCS	PCS
		1		12		6		6		12	
	GRAY		150x50x50		M10x55		M10x30		M10		
704328	704329	PCS	902124	PCS	902232	PCS	902233	PCS	980161	PCS	PCS
		1		12		6		6		12	
	YELLOW		150x50x50		M10x55		M10x30		M10		
703997	703998	PCS	902124	PCS	902232	PCS	902233	PCS	980161	PCS	PCS
		1		12		6		6		12	
			150x50x50		M10x55		M10x30		M10		
704002	704000	PCS	902124	PCS	902232	PCS	902233	PCS	980161	PCS	PCS
		1		12		6		6		12	
			150x50x50		M10x55		M10x30		M10		
704361	704362	PCS	902124	PCS	902232	PCS	902233	PCS	980161	PCS	PCS
		1		12		6		6		12	
	YELLOW		150x50x50		M10x55		M10x30		M10		
		PCS		PCS		PCS		PCS		PCS	PCS
		PCS		PCS		PCS		PCS		PCS	PCS
		PCS		PCS		PCS		PCS		PCS	PCS

Copyright Lappset Group Ltd

LAPPSET®

CLOXX

WALL 2

DATE: 7.5.2012

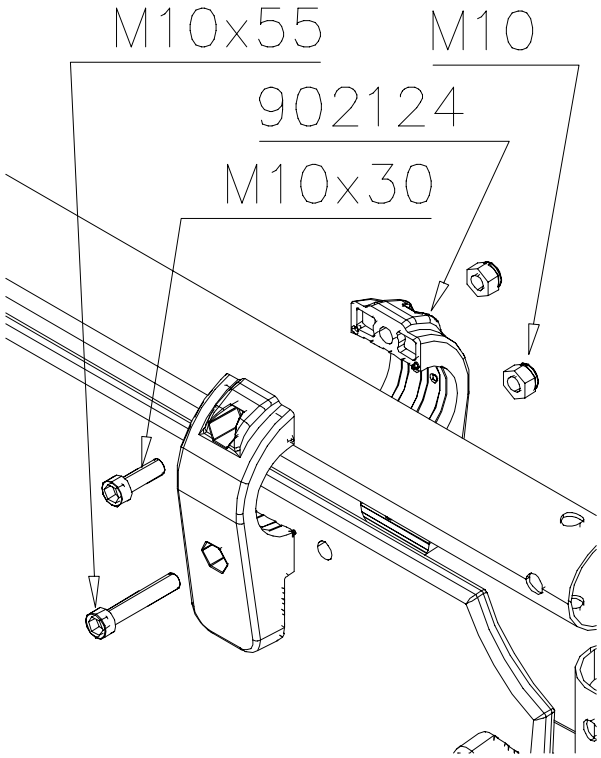

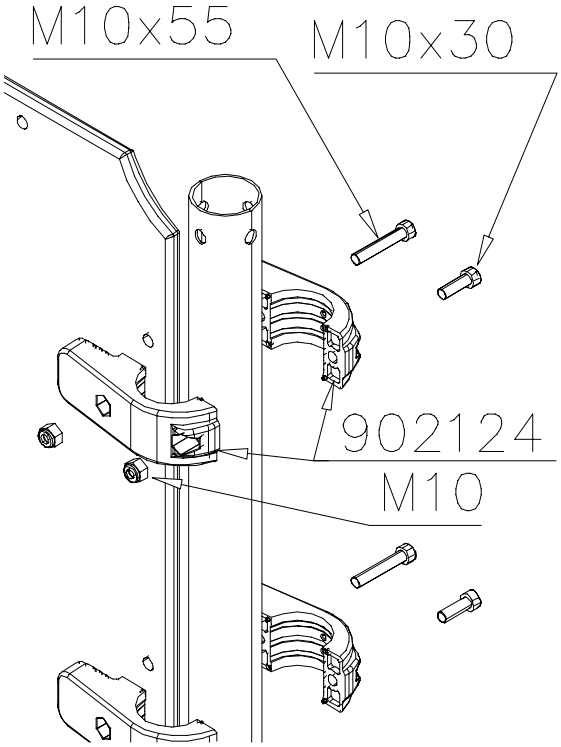

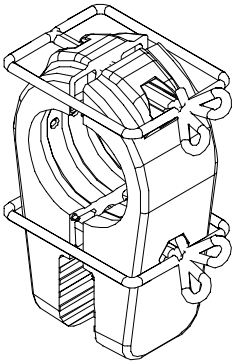

NOTE:
Use a wire marked pairs of the same junction.

Huom!
Käytä langalla merkittyä paria samassa liitoksessa.

Copyright 1998 Lappset Group Ltd

LAPPSET®

704381

CLOXX

DATE: 21.11.2012

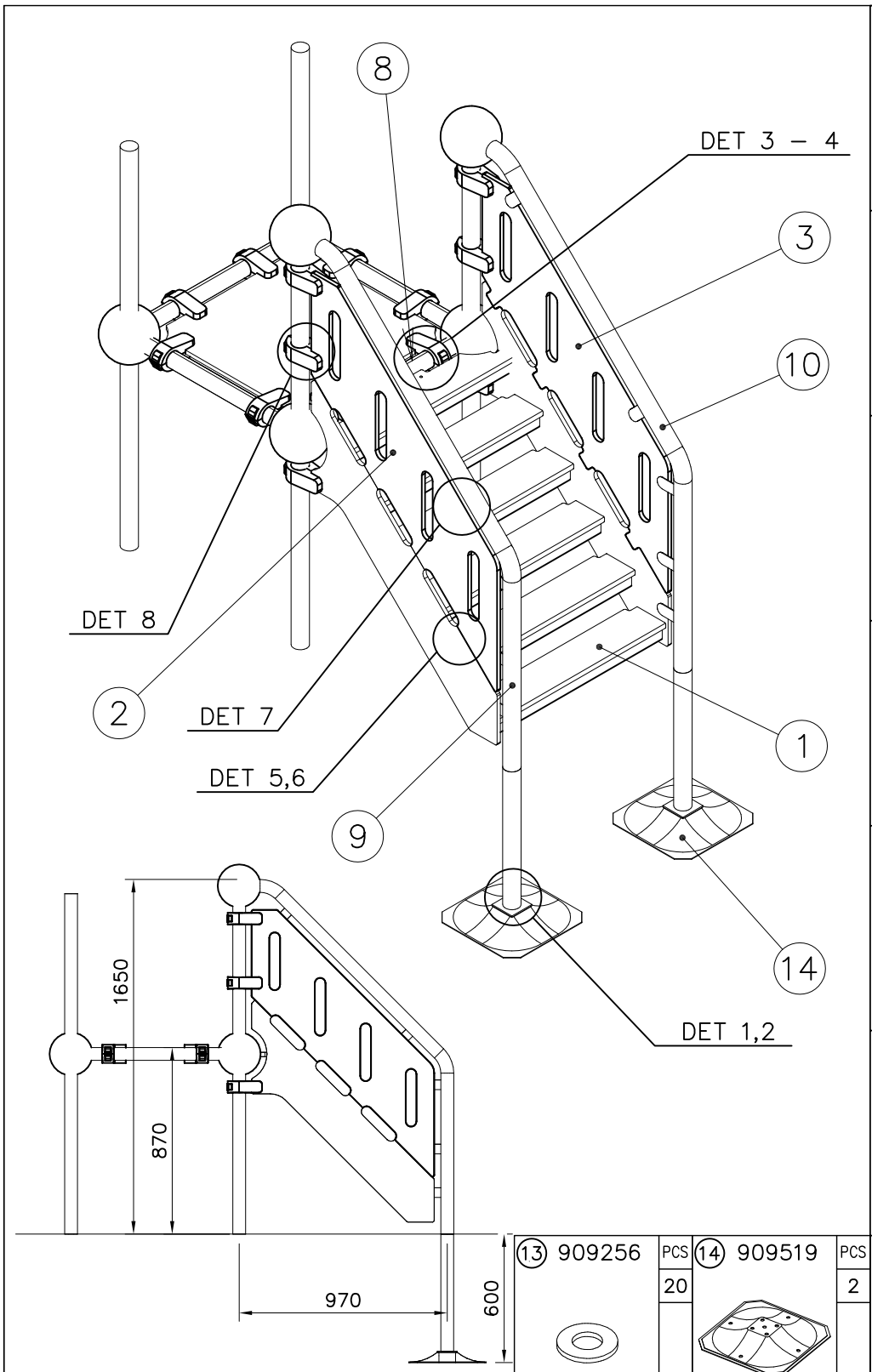

		PCS
1	704309	1
2	704310 LEFT	1
3	704311 RIGHT	1
4	902124 150x50x50	12
5	902232 M10x55	6
6	902233 M10x30	6
7	904068 M8x40	2
8	904697 Ø60.3x2.9x710	1
9	904760 LEFT	1
10	904761 RIGHT	1
11	905083 Ø32	20
12	905112 Ø22	20
13	909256 Ø16/8.4x1.6	20
14	909519 50x380x380	2
15	909637 M10	8
16	909638 Ø20/10.5	16
17	909639 M10x25	8
18	909852 M8x30	8
19	909855 M8x35	10
20	980160 M8	20
21	980161 M10	12

Copyright Lappset Group Ltd

LAPPSET®

704381

CLOXX

DATE: 21.11.2012

DET 1

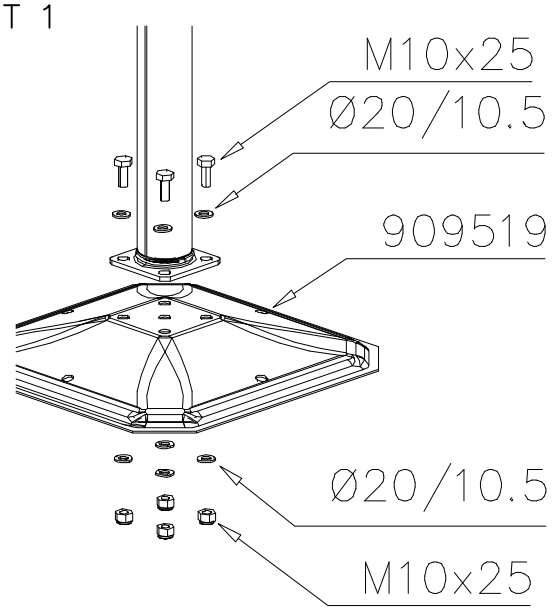

DET 2

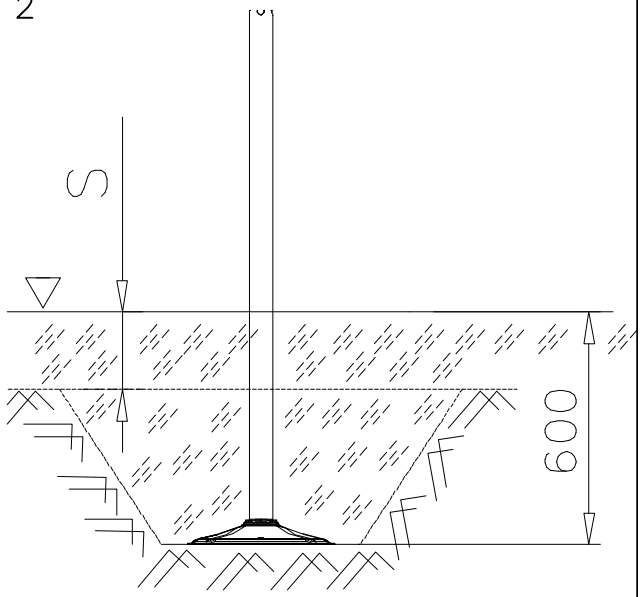

DET 3

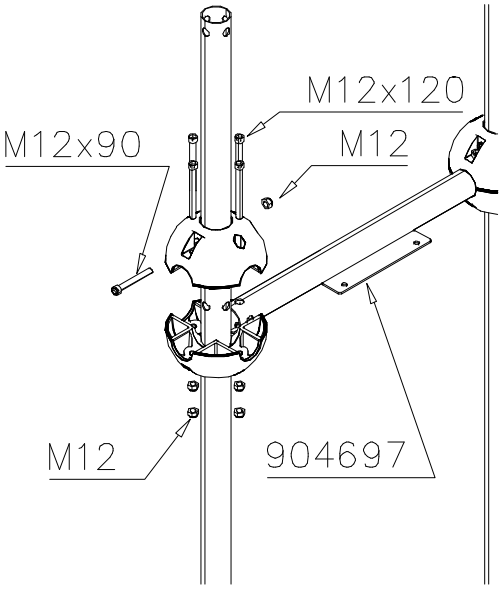

DET 3a

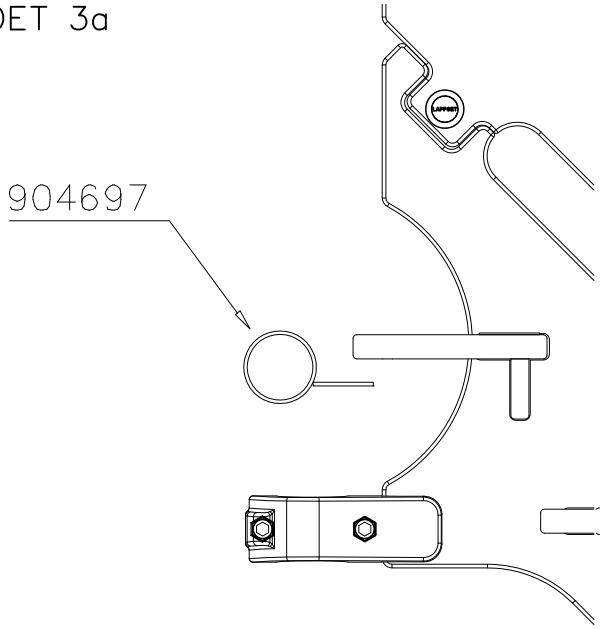

DET 4

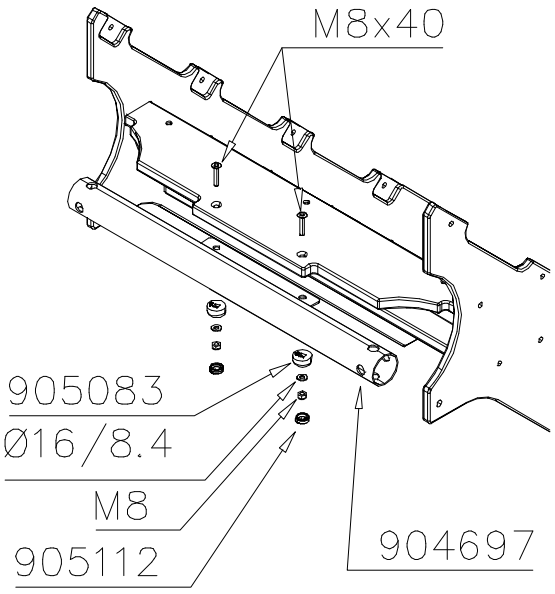

DET 5

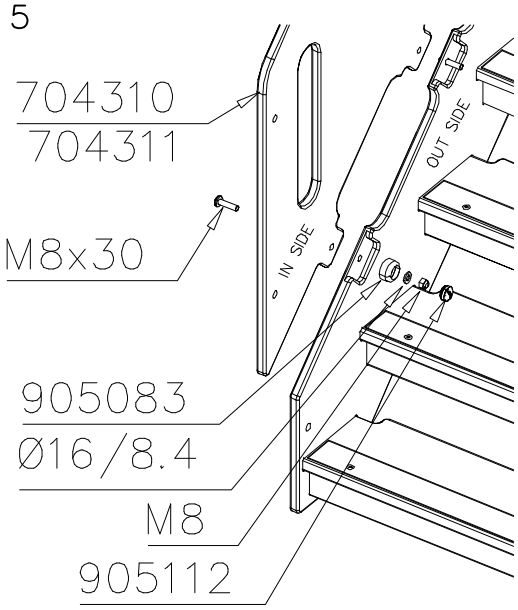

Copyright 1998 Lappset Group Ltd

LAPPSET®

704381

CLOXX

DATE: 21.11.2012

DET 6

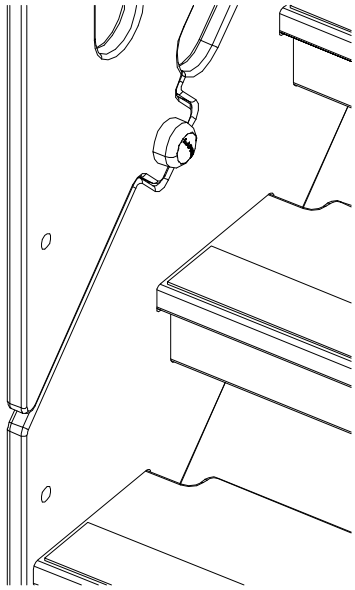

DET 7

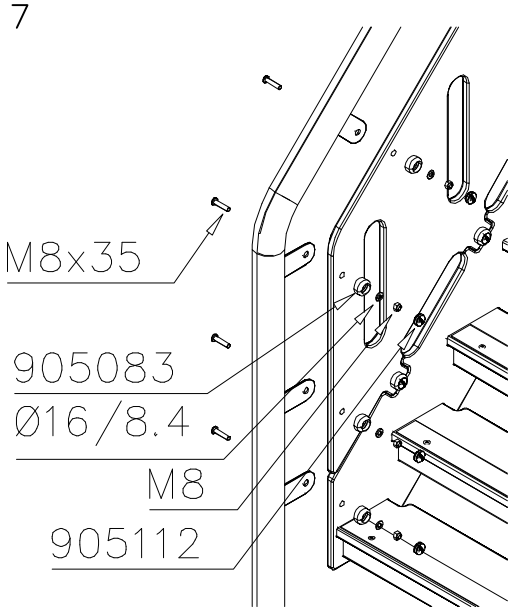

DET 8

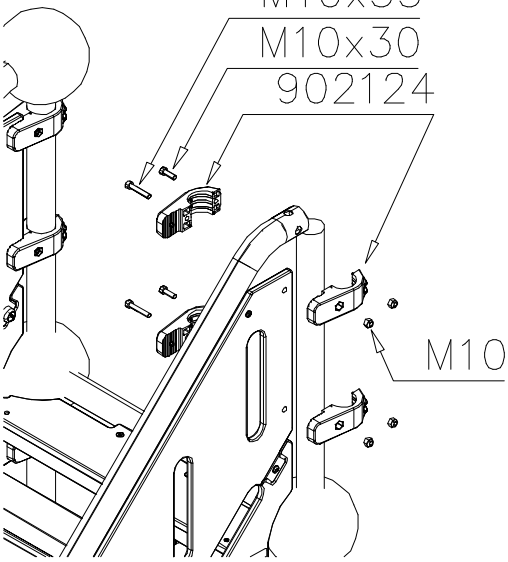

Copyright 1998 Lappset Group Ltd

LAPPSET®

CLOXX

FLOOR (SLIDE)

DATE: 3.10.2013

704432	704038	PCS	902124	PCS	902232	PCS	902233	PCS	980161	PCS		PCS
		1		12		6		6		12		
			150x50x50		M10x55		M10x30		M10			
		PCS	909109	PCS	905090	PCS	980154	PCS	909248	PCS	905115	PCS
				2		2		2		2		2
			M12x40		Ø45		Ø24/13		M12		Ø32	
		PCS		PCS		PCS		PCS		PCS		PCS
704447	704446	PCS	902124	PCS	902232	PCS	902233	PCS	980161	PCS		PCS
		1		12		6		6		12		
			150x50x50		M10x55		M10x30		M10			
		PCS	909109	PCS	905090	PCS	980154	PCS	909248	PCS	905115	PCS
				2		2		2		2		2
			M12x40		Ø45		Ø24/13		M12		Ø32	
		PCS		PCS		PCS		PCS		PCS		PCS
704666	704667	PCS	902124	PCS	902232	PCS	902233	PCS	980161	PCS		PCS
		1		12		6		6		12		
			150x50x50		M10x55		M10x30		M10			
		PCS	909109	PCS	905090	PCS	980154	PCS	909248	PCS	905115	PCS
				2		2		2		2		2
			M12x40		Ø45		Ø24/13		M12		Ø32	

Copyright Lappset Group Ltd

LAPPSET®

CLOXX

FLOOR (SLIDE)

DATE: 3.10.2013

704684	704685	PCS 1	902124 150x50x50	PCS 12	902232 M10x55	PCS 6	902233 M10x30	PCS 6	980161 M10	PCS 12	PCS
		PCS	909109 M12x40	PCS 2	905090 Ø45	PCS 2	980154 Ø24/13	PCS 2	909248 M12	PCS 2	905115 Ø32 PCS 2
		PCS		PCS		PCS		PCS		PCS	PCS
704692	704693	PCS 1	902124 150x50x50	PCS 12	902232 M10x55	PCS 6	902233 M10x30	PCS 6	980161 M10	PCS 12	PCS
		PCS	909109 M12x40	PCS 2	905090 Ø45	PCS 2	980154 Ø24/13	PCS 2	909248 M12	PCS 2	905115 Ø32 PCS 2
		PCS		PCS		PCS		PCS		PCS	PCS
		PCS		PCS		PCS		PCS		PCS	PCS
		PCS		PCS		PCS		PCS		PCS	PCS

Copyright Lappset Group Ltd

LAPPSET®

CLOXX

FLOOR (SLIDE)

DATE: 3.10.2013

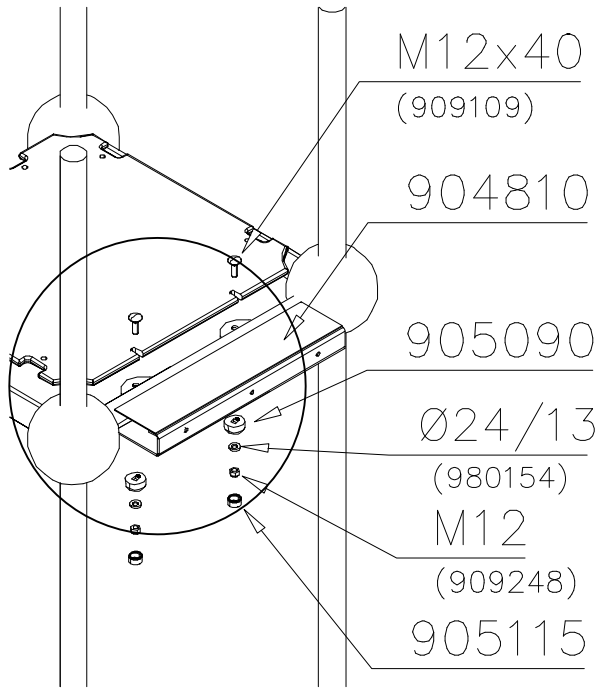

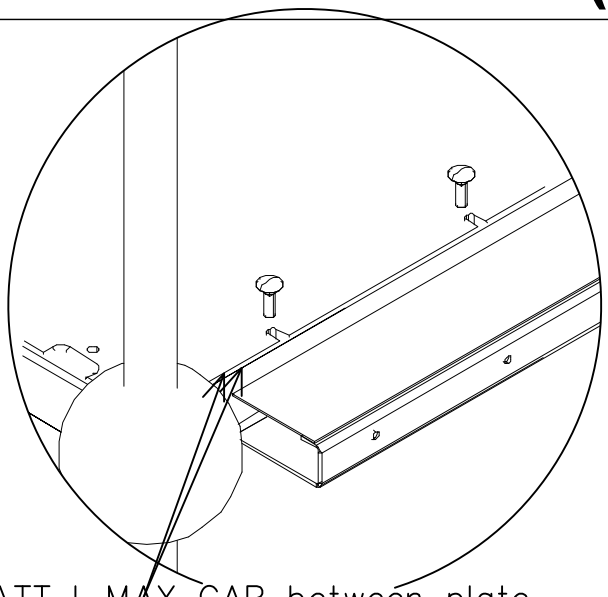

ATT ! MAX GAP between plate and tube is 6mm

HUOM ! MAKSIMI VÄLI lattialevyllä ja putkella on 6mm

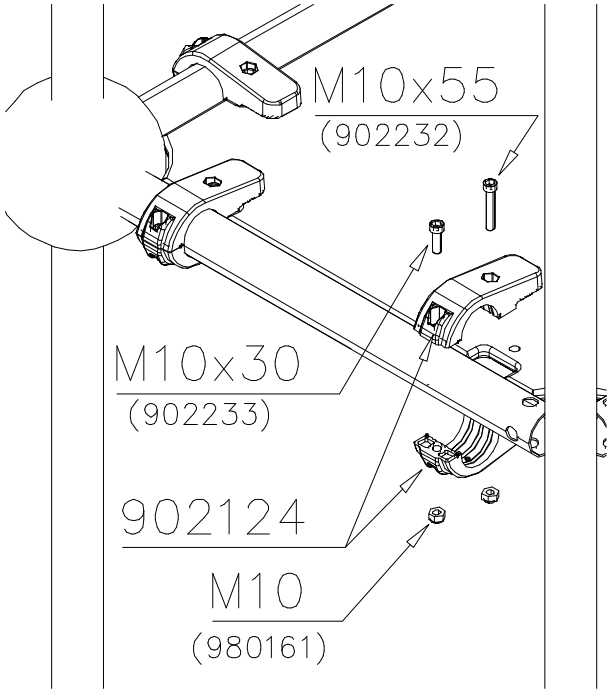

KÄYTÄ TARVITTAESSA SAMAA LEVYÄ VASEMALLE TAI OIKEALLE.

IF NECESSARY USE SAME PLATE LEFT OR RIGHT.

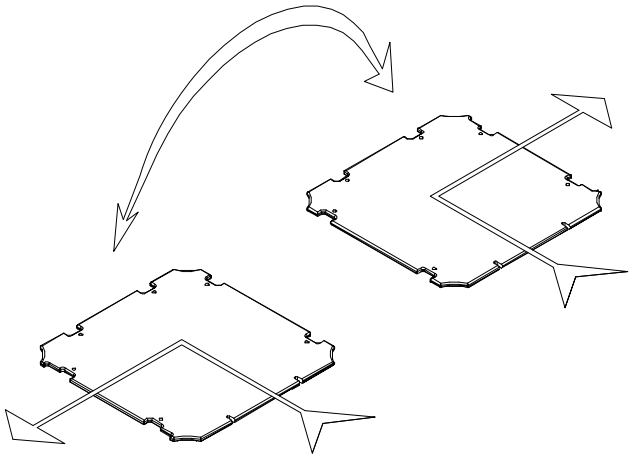

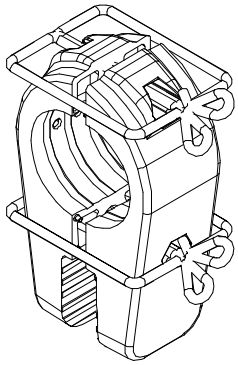

NOTE:
Use a wire marked pairs of the same junction.

Huom!
Käytä langalla merkittyä paria samassa liitoksessa.

Copyright 1998 Lappset Group Ltd

LAPPSET®

708858

CLOXX

DATE: 11.2.2019

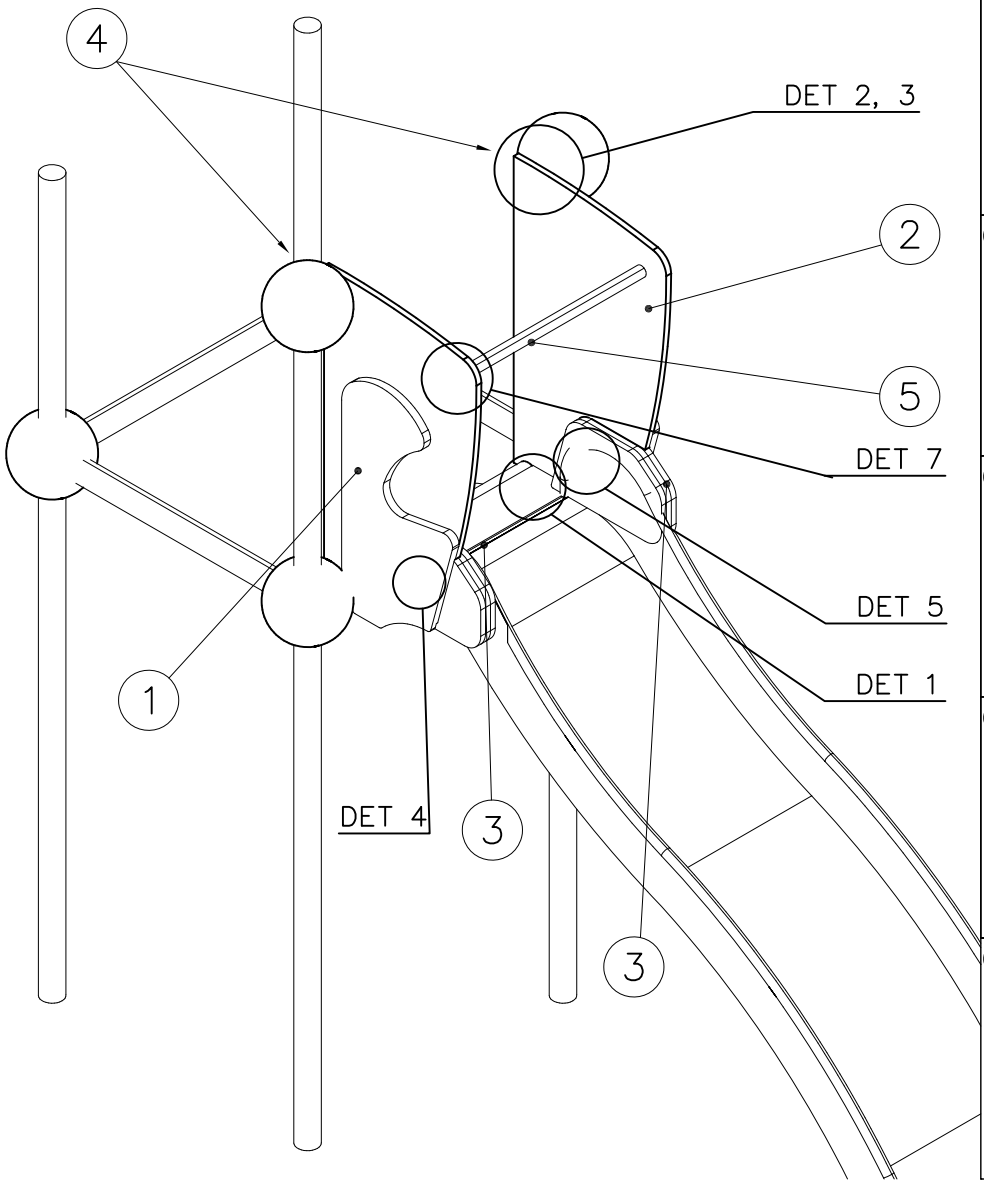

		PCS	
1	704696	1	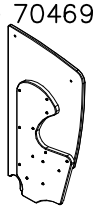
2	704697	1	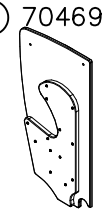
3	904810	1	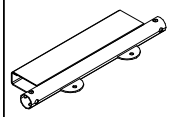
4	904818	2	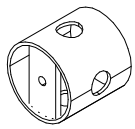
5	904833	1	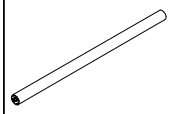 Ø30x565
6	909876	4	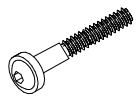 M8x40
7	980152	9	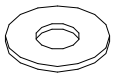 Ø24/8.4
8	900498	6	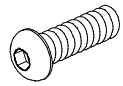 M8x50
9	999561	1	10 g
10	709042	2	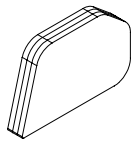
11	909855	8	M8x35
12	910683	4	Ø11
13	909850	3	M8x25

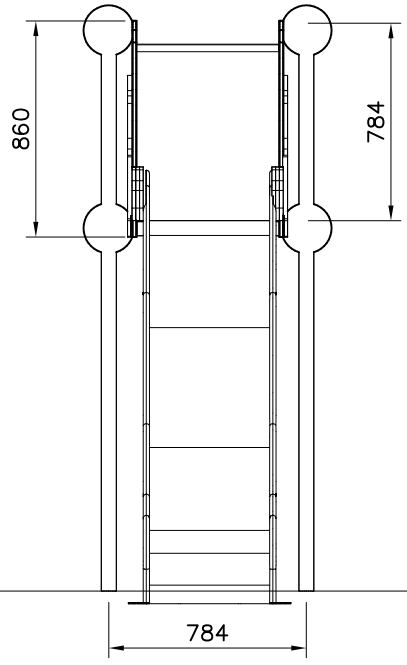

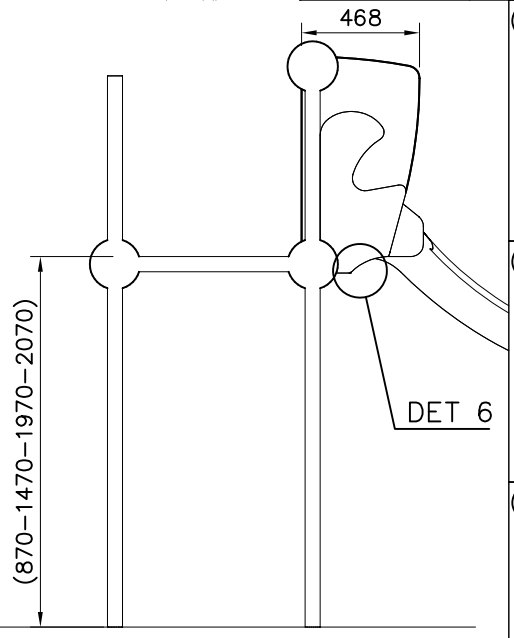

Copyright Lappset Group Ltd

LAPPSET®

708858

CLOXX

DATE: 11.2.2019

DET 1

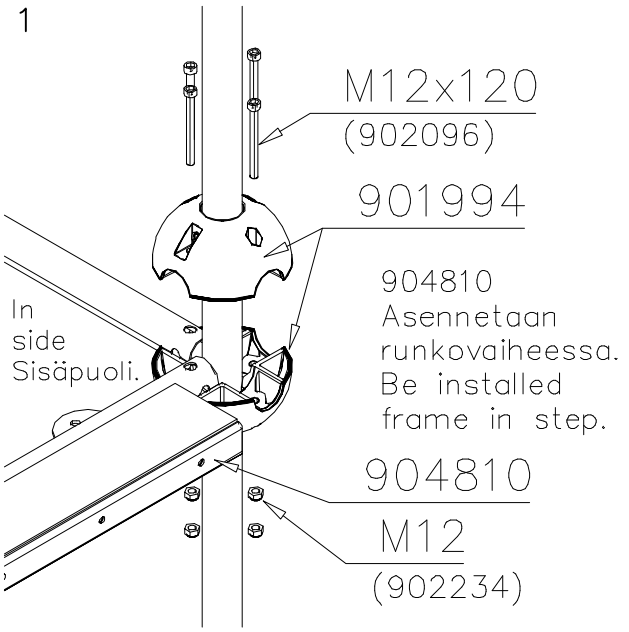

DET 2

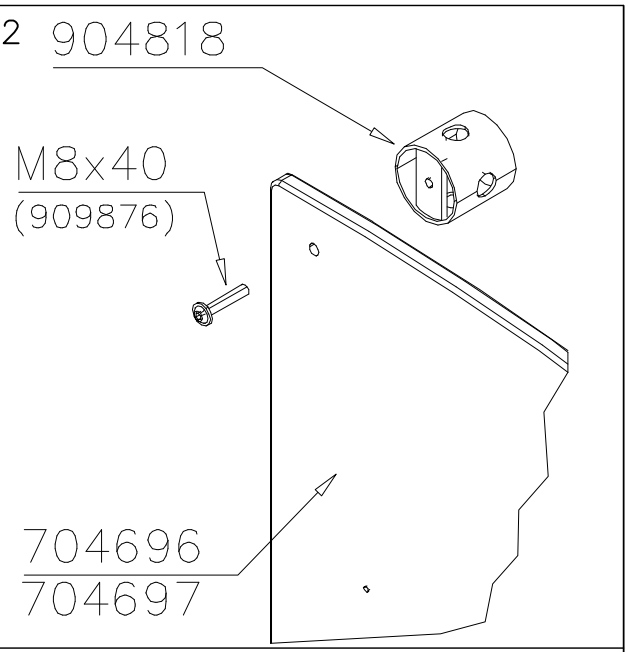

DET 3

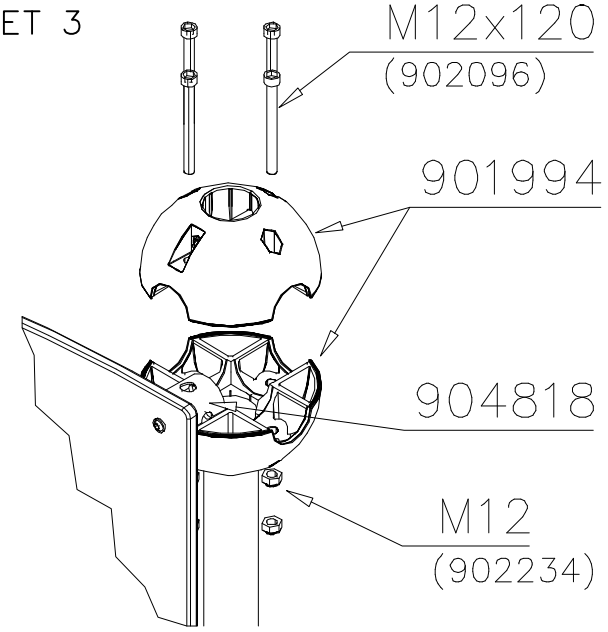

DET 4

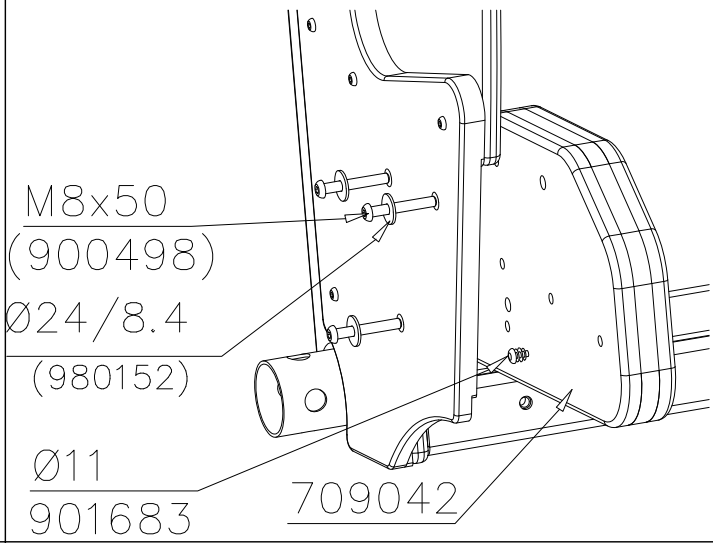

DET 5

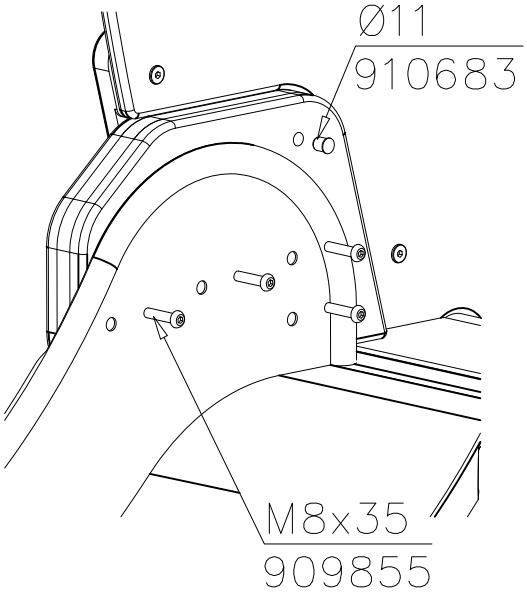

DET 6

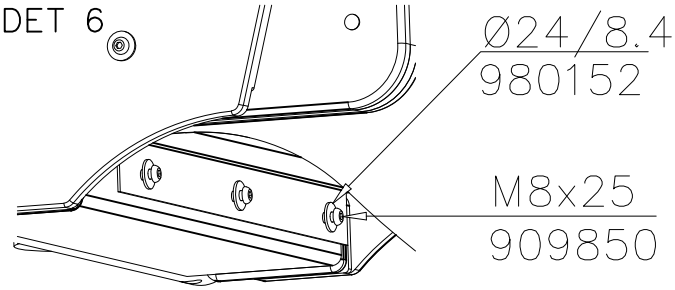

DET 7

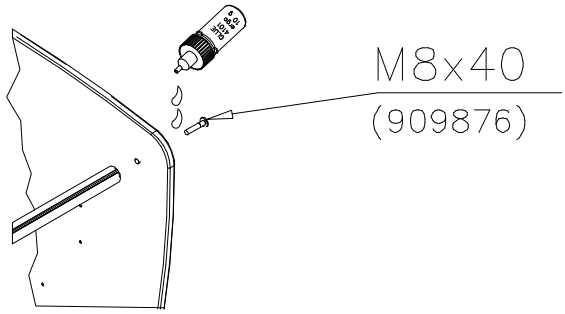

Copyright 1998 Lappset Group Ltd

LAPPSET SLIDE METAL

DEEP FOUNDATION

DATE: 11.2.2019

	PCS		PCS		PCS		PCS
◯ 707133	1	◯ 901868	2	(1) 909210	4	(2) 905051	4
10x80x745		Ø30x598		M8x40		Ø24/8.4	

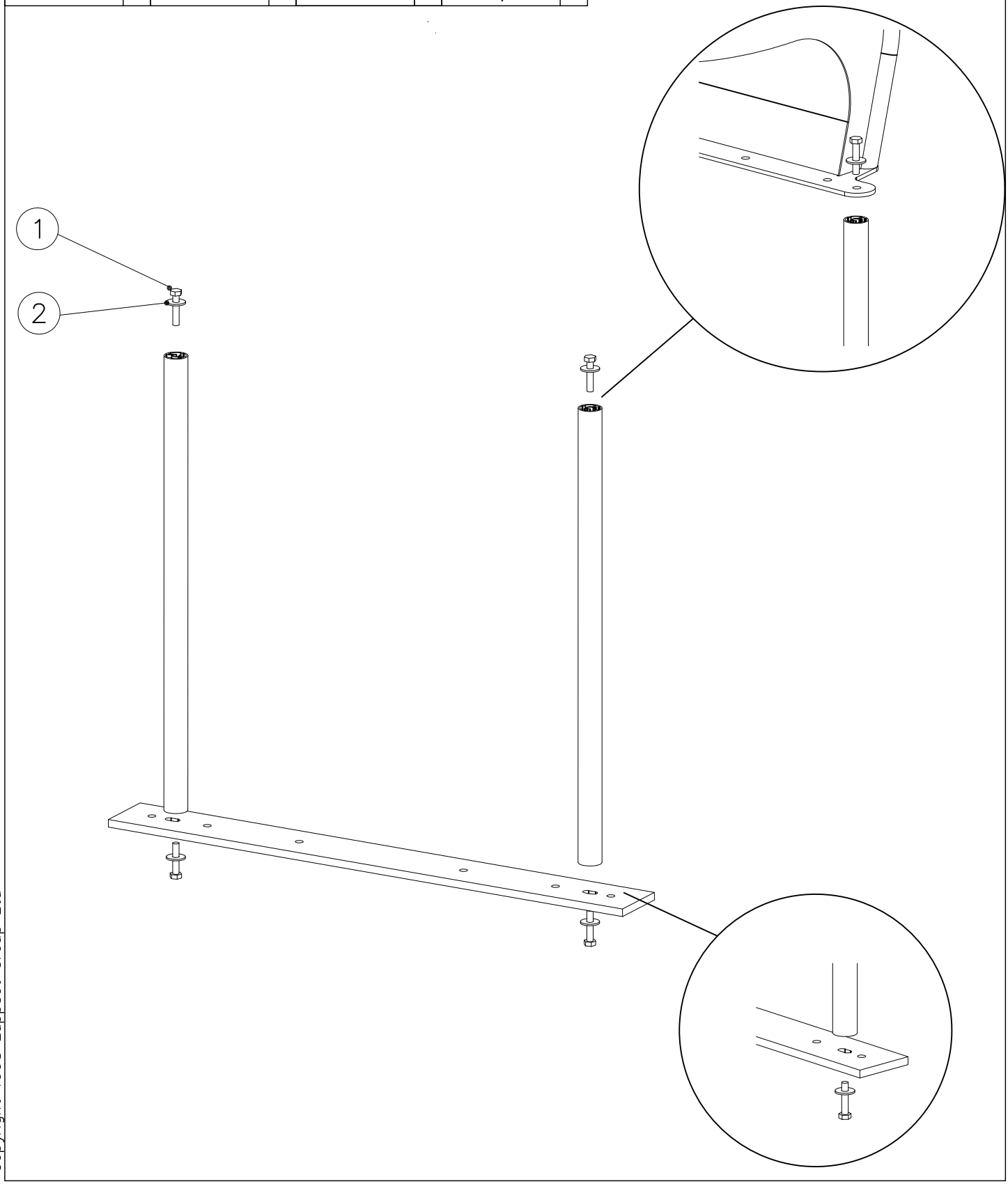

Copyright 1998 Lappset Group Ltd

LAPPSET SLIDE METAL

DEEP FOUNDATION

DATE: 24.11.2020

Floor level +1970

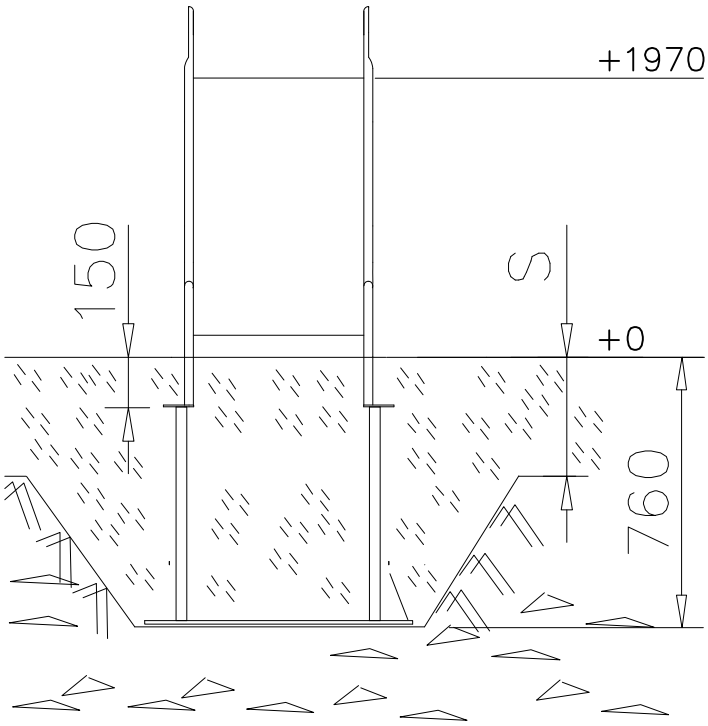

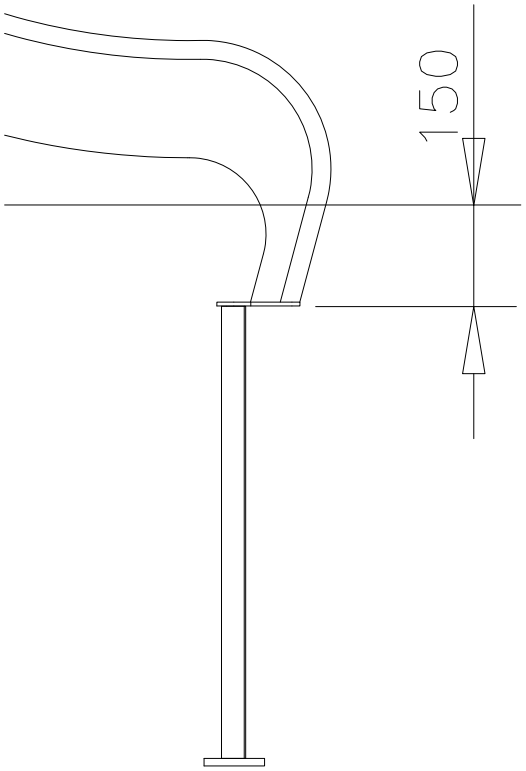

Floor level +870, +1470, +2070

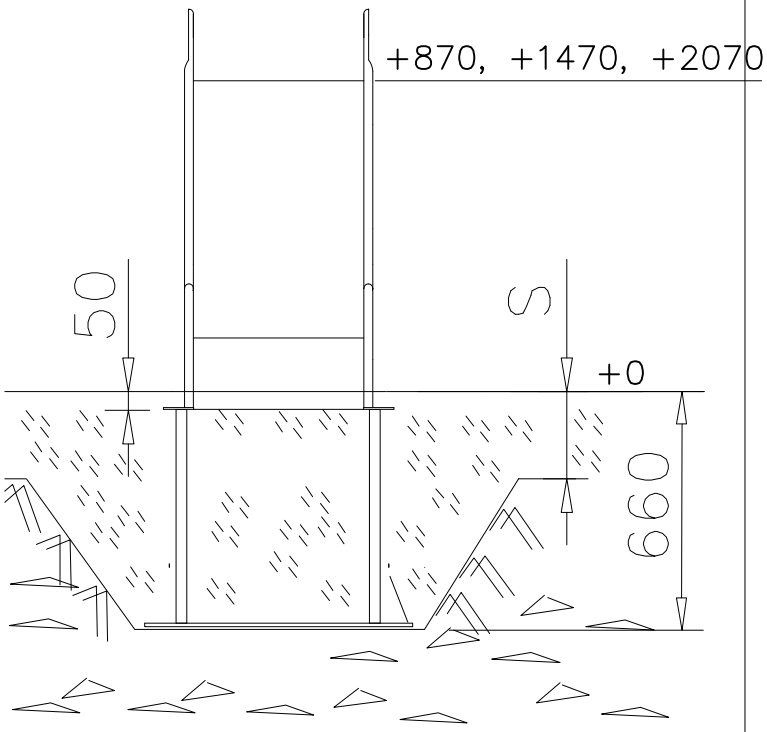

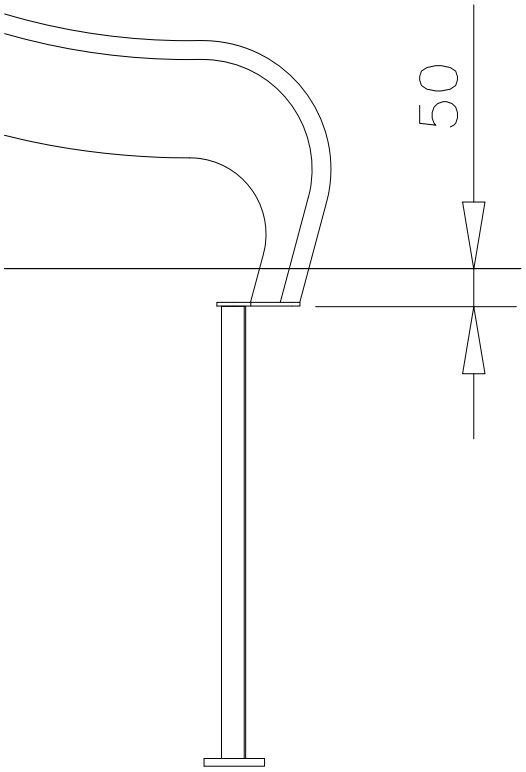

Copyright 1998 Lappset Group Ltd