# LAPPSET®

# FINNO

ASENNUSOHJE
MONTERINGSANSVISNING
INSTALLATION INSTRUCTION
AUFBAUANLEITUNG
NOTICE D'INSTALLATION

REF: 122460
DATE: 15.6.2005

# 122460

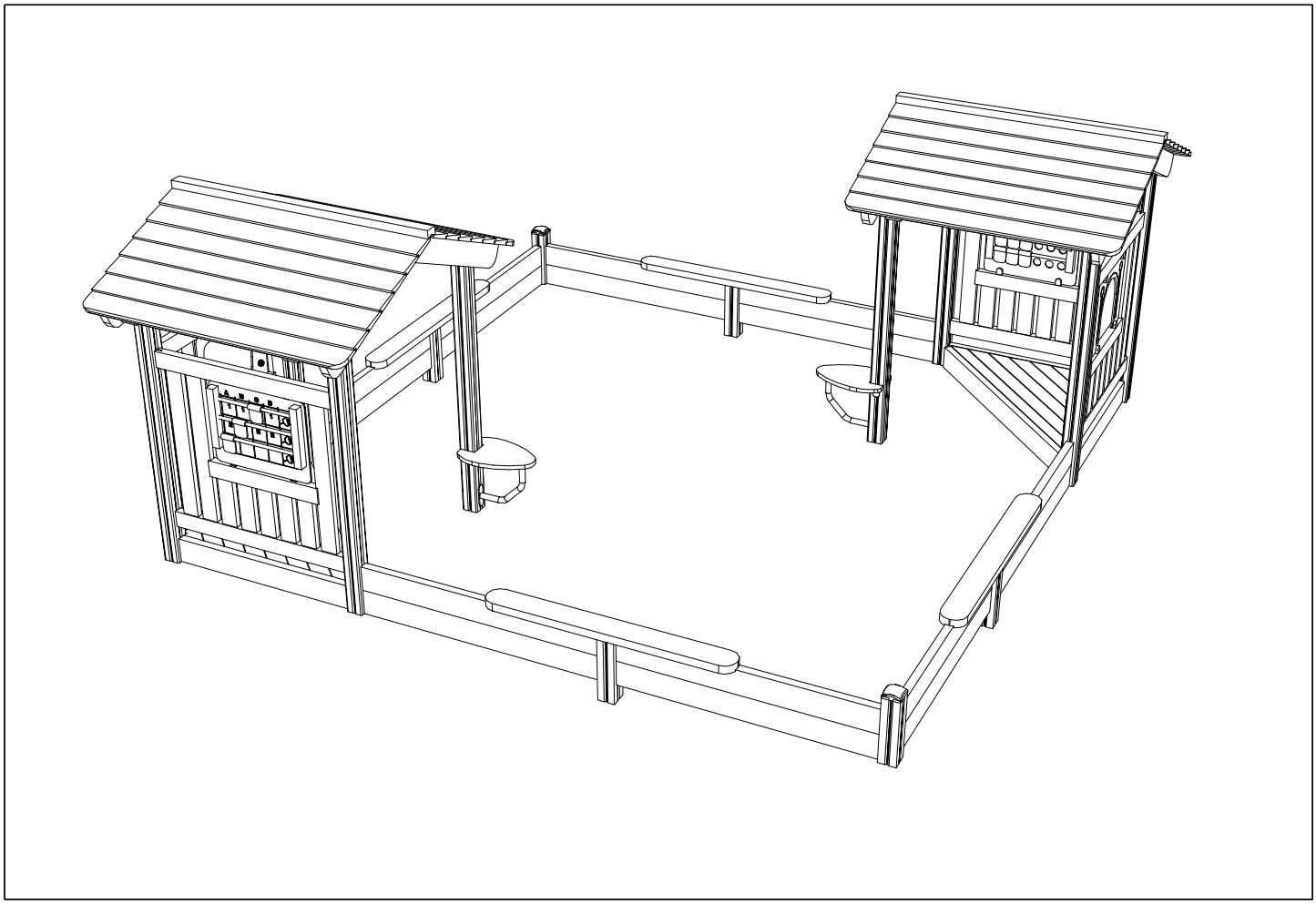

Copyright Lappset Group Ltd

# LAPPSET®

**FINNO**

# 122460

**REF:** 122460
**DATE:** 15.6.2005



| | | | | | | | | | | | |
|---|---|---|---|---|---|---|---|---|---|---|---|
| 002781 | PCS | 003700 | PCS | 003886 | PCS | 003932 | PCS | 003942 | PCS | 003990 | PCS |
| 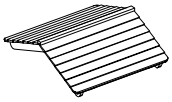 | 2 | 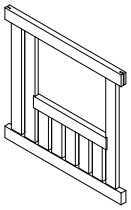 | 4 | 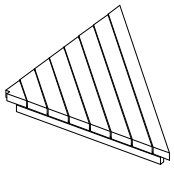 | 2 | 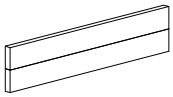 L 1404 | 8 | 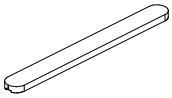 L 1400 | 4 | 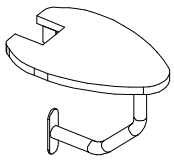 | 2 |
| 005273 | PCS | 005274 | PCS | 005277 | PCS | 005281 | PCS | 005610 | PCS | 005692 | PCS |
| 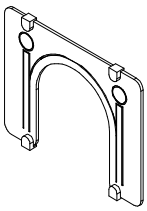 | 1 | 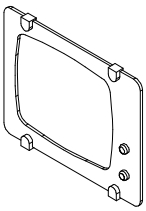 | 1 | 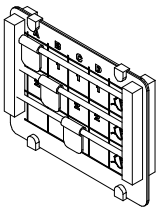 | 1 | 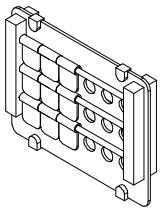 | 1 | 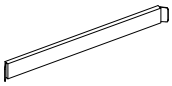 | 2 | 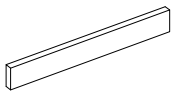 L 1104 | 4 |
| 005735 | PCS | 006822 | PCS | 905051 | PCS | 905066 | PCS | 905120 | PCS | 905138 | PCS |
| 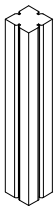 L 600 | 6 | L 2250 | 8 | Ø24/8.4 | 60 | S30H | 12 | Ø14 | 32 | 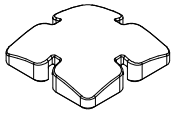 GREY | 2 |
| 905196 | PCS | 909238 | PCS | 980131 | PCS | 909217 | PCS | | PCS | | PCS |
| 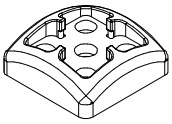 GREY | 2 | 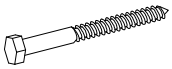 8x90 | 56 | 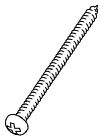 6x60 | 8 | 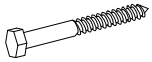 8x70 | 4 | | | | |
| | PCS | | PCS | | PCS | | PCS | | PCS | | PCS |
| | PCS | | PCS | | PCS | | PCS | | PCS | | PCS |
| | PCS | | PCS | | PCS | | PCS | | PCS | | PCS |

Copyright Lappset Group Ltd

**LAPPSET®**
**FINNO**

# 122460

REF: 122460
DATE: 15.6.2005



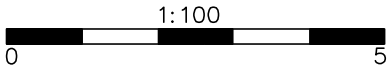


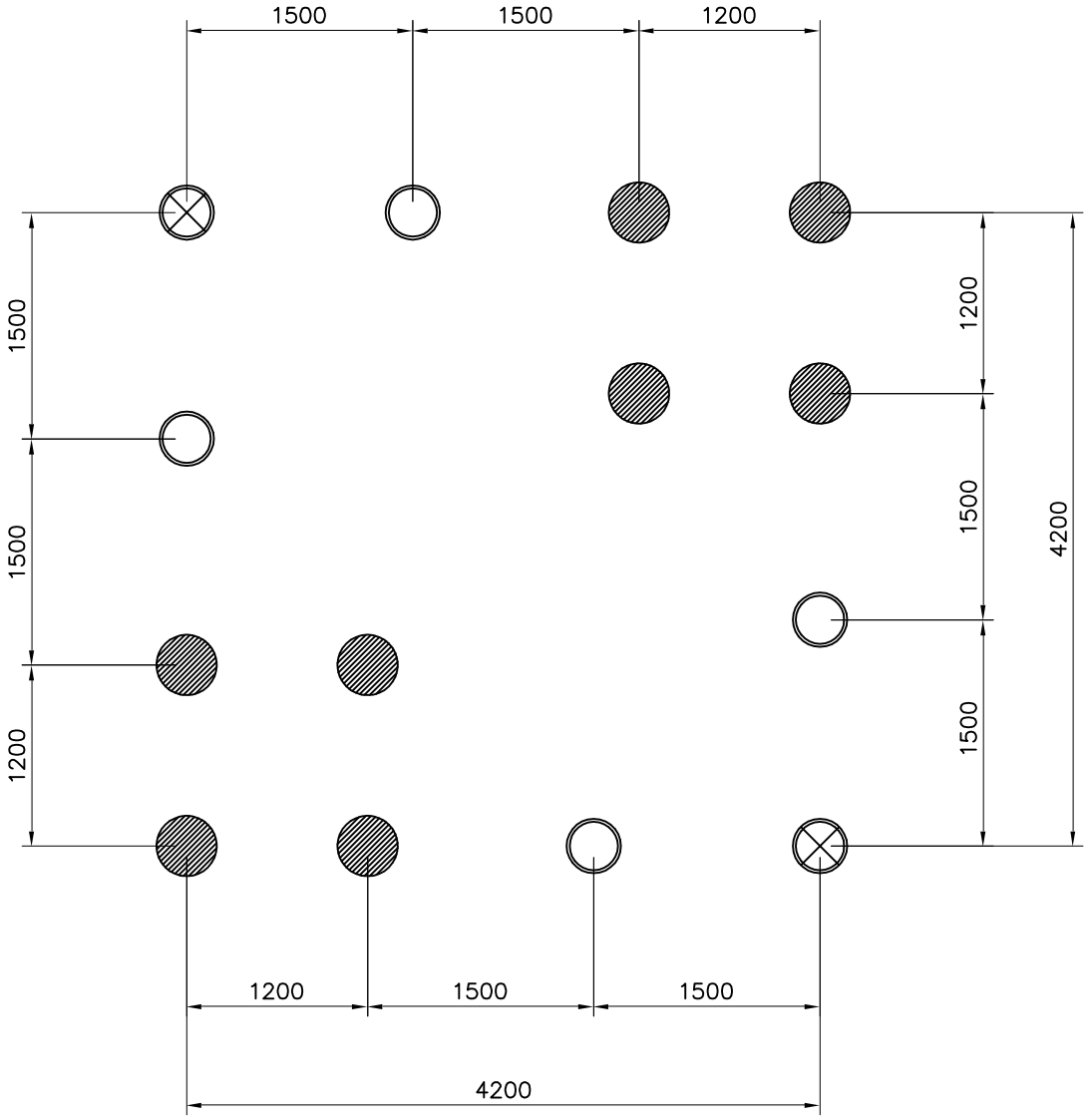


Copyright Lappset Group Ltd

**LAPPSET®**
**FINNO**

# 122460

REF: 122460
DATE: 15.6.2005



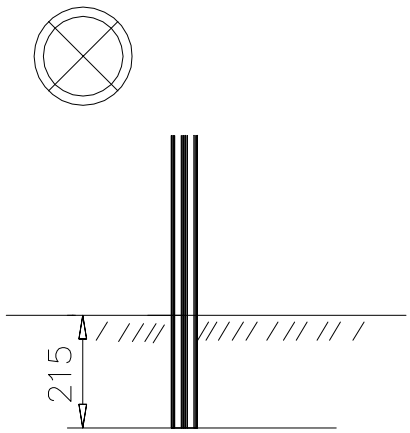


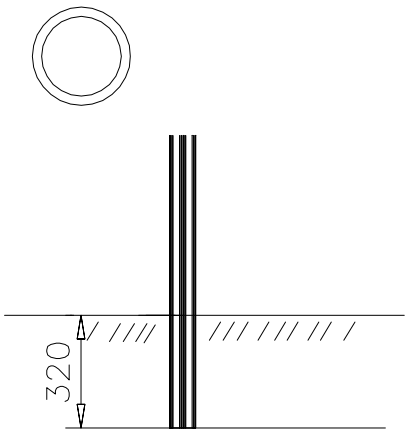


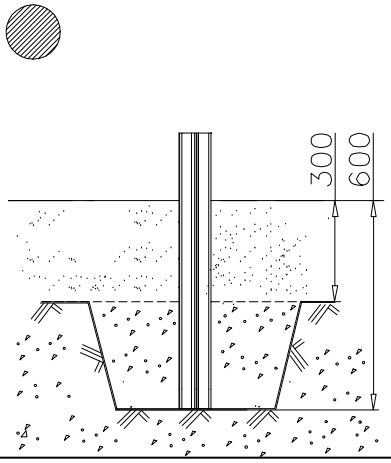


Copyright Lappset Group Ltd

**LAPPSET®**
**FINNO**

# 122460

REF: 122460
DATE: 15.6.2005

**5A**

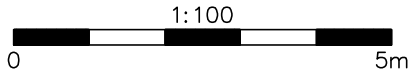


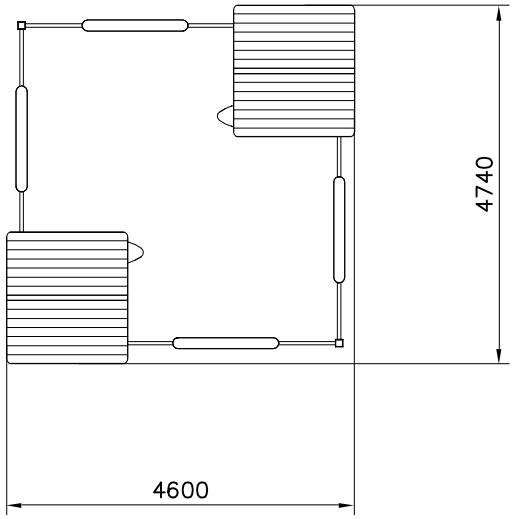


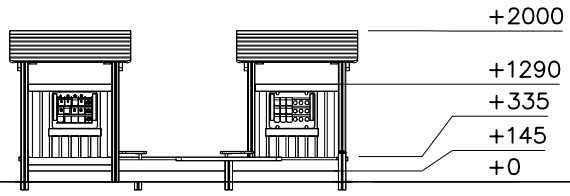


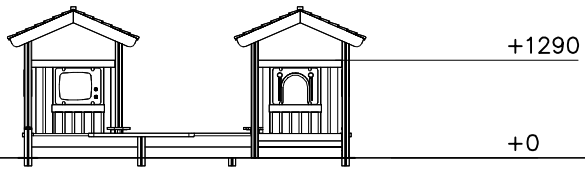


Copyright Lappset Group Ltd

**LAPPSET®**
**FINNO**

# 122460

REF: 122460
DATE: 15.6.2005



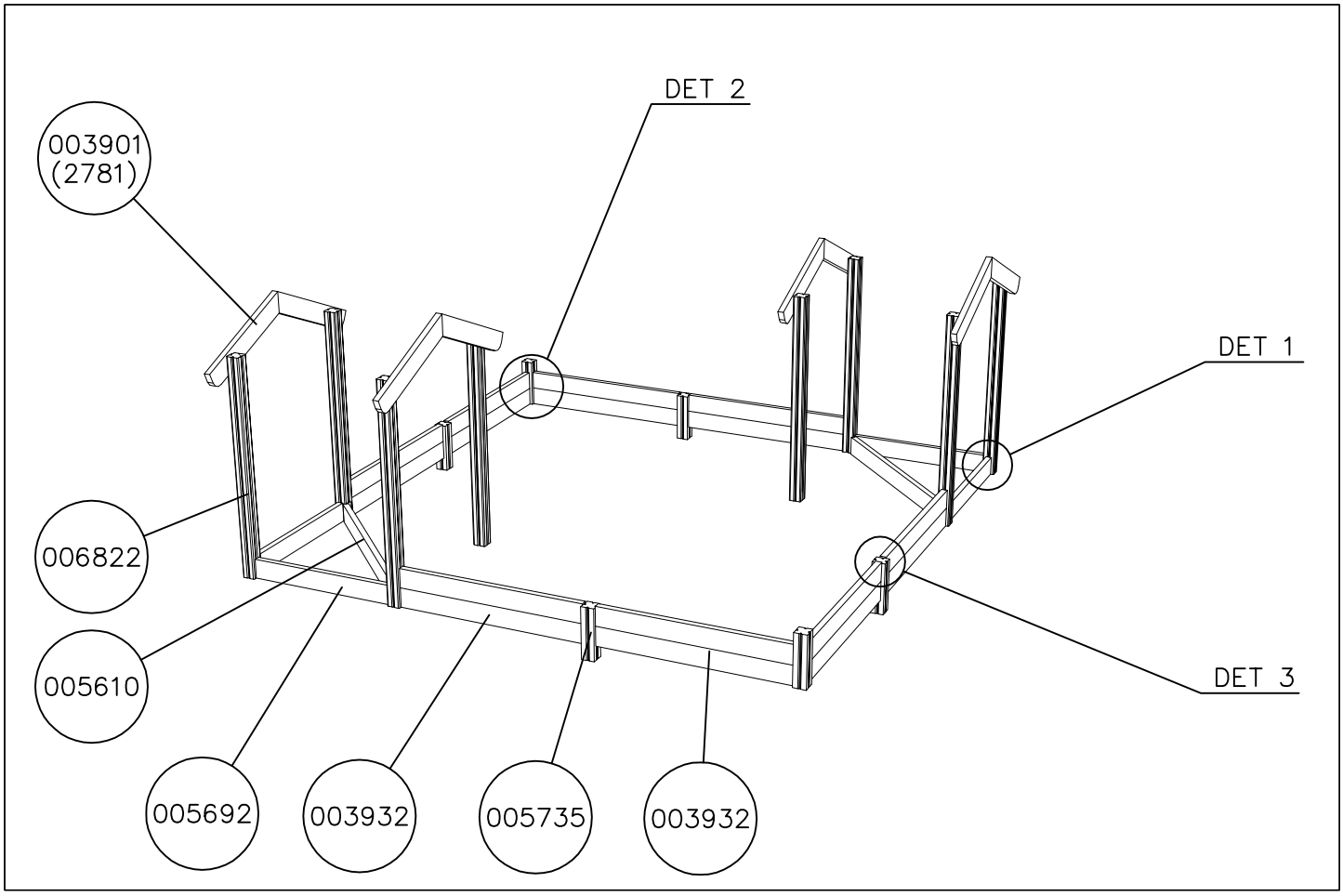


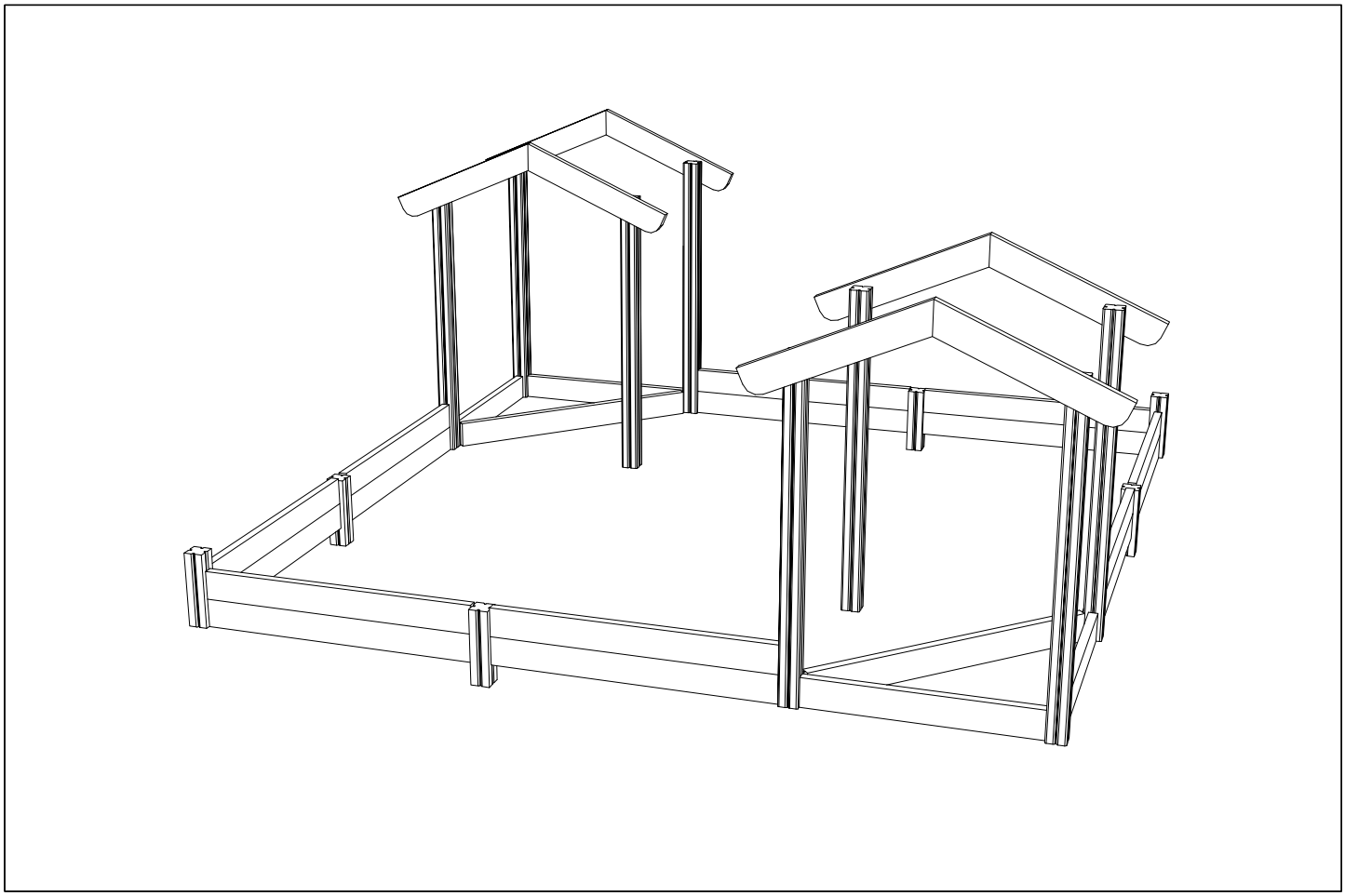

Copyright Lappset Group Ltd

**LAPPSET®**
**FINNO**

# 122460

REF: 122460
DATE: 15.6.2005



DET 1

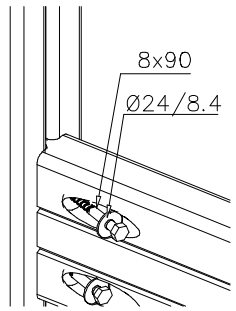


DET 2

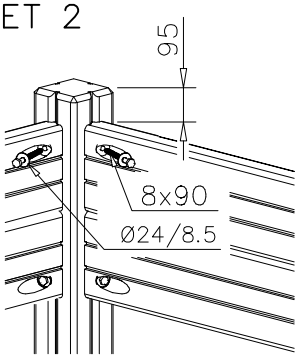


DET 3

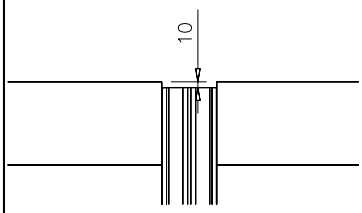


DET 4

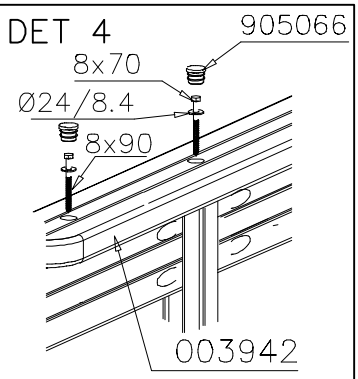


DET 5

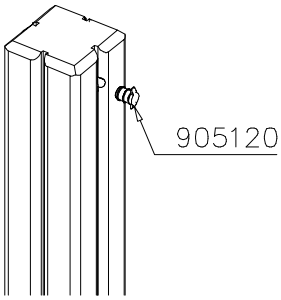


DET 6

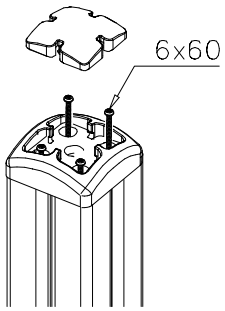


Copyright Lappset Group Ltd

**LAPPSET®**

**FINNO**

# 122460

REF: 122460
DATE: 15.6.2005



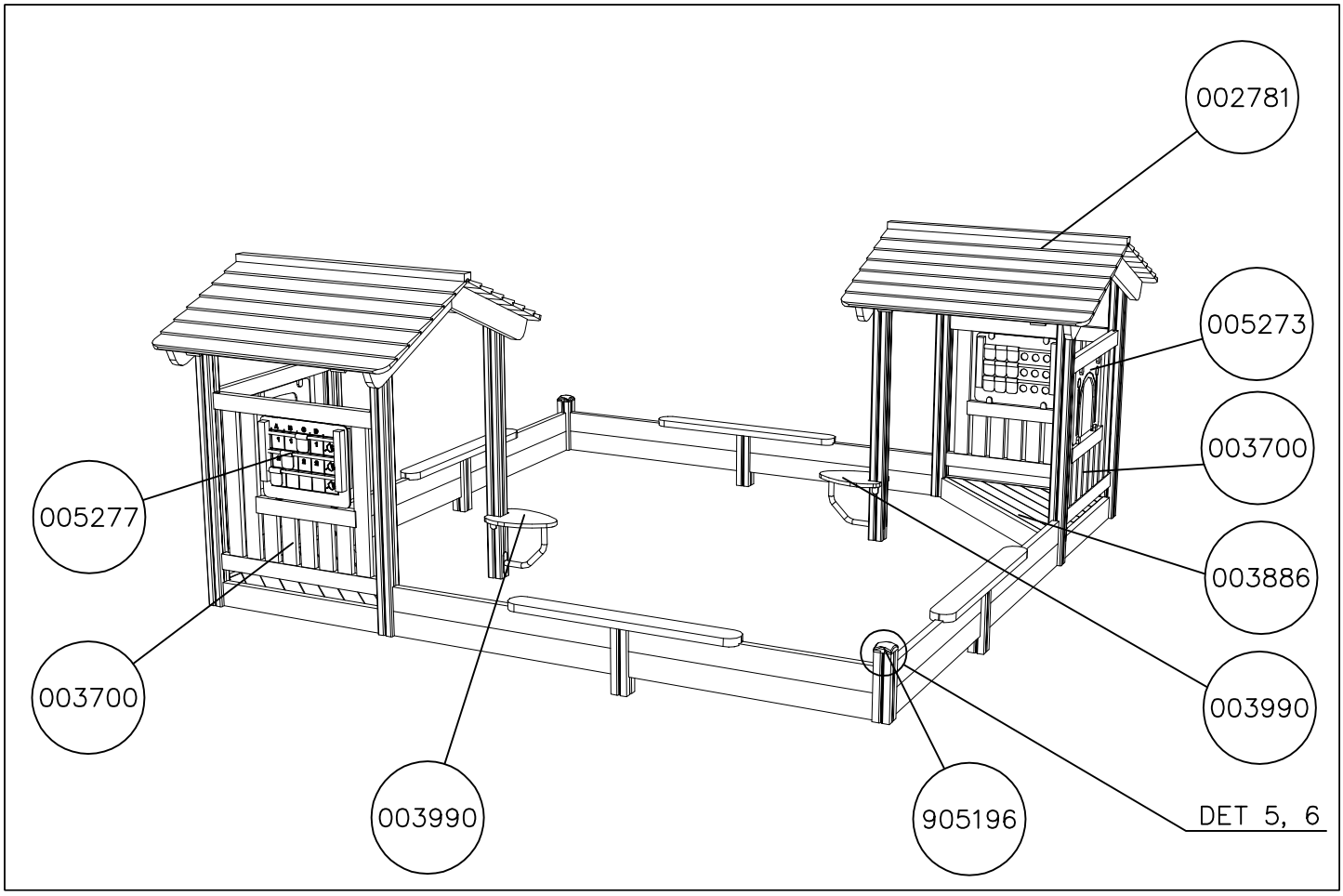


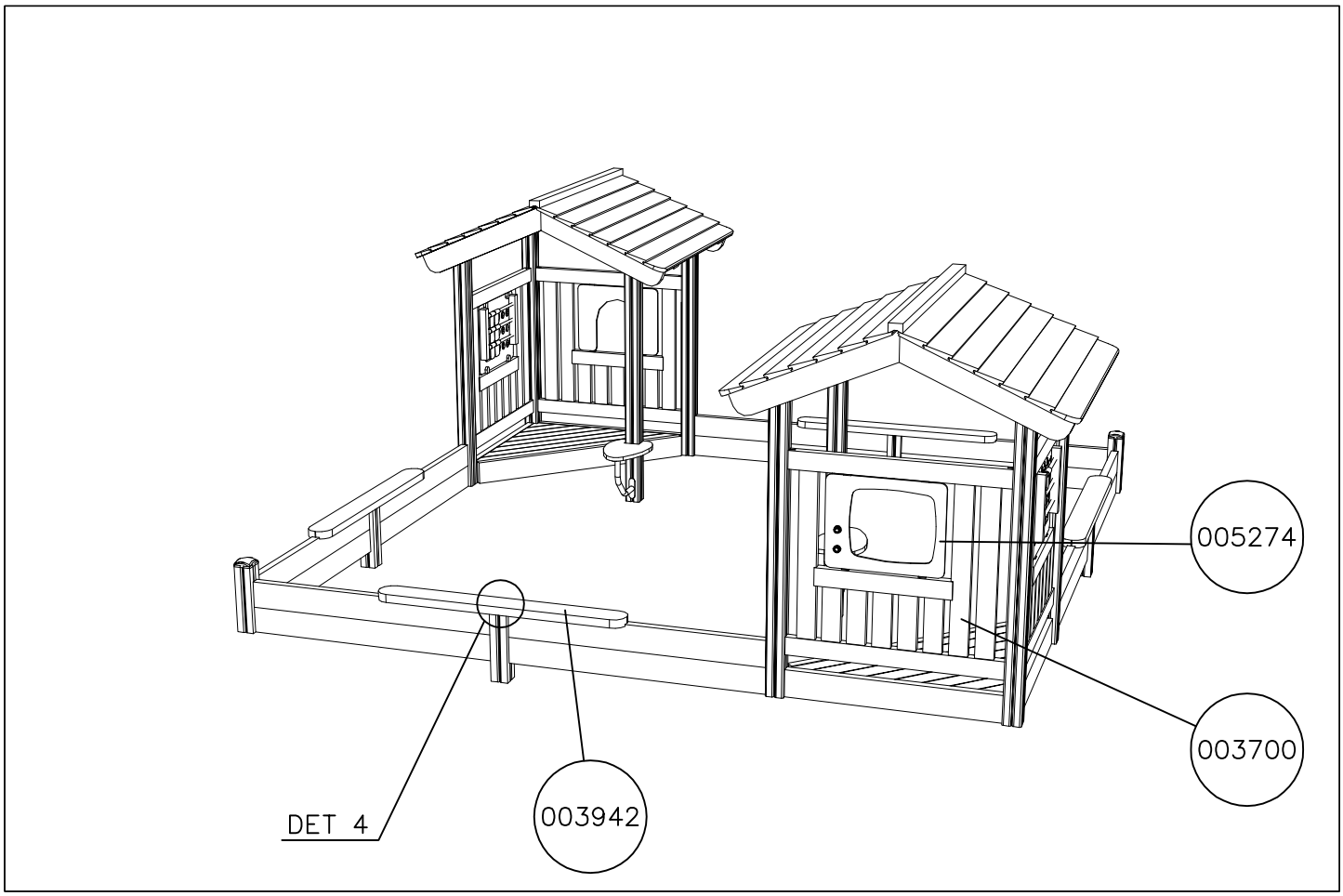


Copyright Lappset Group Ltd