LAPPSET®

DASH PARKOUR

ASENNUSOHJE
MONTERINGSANSVISNING
INSTALLATION INSTRUCTION
AUFBAUANLEITUNG
NOTICE D'INSTALLATION

DATE: 7.11.2019

081765M

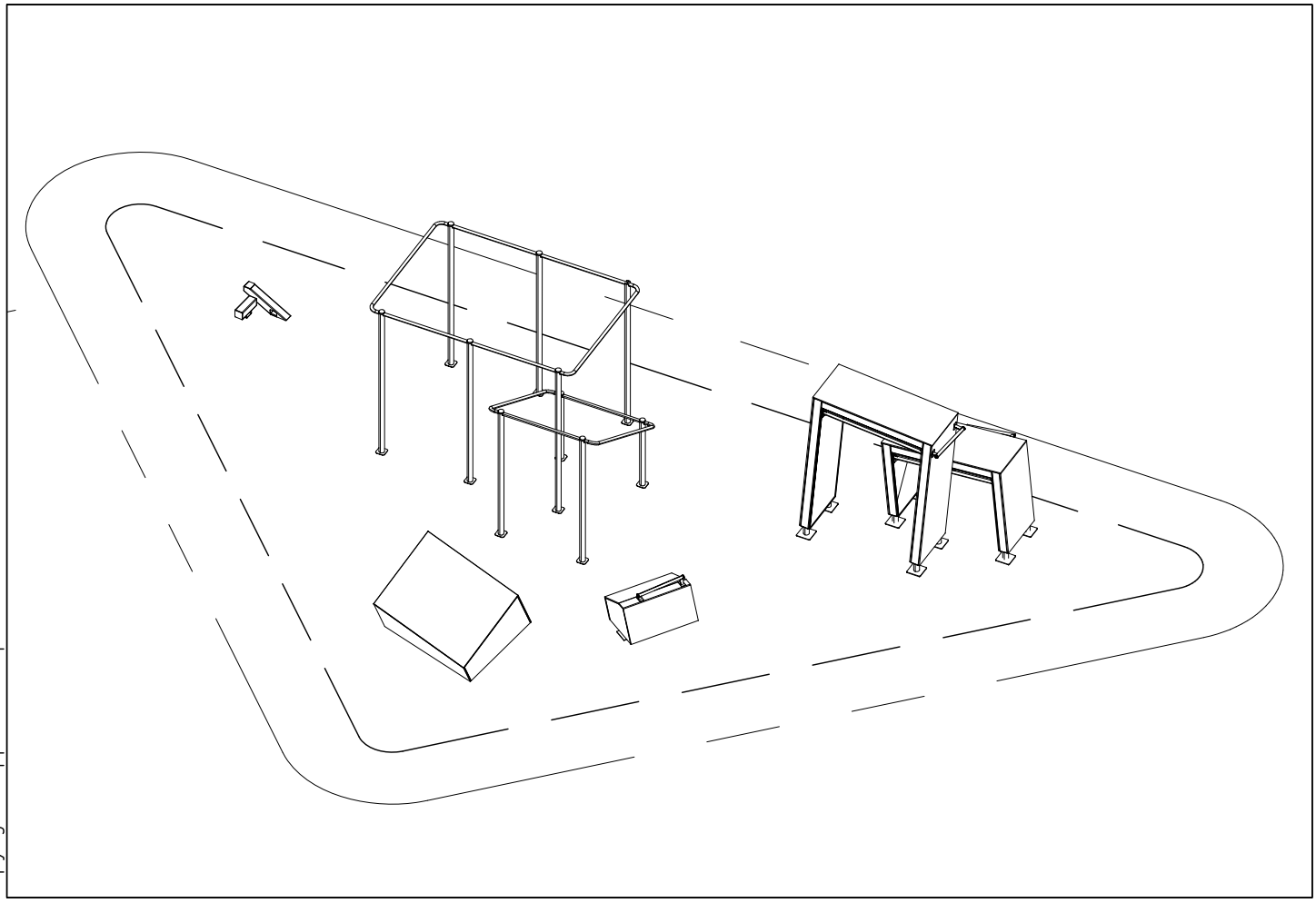

Copyright Lappset Group Ltd

LAPPSET®

DASH PARKOUR

081765M

3

DATE: 7.11.2019

081701M	PCS	081702M	PCS	081737M	PCS	081741M	PCS	081750M	PCS		PCS
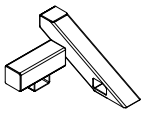	1	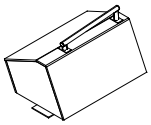	1	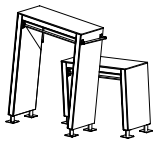	1	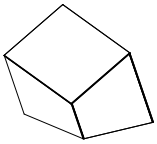	1	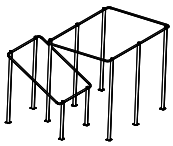	1		
	PCS		PCS		PCS		PCS		PCS		PCS
	PCS		PCS		PCS		PCS		PCS		PCS
	PCS		PCS		PCS		PCS		PCS		PCS
	PCS		PCS		PCS		PCS		PCS		PCS
	PCS		PCS		PCS		PCS		PCS		PCS
	PCS		PCS		PCS		PCS		PCS		PCS

Copyright Lappset Group Ltd

LAPPSET®

DASH PARKOUR

081765M

DATE: 7.11.2019

4

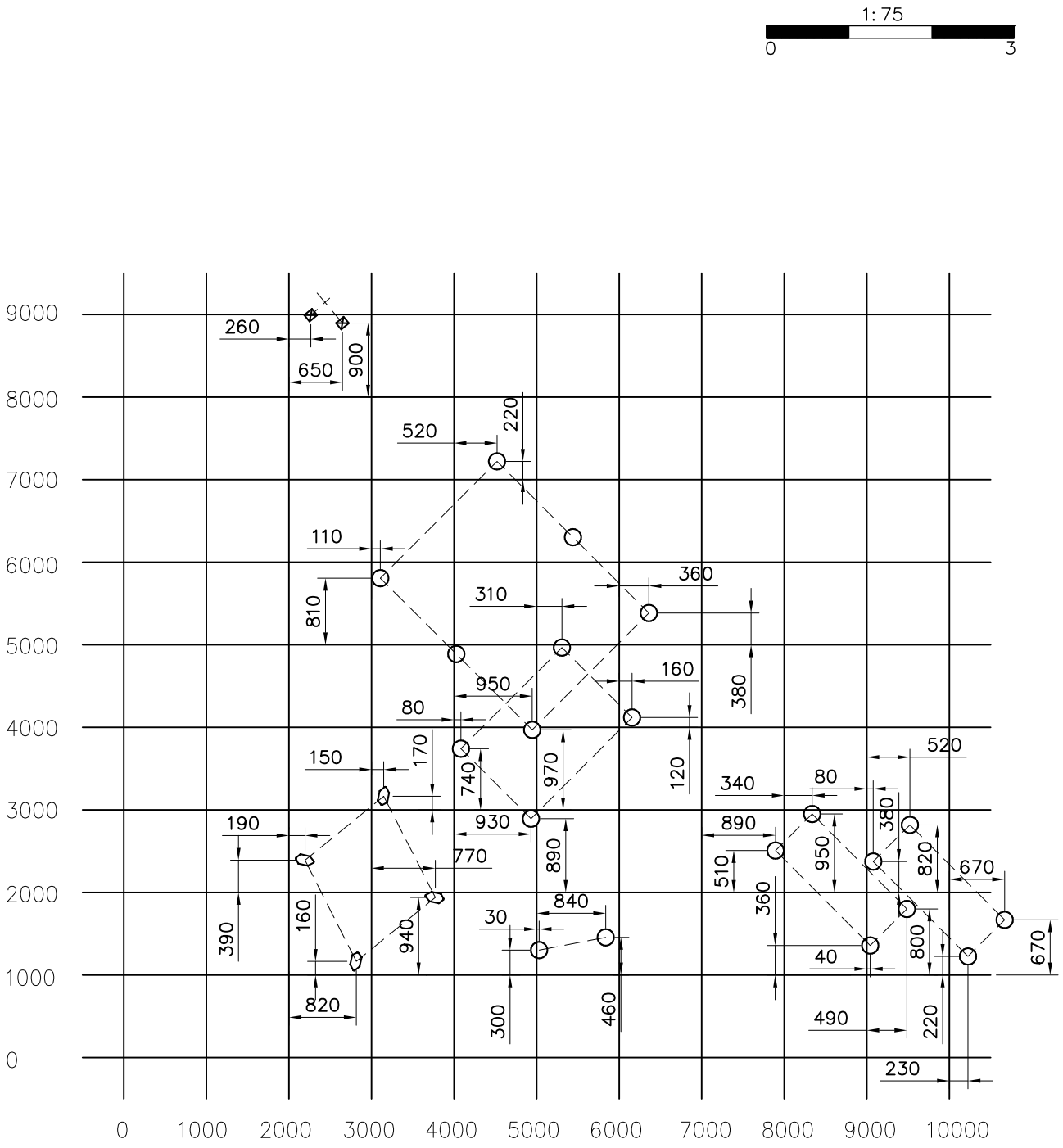

Copyright Lappset Group Ltd

LAPPSET®

DASH PARKOUR

081765M

DATE: 7.11.2019

4b

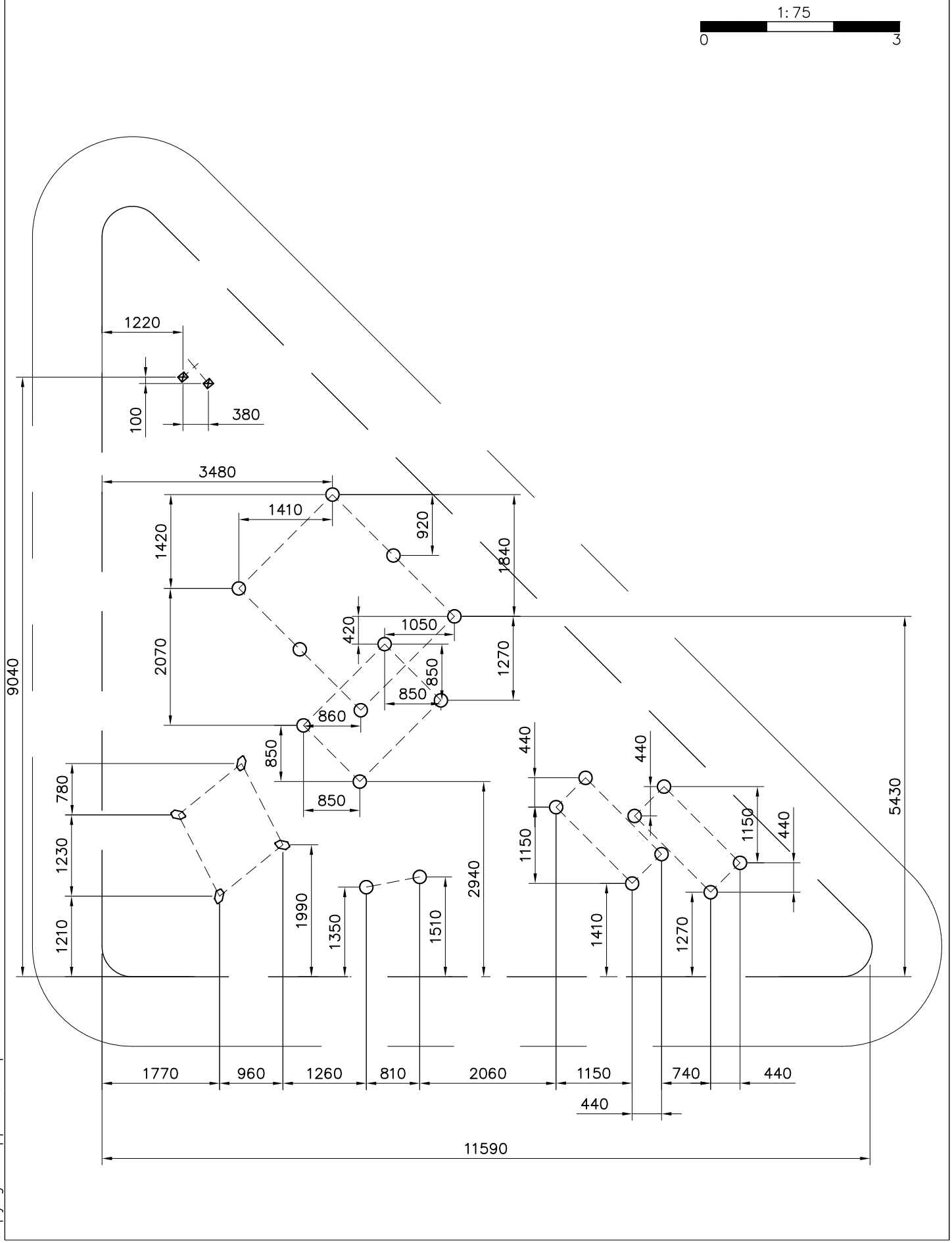

Copyright Lappset Group Ltd

LAPPSET®

DASH PARKOUR

081765M

DATE: 7.11.2019

4c

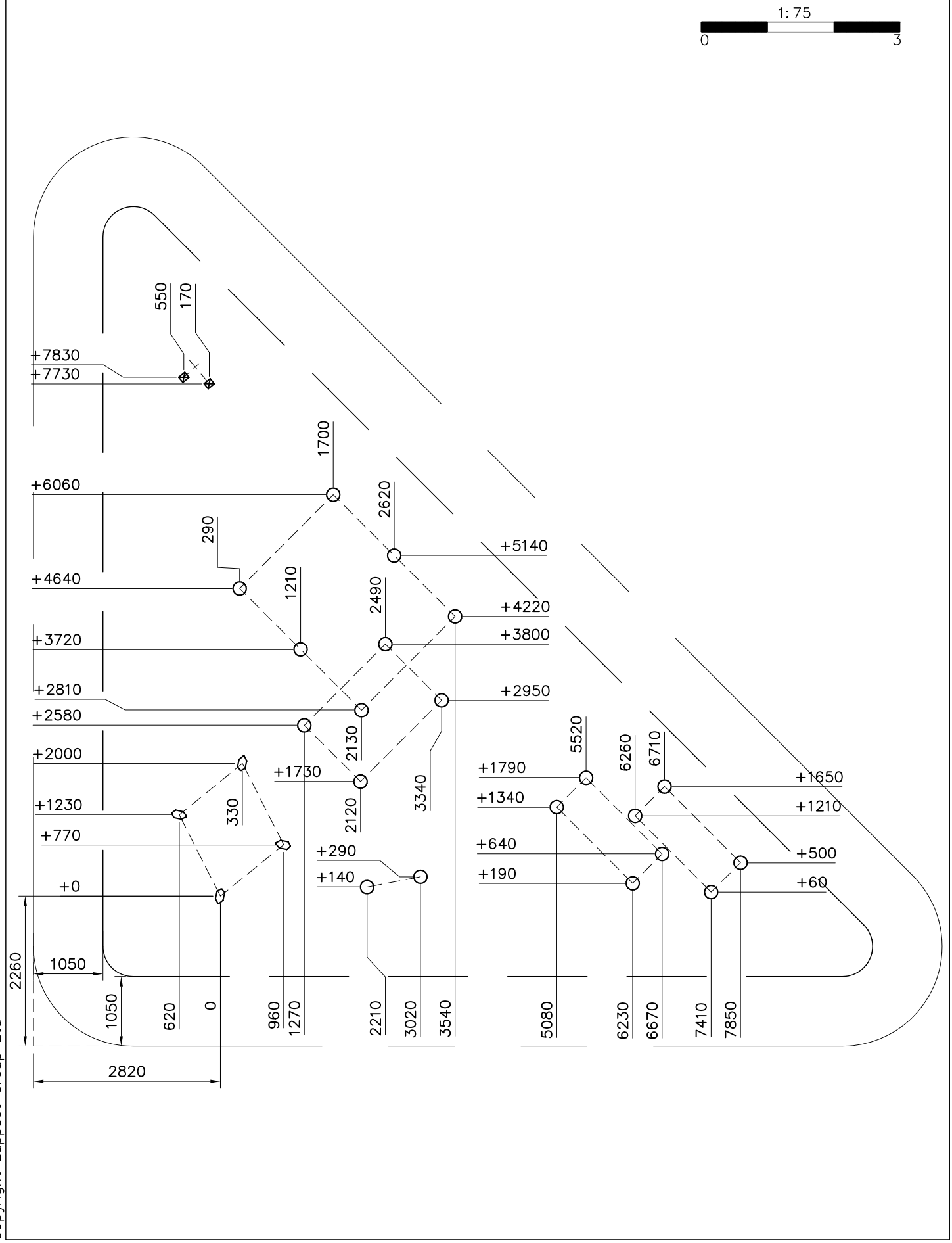

Copyright Lappset Group Ltd

LAPPSET®

DASH PARKOUR

081765M

DATE: 7.11.2019

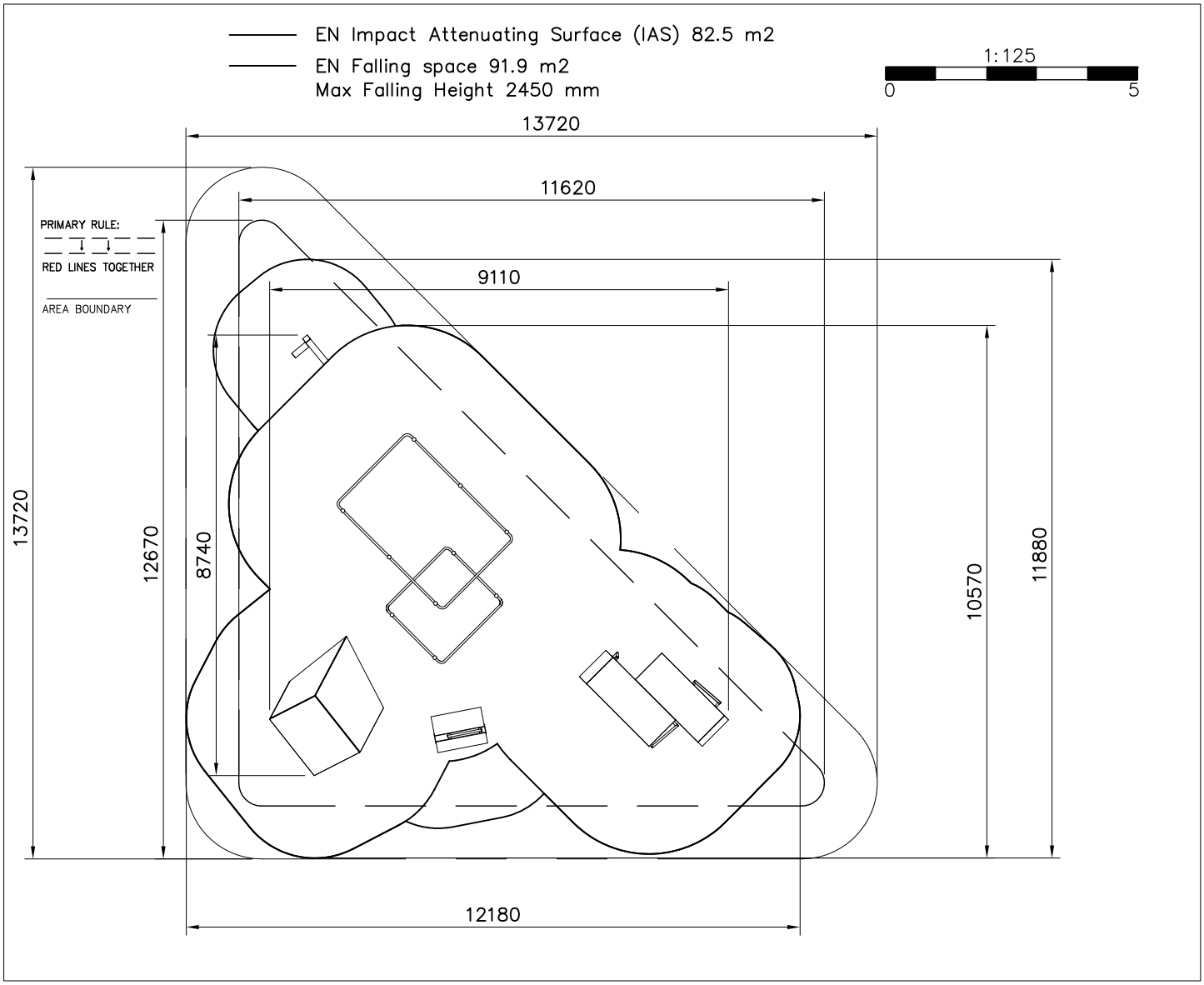

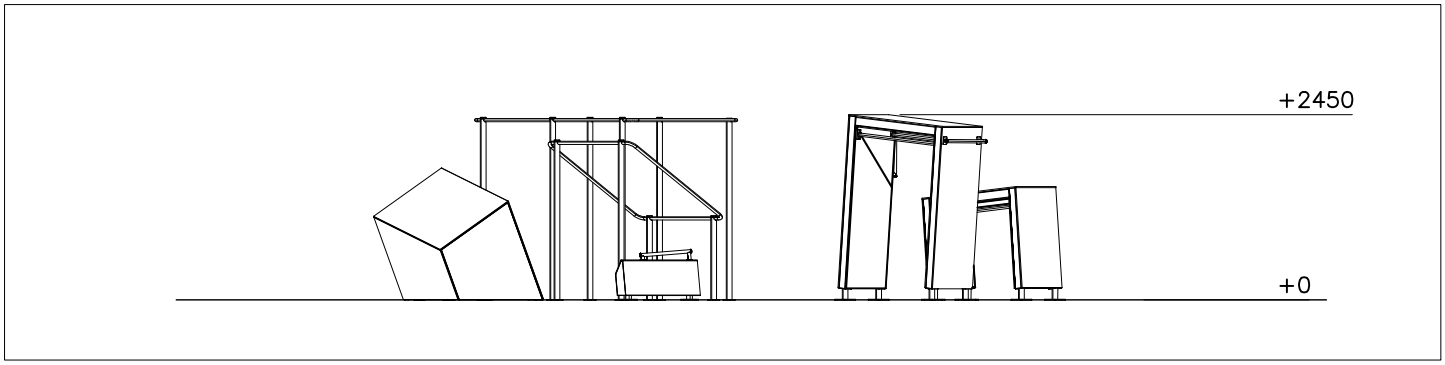

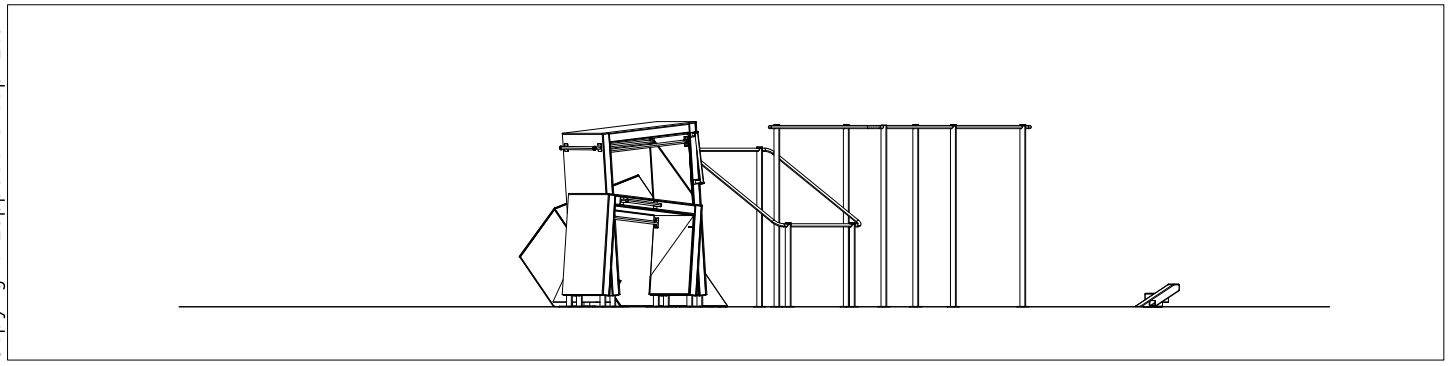

Copyright Lappset Group Ltd

LAPPSET®

DASH PARKOUR

081765M

DATE: 7.11.2019

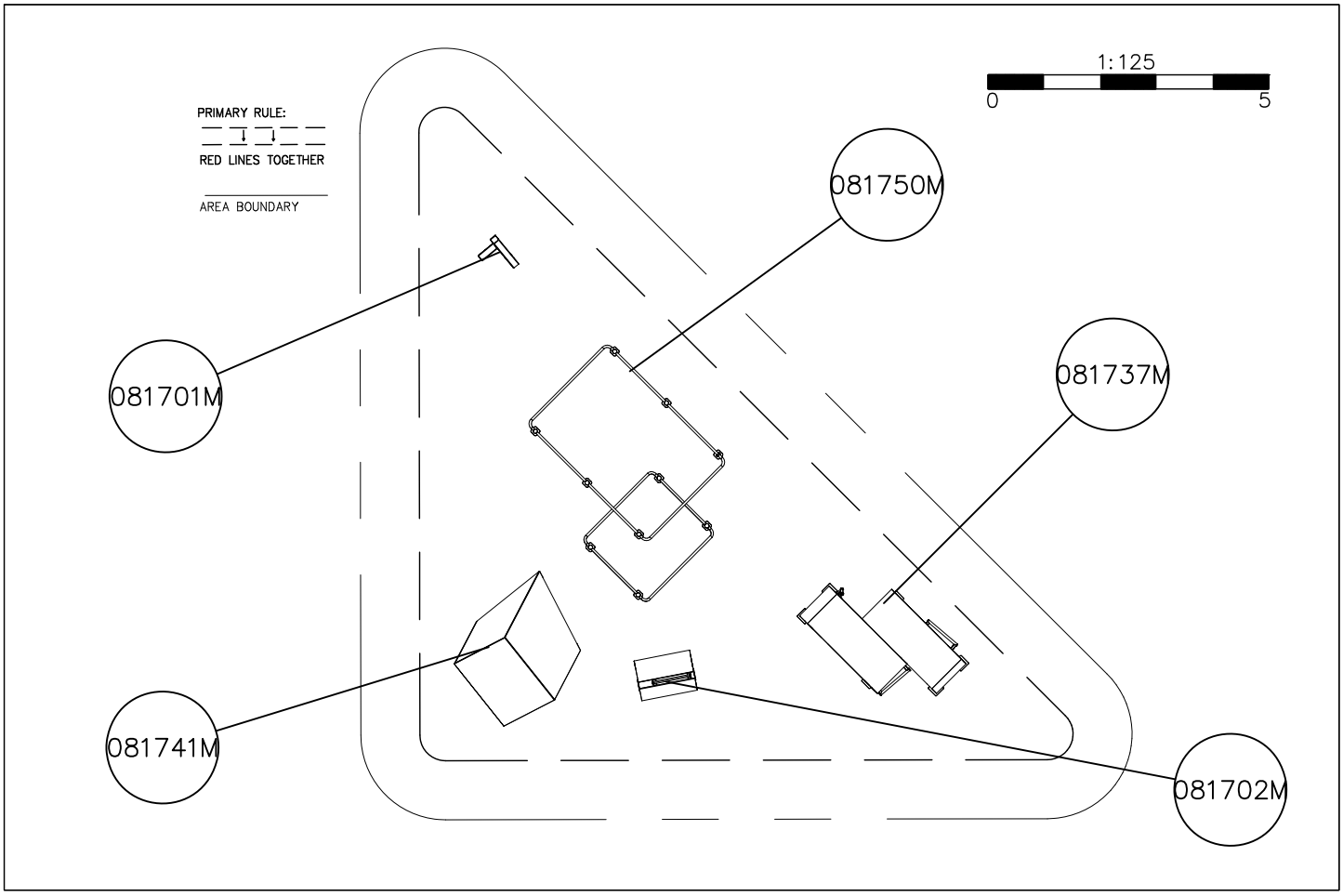

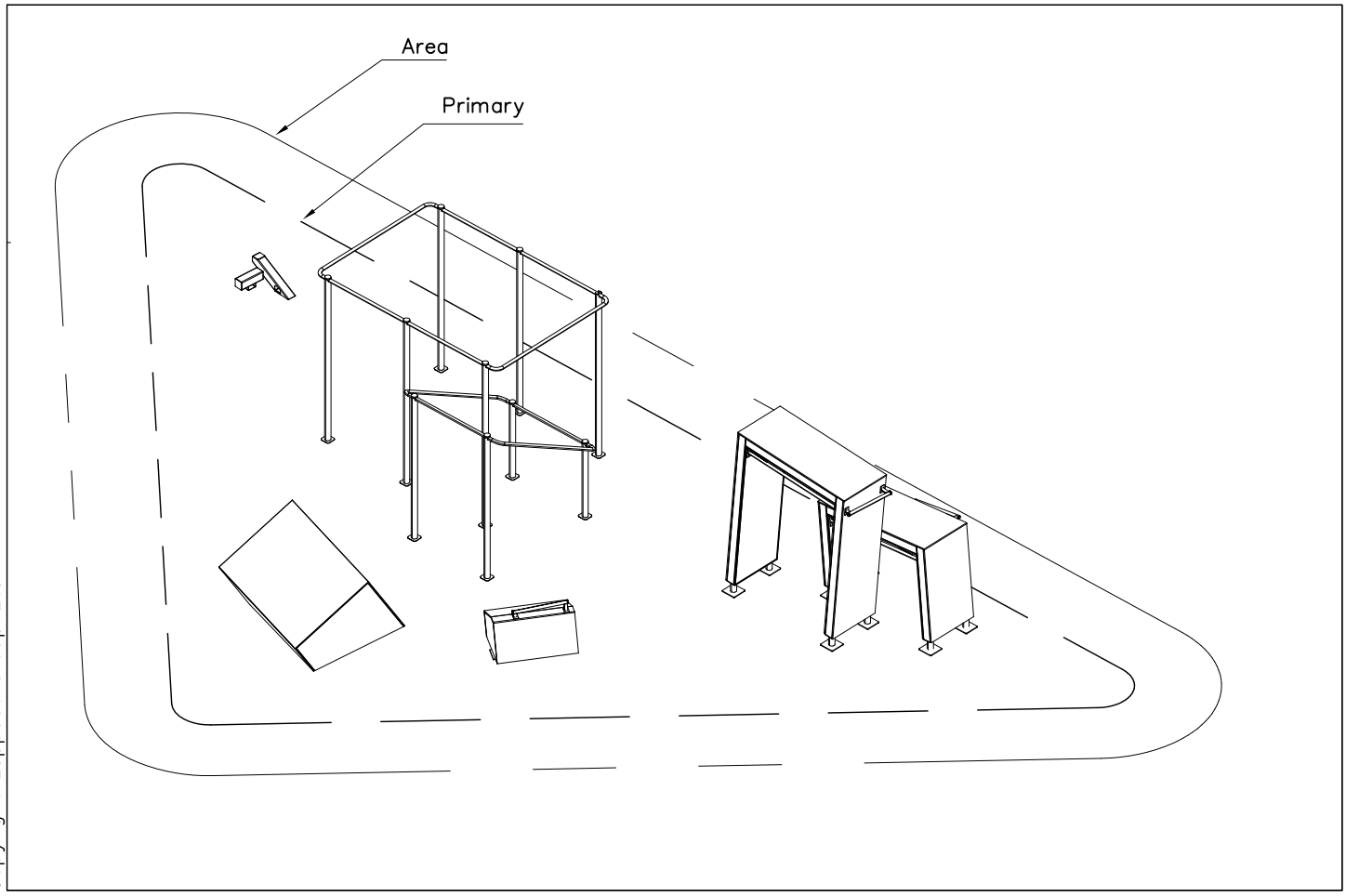

Copyright Lappset Group Ltd

LAPPSET®

081765M

DASH PARKOUR

DATE: 7.11.2019

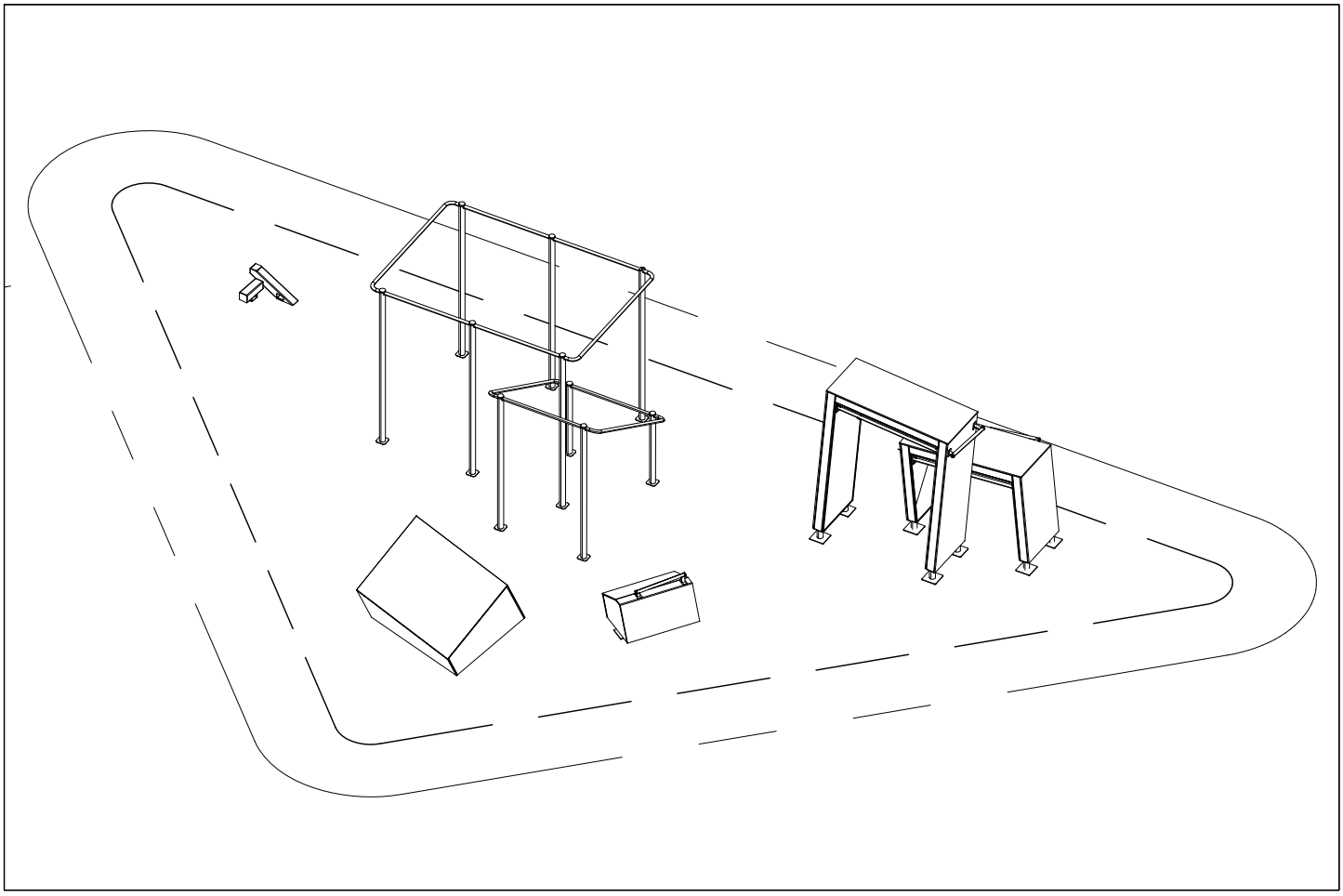

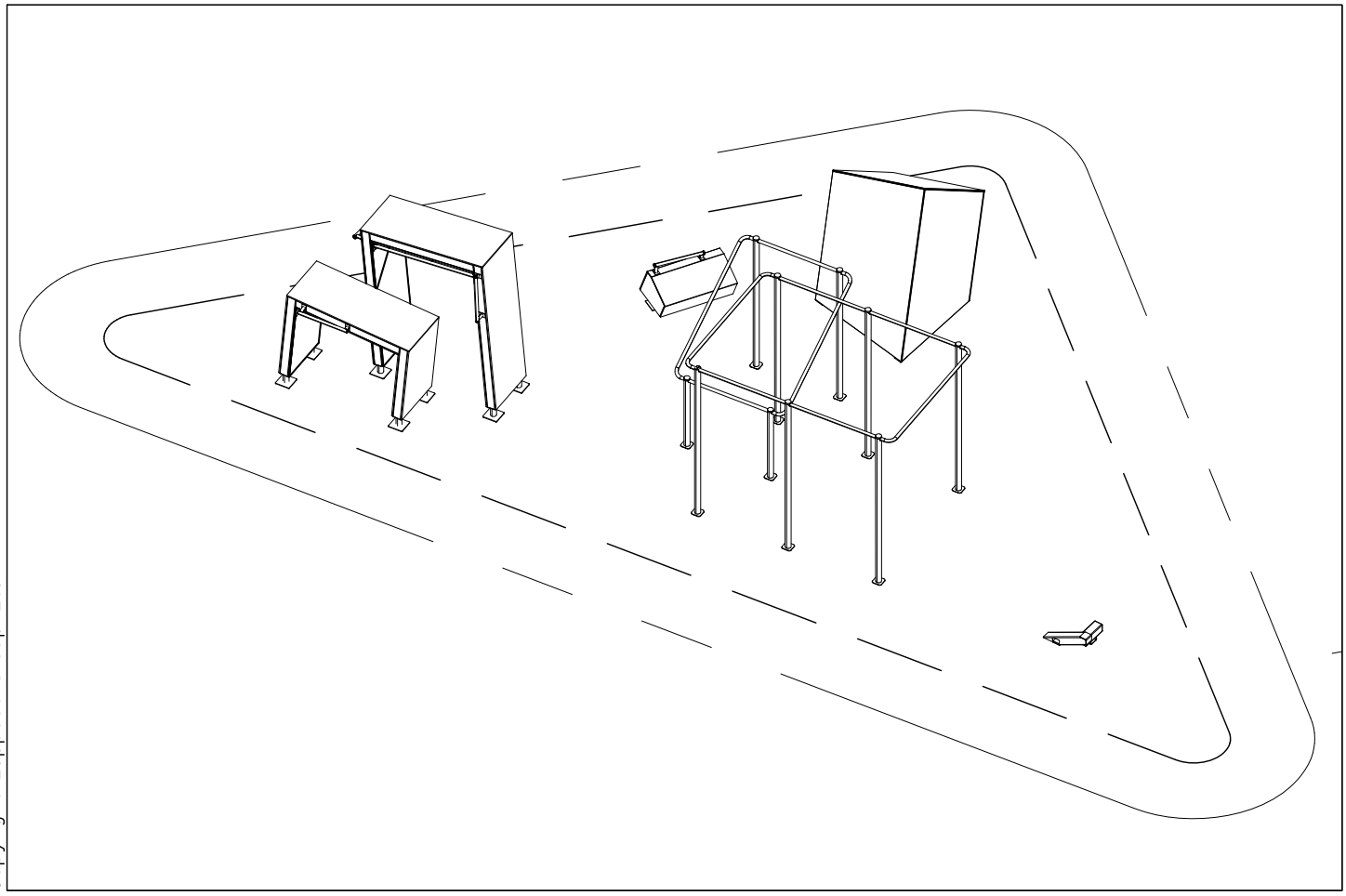

Copyright Lappset Group Ltd

LAPPSET®

081701M

DATE: 9.8.2019

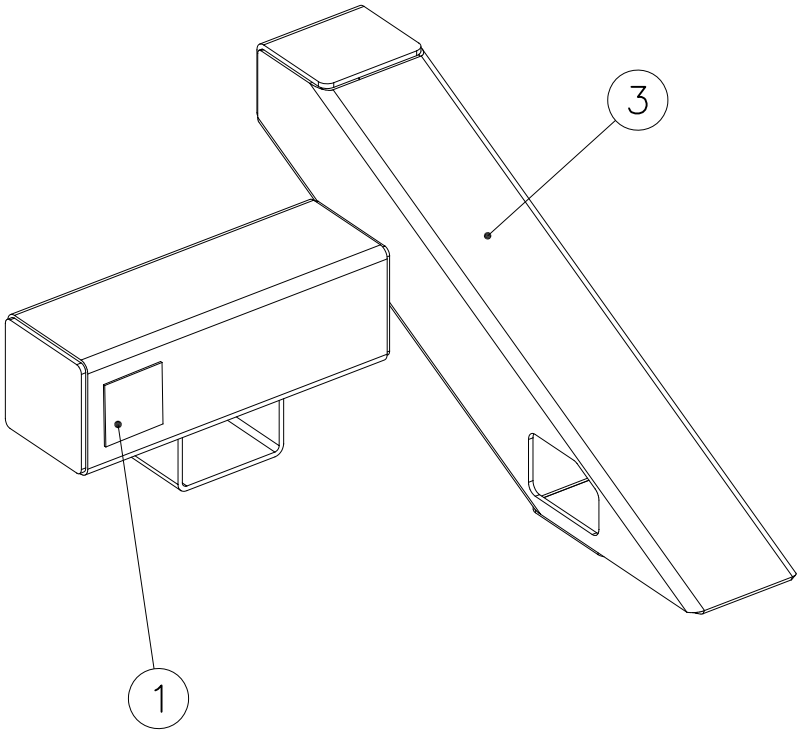

		PCS
1 702341	90x50	1
2 709381	SURFACE	2
3 910220	300x470x662	1

FOOT OPTION FOR DEEP MOUNTING

		PCS
709379+ 902564	L 550	2

1:50

0 2

---- Falling Space 10.8 m2

Max Falling Height 300 mm

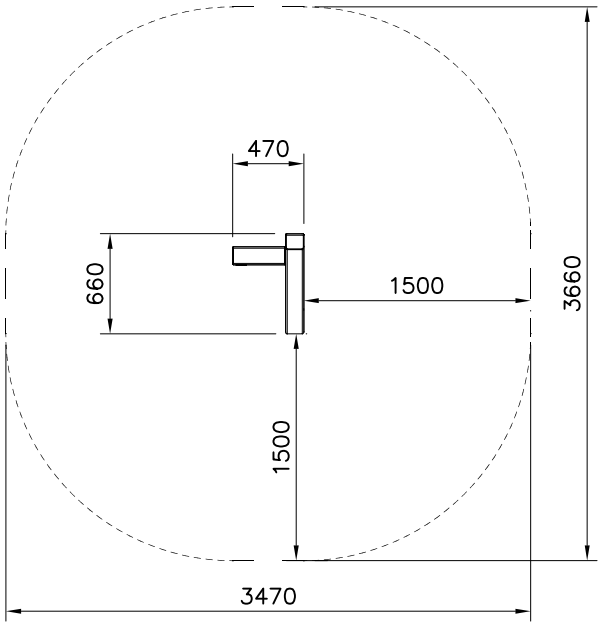

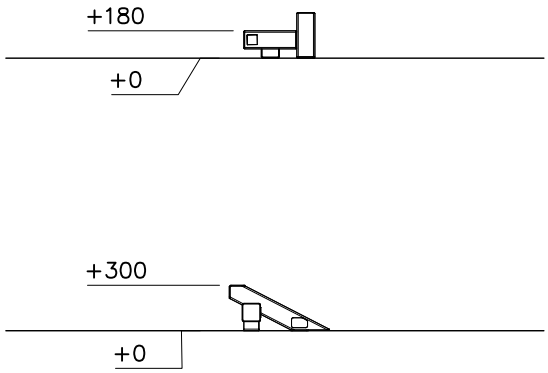

Copyright Lappset Group Ltd

LAPPSET®

081702M

DATE: 12.8.2019

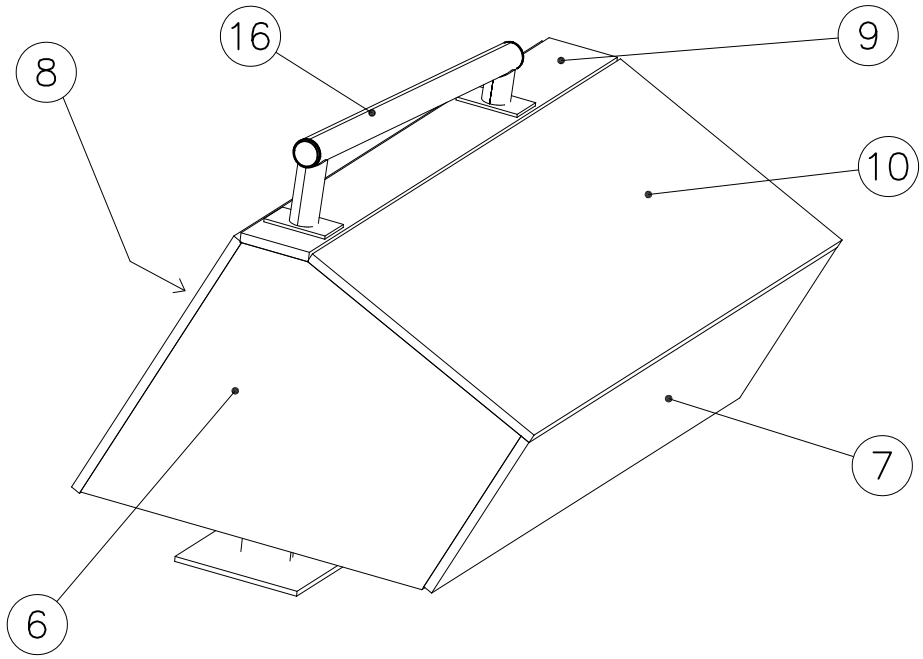

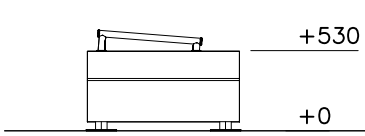

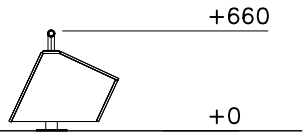

DET 1

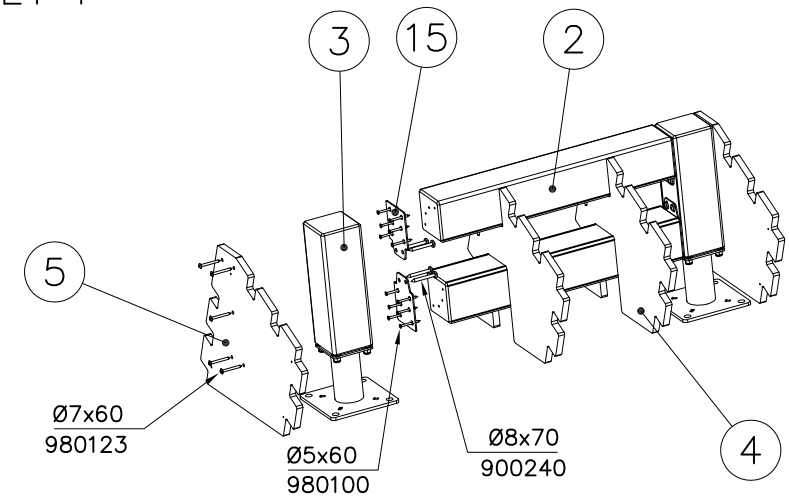

1	702341	PCS	2	708109	PCS	3	708443	PCS	4	708848	PCS	5	708849	PCS	6	708850	PCS
		1			2			2			2			2			2
	90x50			118x118x697			118x118x352			18x450x690			18x450x690			15x450x690	

7	708851	PCS	8	708852	PCS	9	708853	PCS	10	708854	PCS	11	708855	PCS	12	900240	PCS
		1			1			1			1			8			8
	15x300x1005			15x500x1005			15x112x1005			15x425x1005			45x45x975			Ø8x70	

13	903093	PCS	14	908371	PCS	15	908698	PCS	16	910056	PCS	17	980100	PCS	18	980104	PCS
		4			2			4			1			24			32
	Ø8x90			42–38/40			3x114x108			140x690			Ø5x60			Ø5x90	

19	980123	PCS	20	980128	PCS
		27			14
	Ø7x60			Ø7x40	

Copyright Lappset Group Ltd

LAPPSET®

081702M

DATE: 12.8.2019

709261+		709262+	
910330	PCS	910567	PCS
SURFACE	2	CONCRETE	2
152x200x200		117x117x715	

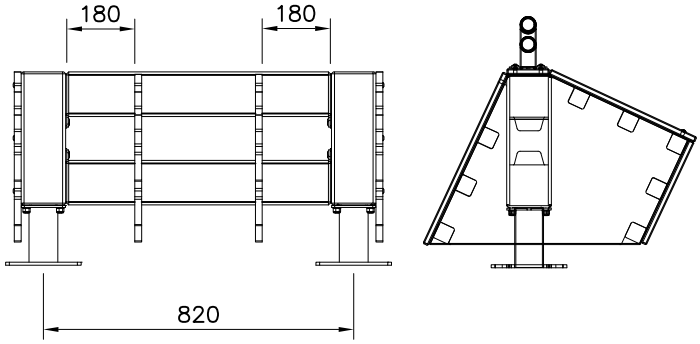

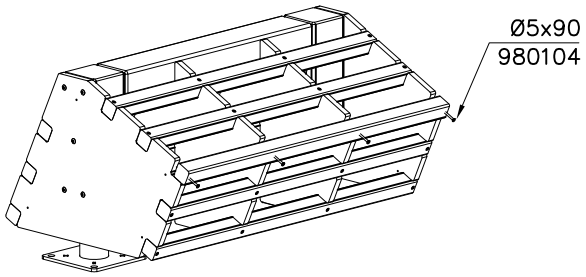

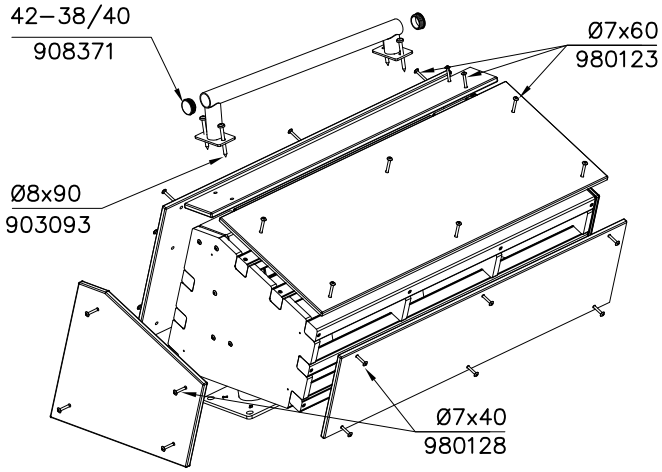

1:50

0 2

---- Falling Space 13 m2

Max Falling Height 660 mm

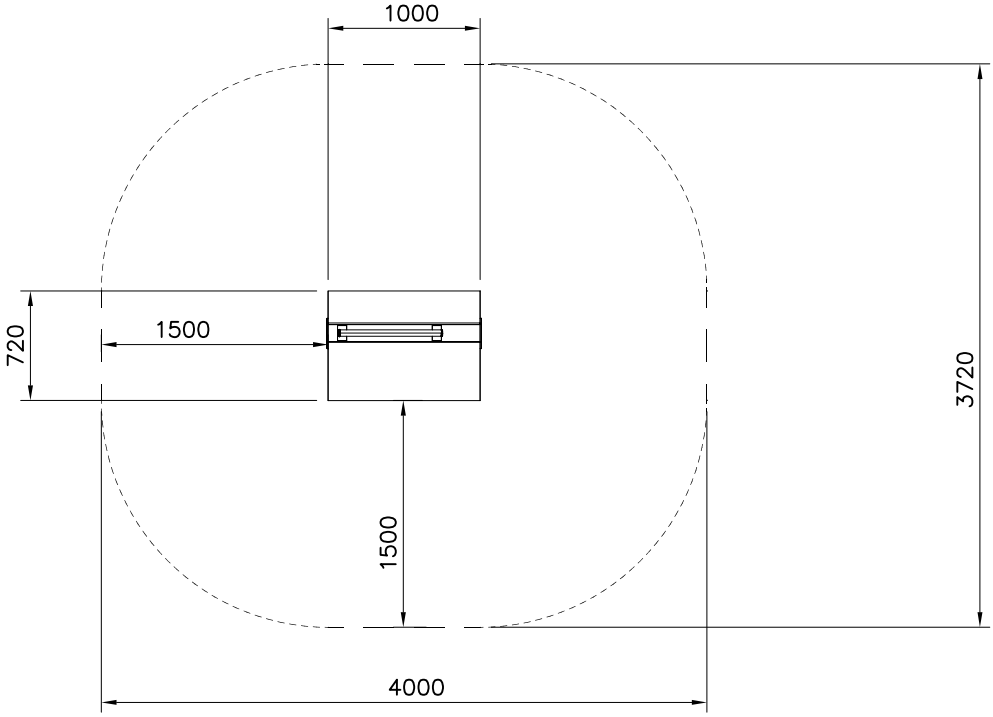

Copyright 1998 Lappset Group Ltd

LAPPSET®

081737M

DATE: 20.4.2020

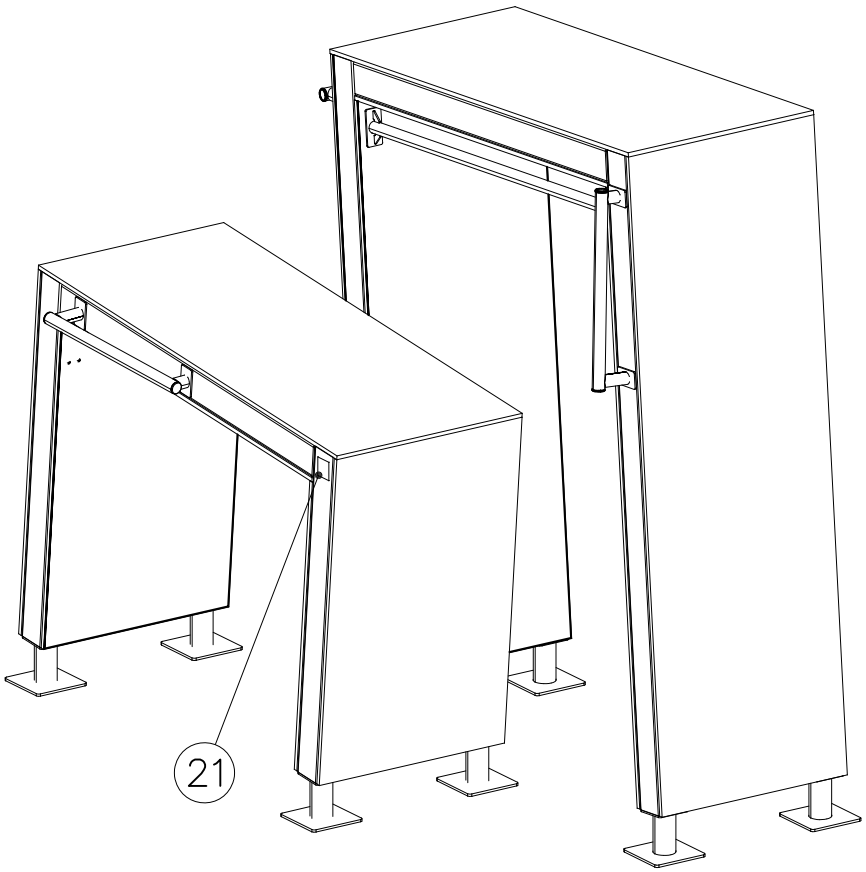

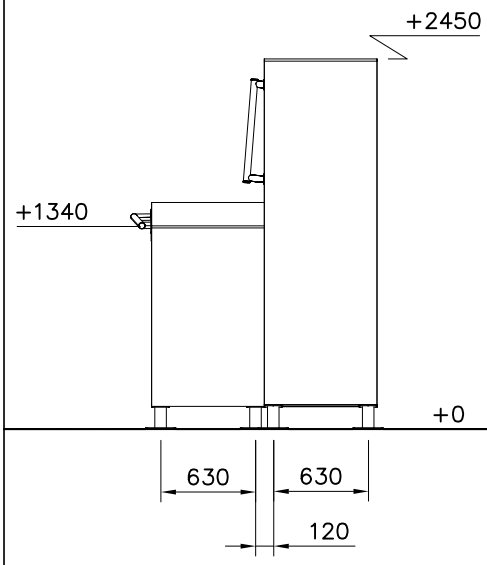

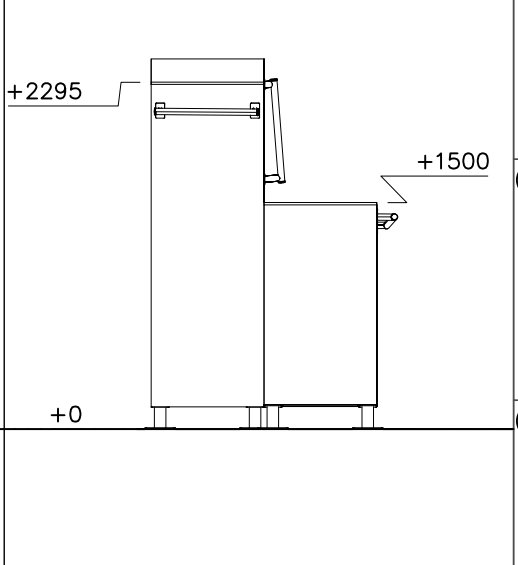

		PCS			PCS
1	707210	8	2	707213	4
	118x118x503			118x118x1490	
3	708042	2	4	708125	2
	118x118x1185			118x118x1326	
5	708522	2	6	708688	2
	118x118x2139			118x118x2279	
7	708721	2	8	708722	1
	15x745x1766			15x745x2280	
9	708723	1	10	708724	1
	15x745x1185			15x745x1326	
11	708857 JIG	1	12	900240	100
	20x133x149			Ø8x70	
13	903093	16	14	903533	6
	Ø8x90			SRL12	
15	905103	16	16	905112	16
	PT-28/32-H			Ø22	

Copyright Lappset Group Ltd

LAPPSET®

081737M

DATE: 20.4.2020

17	908371	PCS	18	908698	PCS	19	910056	PCS	20	910266	PCS	21	702286	PCS	22	910328	PCS
		6			16			3			8			1			3
	42–38/40			3x114x108			140x690			90x108x118			65x65			L 1466	
23	980100	PCS	24	980123	PCS	25	911297 MURAL	PCS	26	911293 COLOR	PCS	27	911295 COLOR	PCS	28	911301 COLOR	PCS
		96			106			1			1			1			1
	Ø5x60			Ø7x60			12x745x2140			15x745x2145			15x745x2004			15x745x1495	
29	911103 COLOR	PCS	30	911305 COLOR	PCS	31	911307 COLOR	PCS	32	905086	PCS	33	909132	PCS	34	909248	PCS
		1			1			1			2			1			1
	15x745x1495			15x745x1192			15x745x1050	31		Ø44/13.5x3.9			M12x280			M12	
35	980114	PCS															
		4															
	Ø4x20																

FOOT OPTIONS

709261+		709262+	
910267 SURFACE	PCS	910567 CONCRETE	PCS
	8		8
152x200x200		117x117x715	

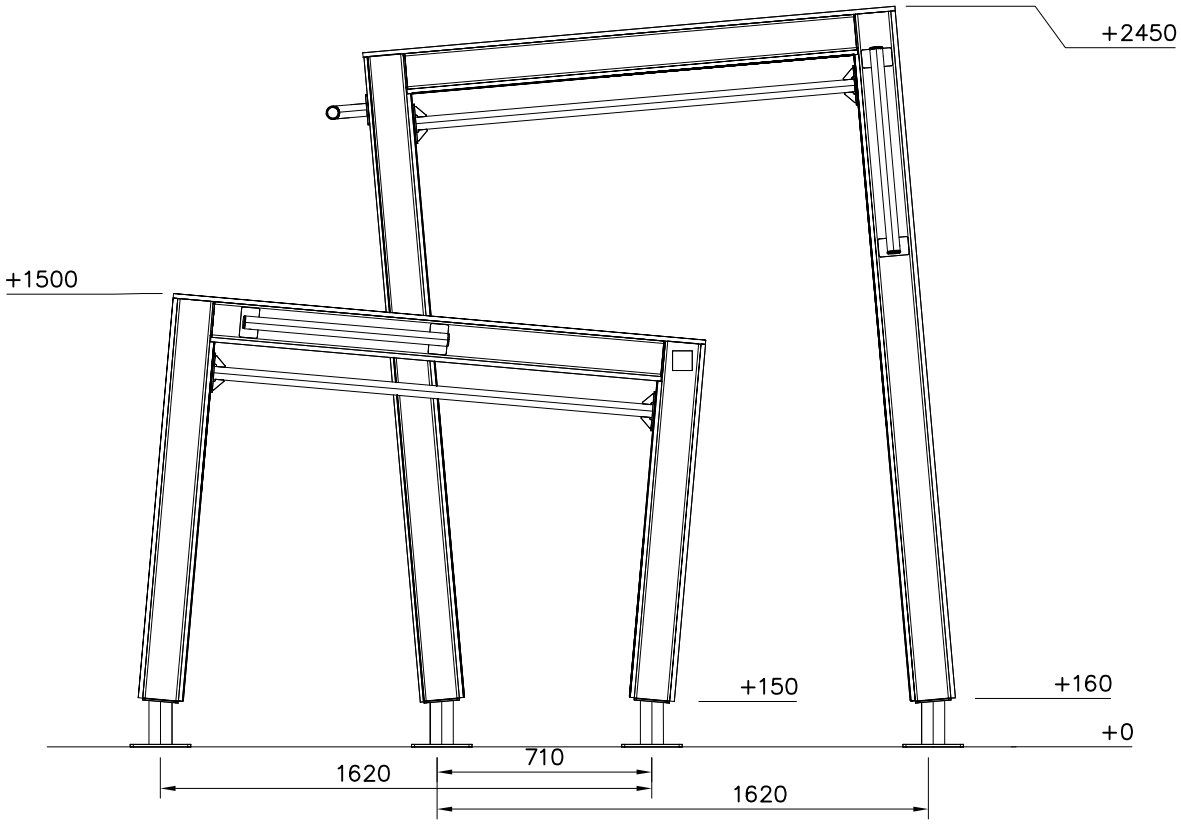

Copyright Lappset Group Ltd

LAPPSET®

081737M

DATE: 20.4.2020

EN Impact Attenuating Surface (IAS) 27.6 m2

Falling Space 27.6 m2

Max Falling Height 2450 mm

1:50

0 2

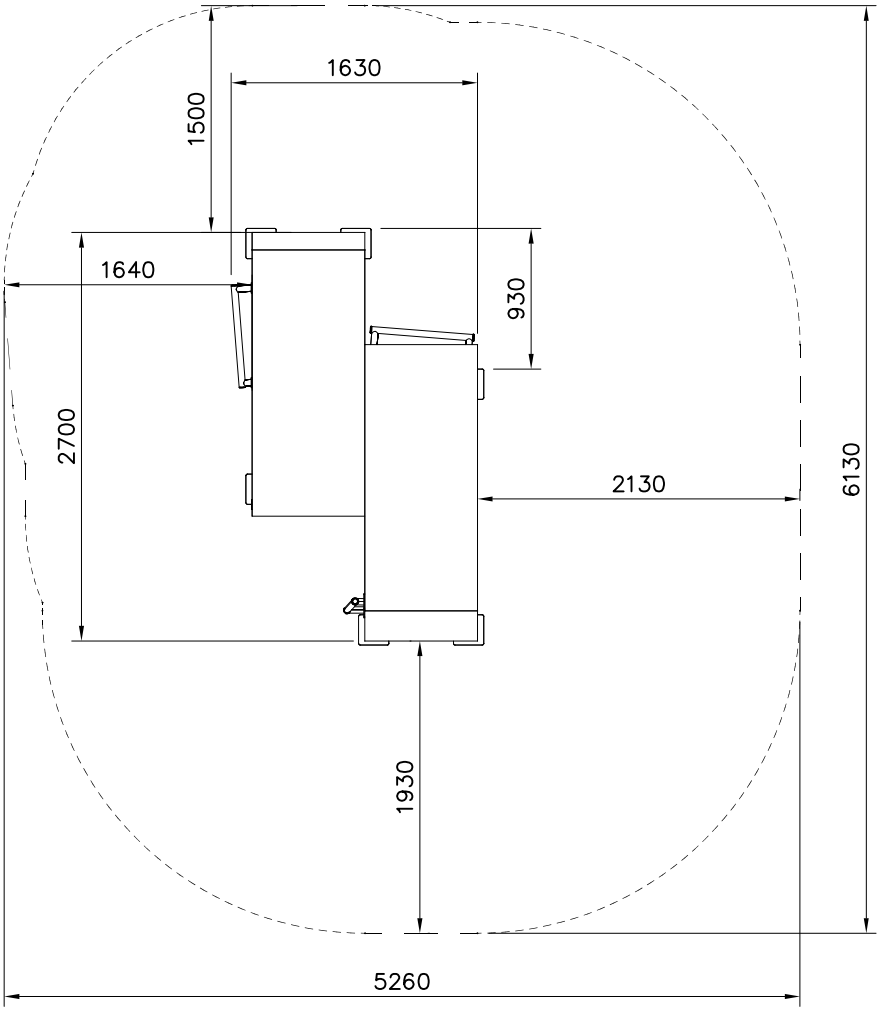

DET 1

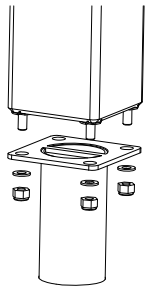

DET 2

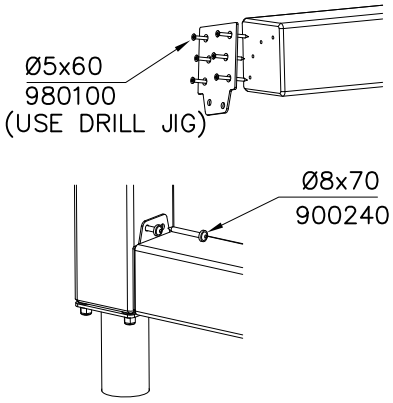

DET 3

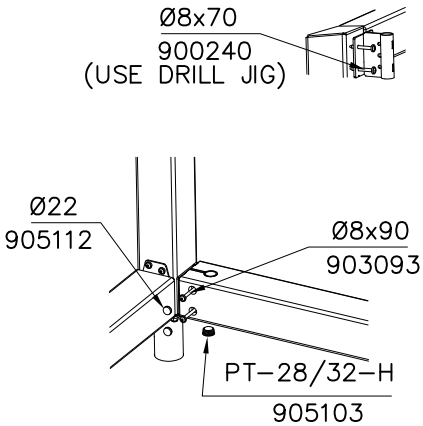

Copyright Lappset Group Ltd

LAPPSET®

081737M

DATE: 20.4.2020

DET 4

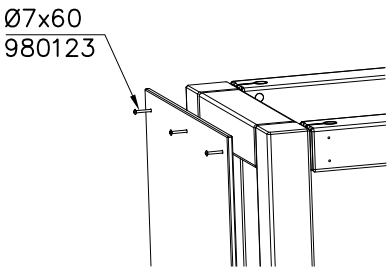

DET 5

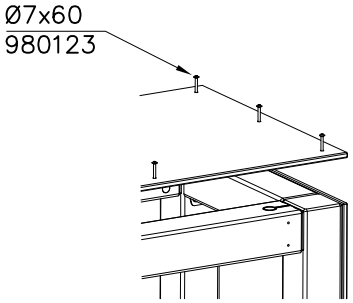

DET 6

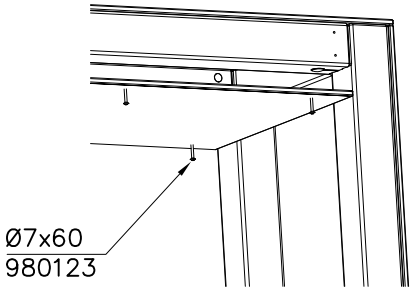

DET 7

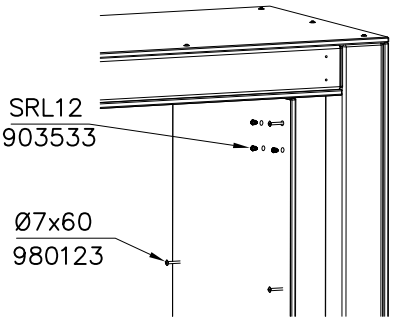

DET 8

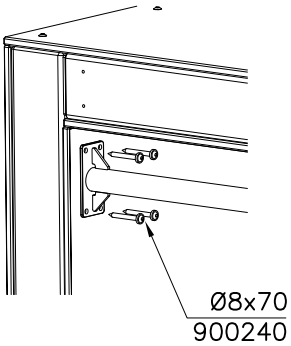

DET 9 DRILL PREHOLES Ø6mmBEFORE INSTALLING HANDLES

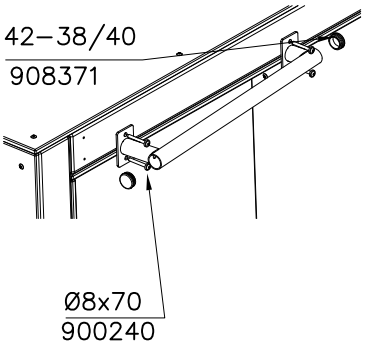

DET 10

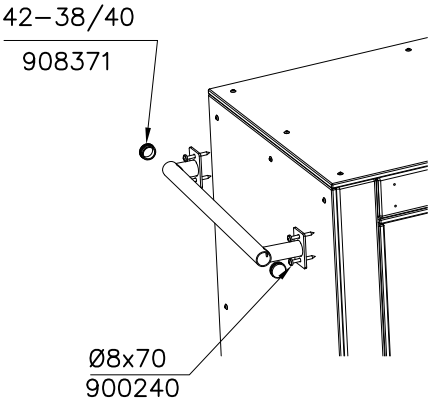

DET 11 DRILL PREHOLES BEFORE INSTALLING HANDLES

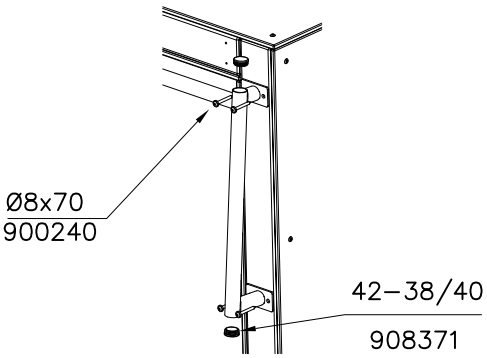

Copyright 1998 Lappset Group Ltd

LAPPSET®

081737M

DATE: 20.4.2020

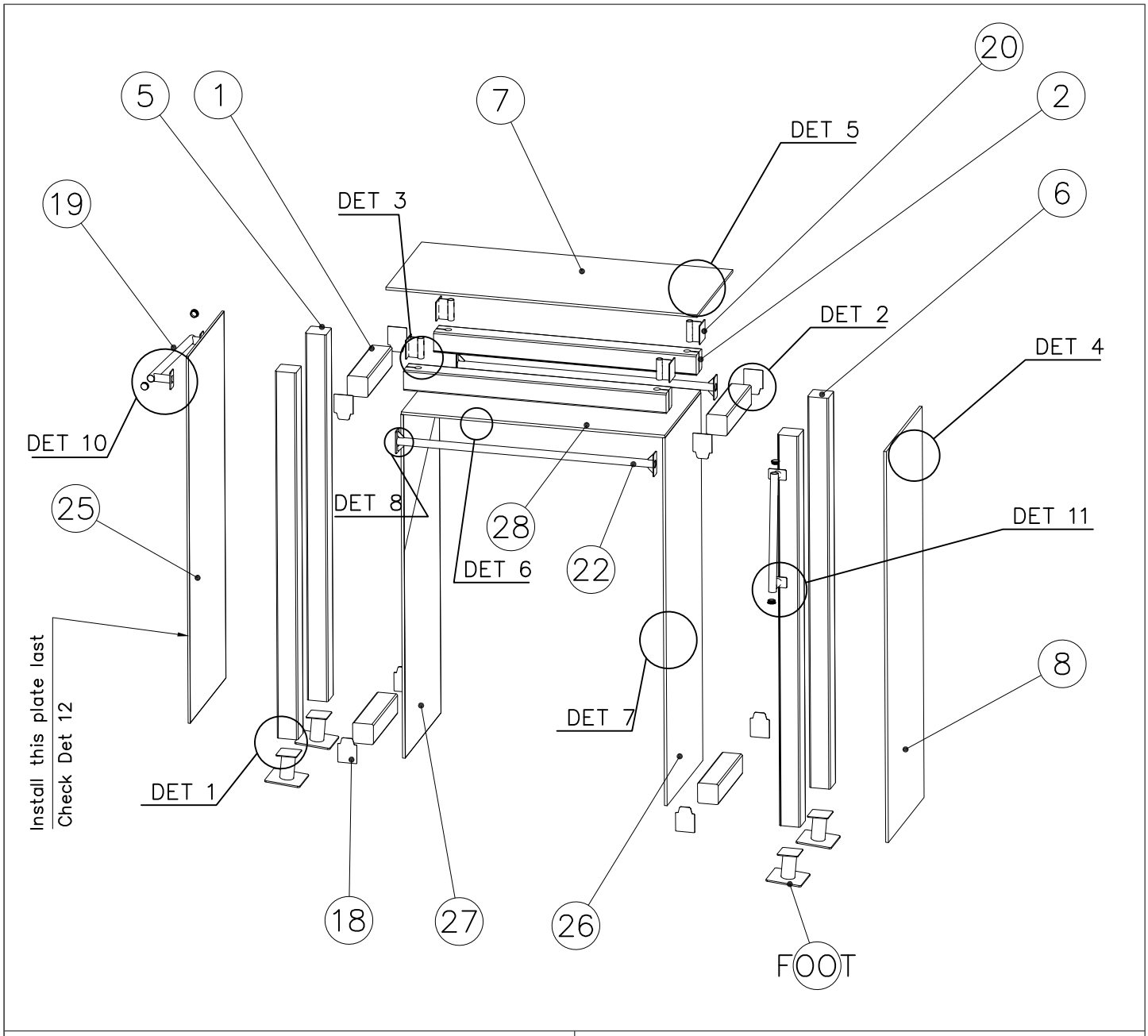

JIG DET A (USE DET 2–3)

NOTE:
Use drill jig 708857
to predrill Ø5↧50
holes for 910266
and 908698

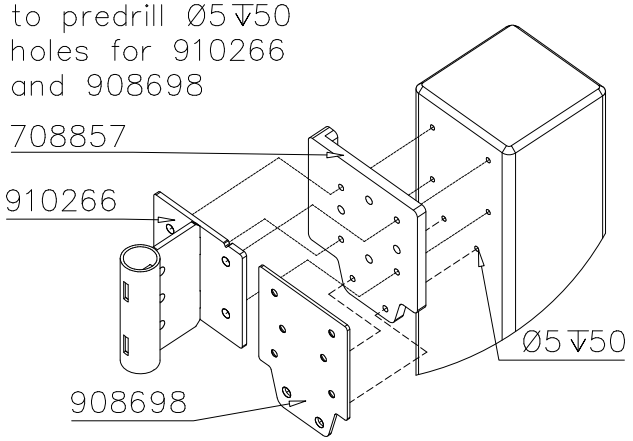

JIG DET B (USE DET 11)

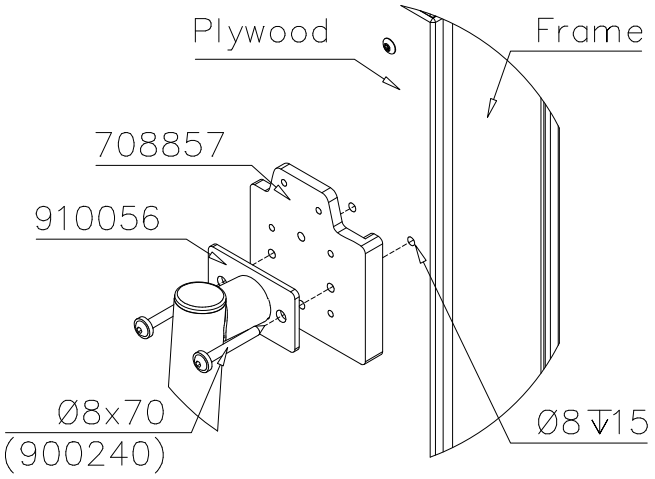

Copyright Lappset Group Ltd

LAPPSET®

081737M

DATE: 20.4.2020

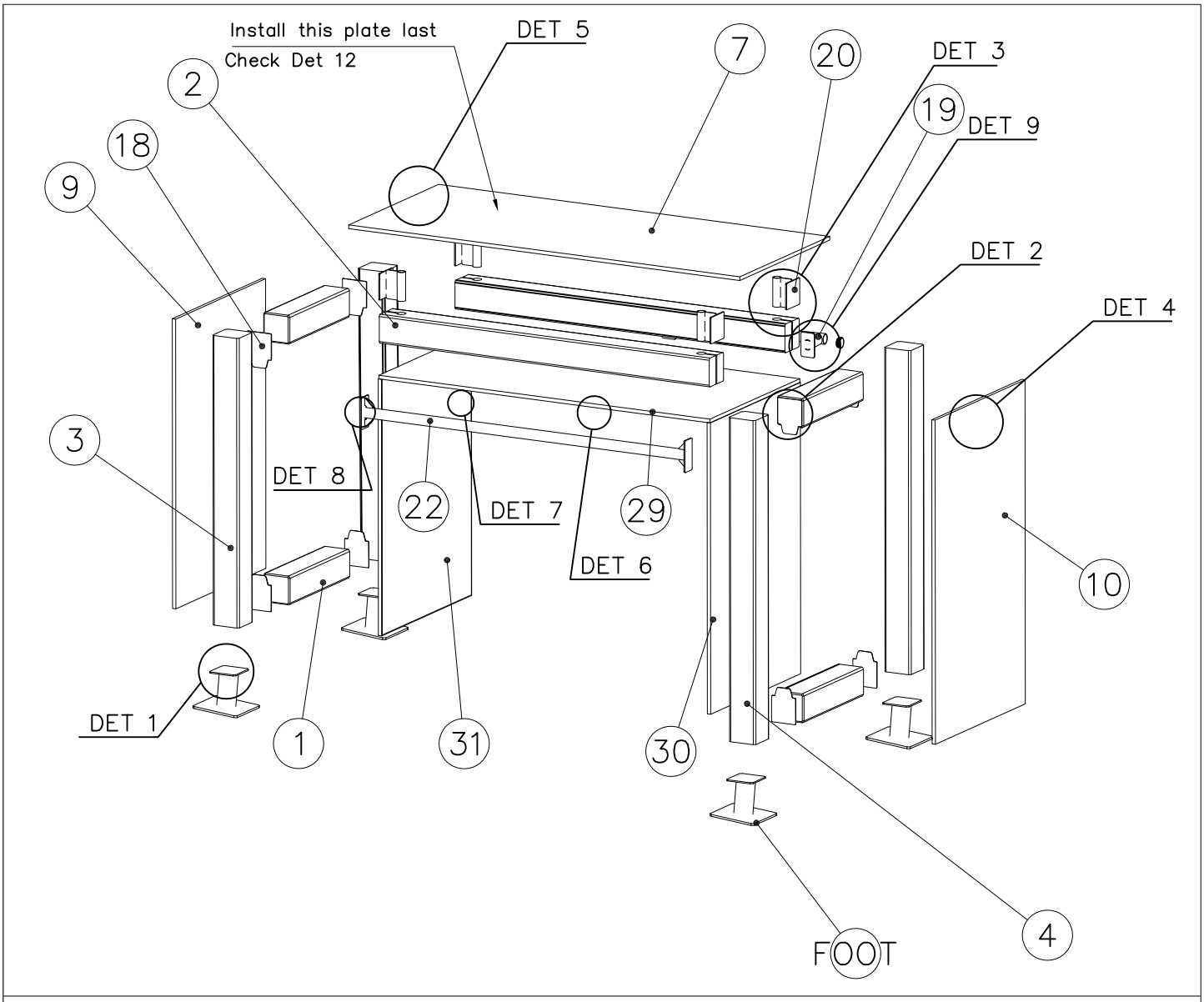

DET 12

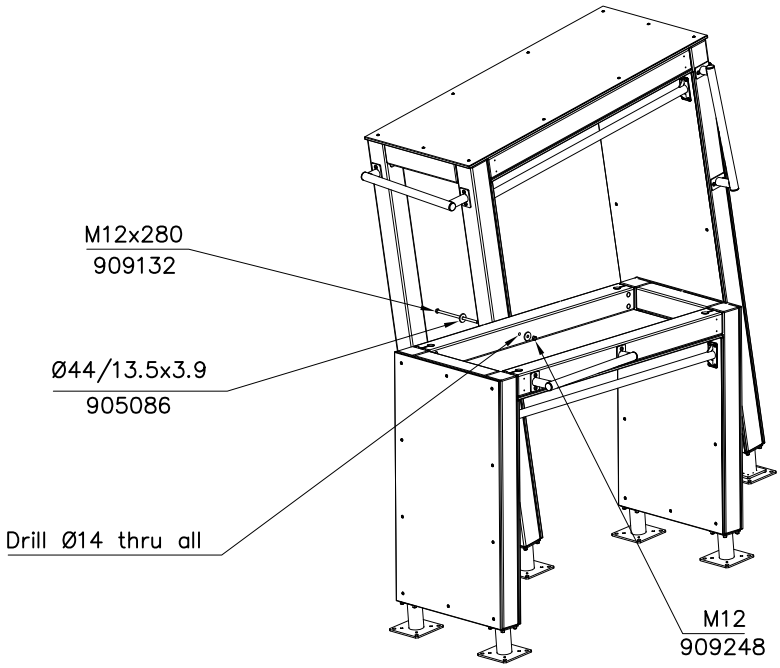

Copyright Lappset Group Ltd

LAPPSET®

081741M

DATE: 7.11.2019

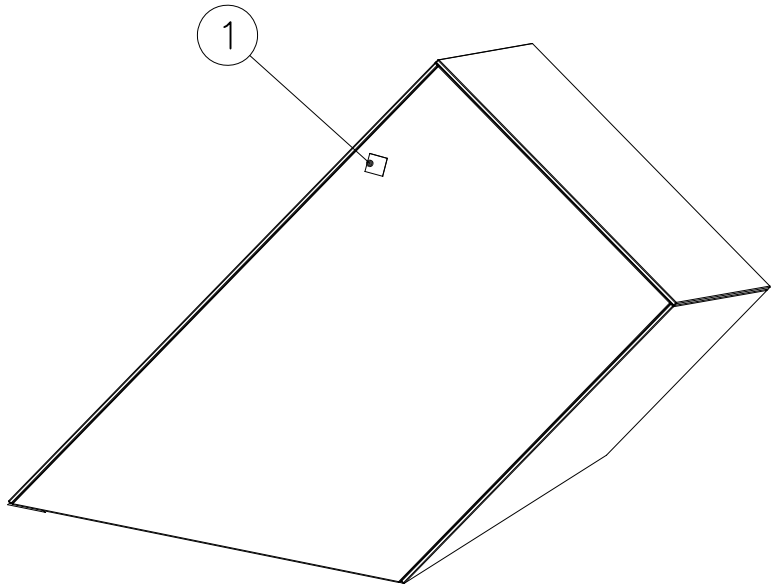

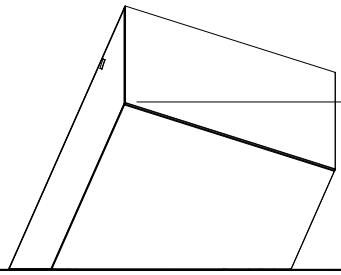

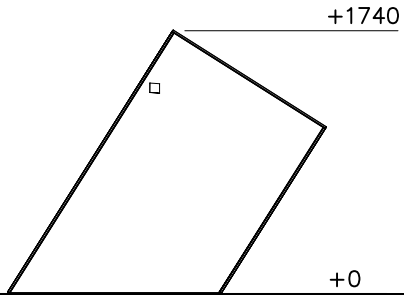

		PCS
1	702341 90x50	1
2	709159 15x1200x1486	1
3	709160 15x1486x2174	1
4	709161 15x1170x2170	1
5	709162 15x1376x1486	1
6	709163 15x1170x1620	1
7	709164 18x80x1135	2
8	709165 18x80x1420	2
9	902233 M10x30	24
10	905112 Ø22	24
11	909637 M10	24
12	909638 Ø20/10.5	48
13	909876 M8x40	48
14	910744 154x1160x1445	1
15	910768 30x60x1349	2
16	910769 30x60x1504	2
17	910793 L 2158	1
18	910794 L 1425	1
19	910795 L 1646	1
20	910796 L 884	1

Copyright Lappset Group Ltd

LAPPSET®

081741M

DATE: 7.11.2019

21	980108	PCS	22	980128	PCS	23	980150	PCS	24	980151	PCS
		4			12			48			48
	Ø4x25			Ø7x40			M8			Ø16/8.4	

FOOT OPTION

709387+

709386	PCS	910567	PCS
SURFACE	1	CONCRETE	4
M16x170		117x117x715	

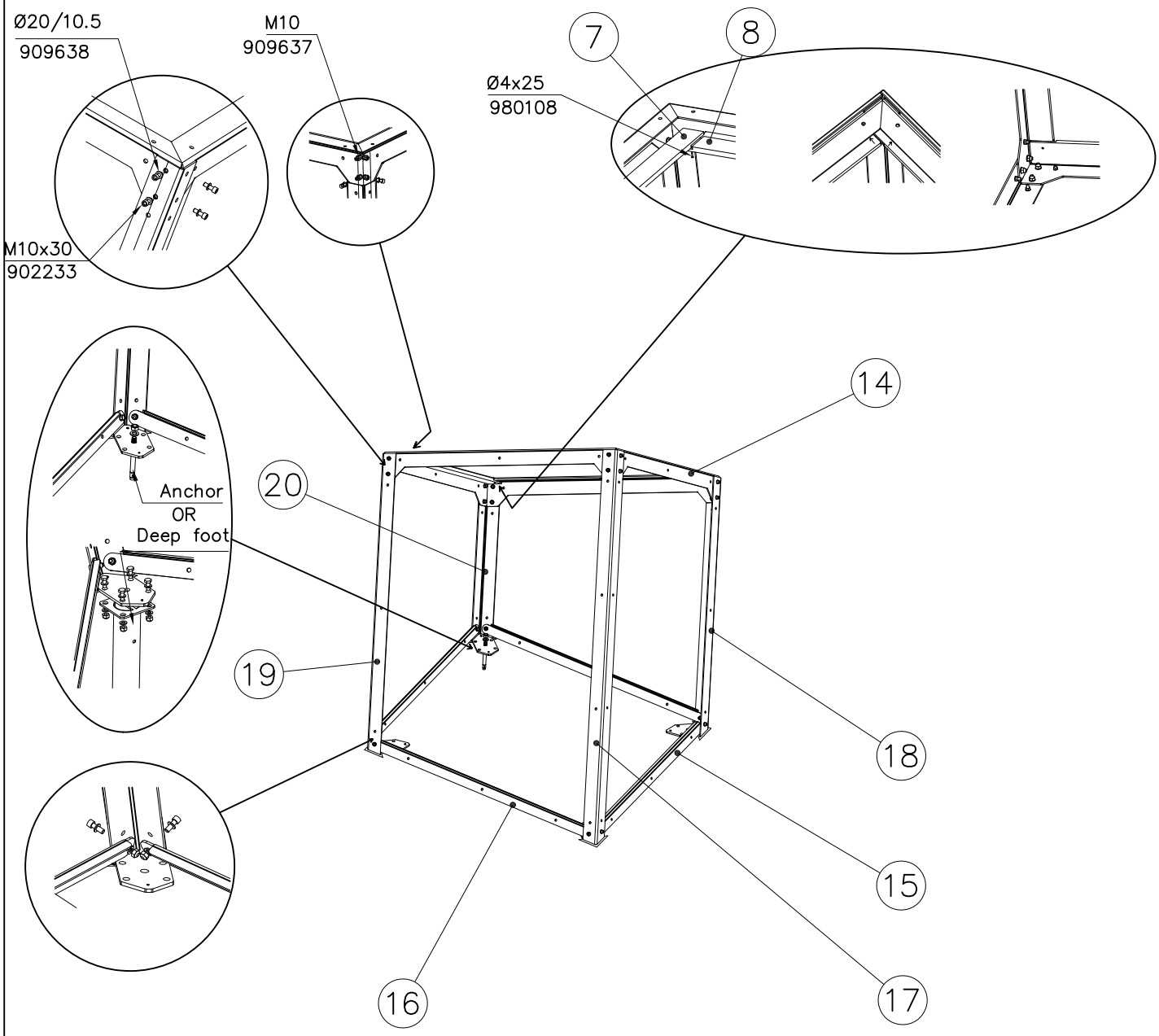

Copyright 1998 Lappset Group Ltd

LAPPSET®

081741M

DATE: 7.11.2019

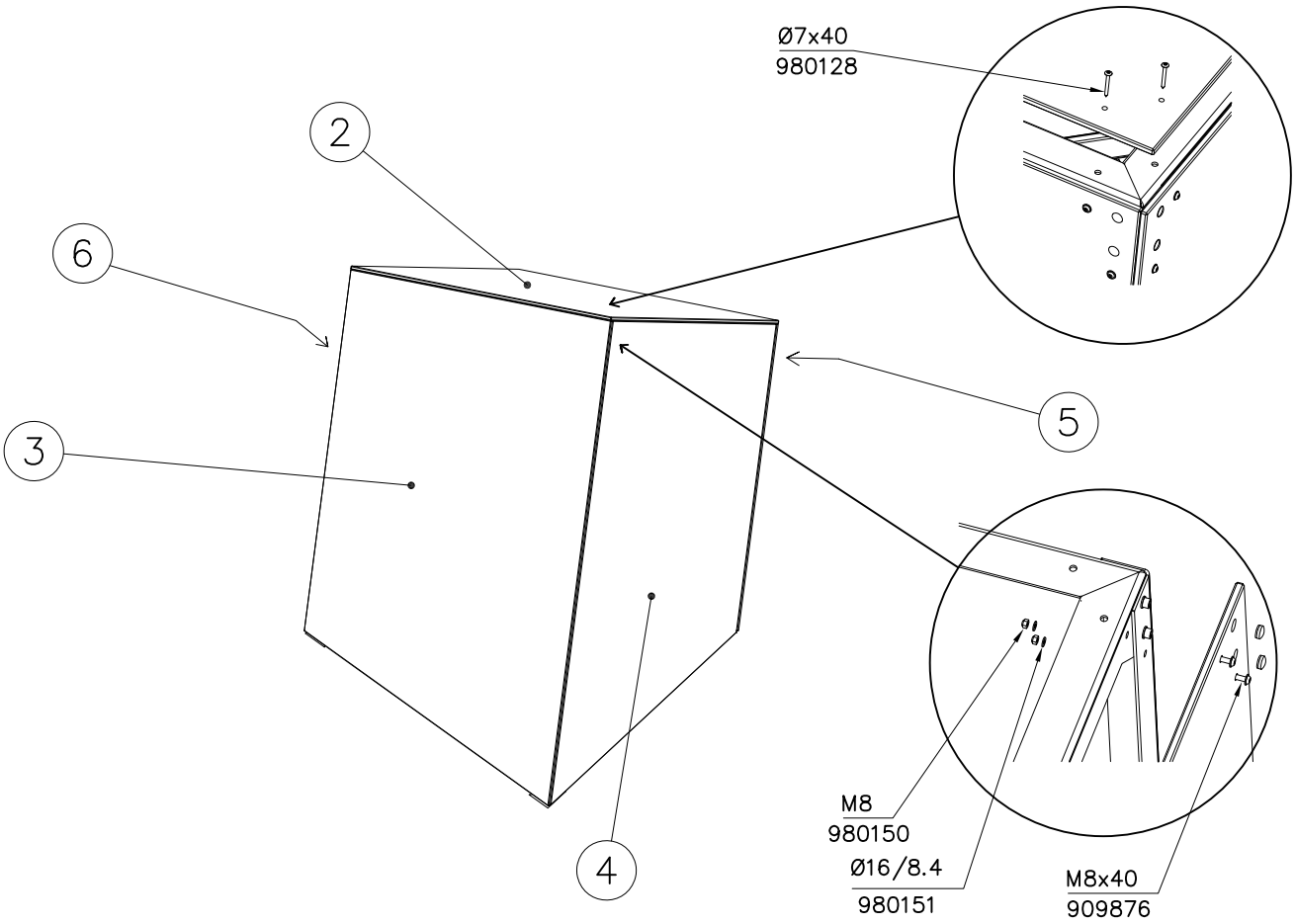

EN Impact Attenuating Surface (IAS) 24.4 m2

Falling Space 24.4 m2

Max Falling Height 1740 mm

1:75

0 3

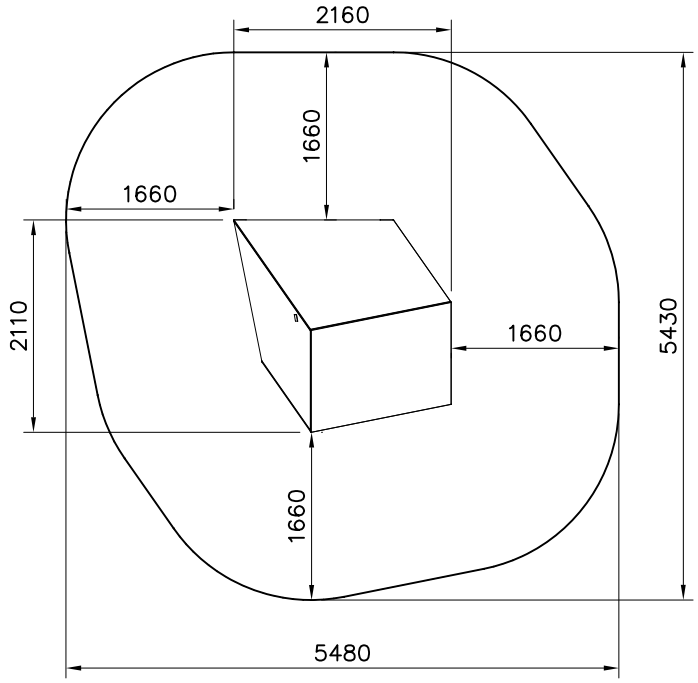

Copyright 1998 Lappset Group Ltd

LAPPSET®

081750M

DATE: 17.6.2020

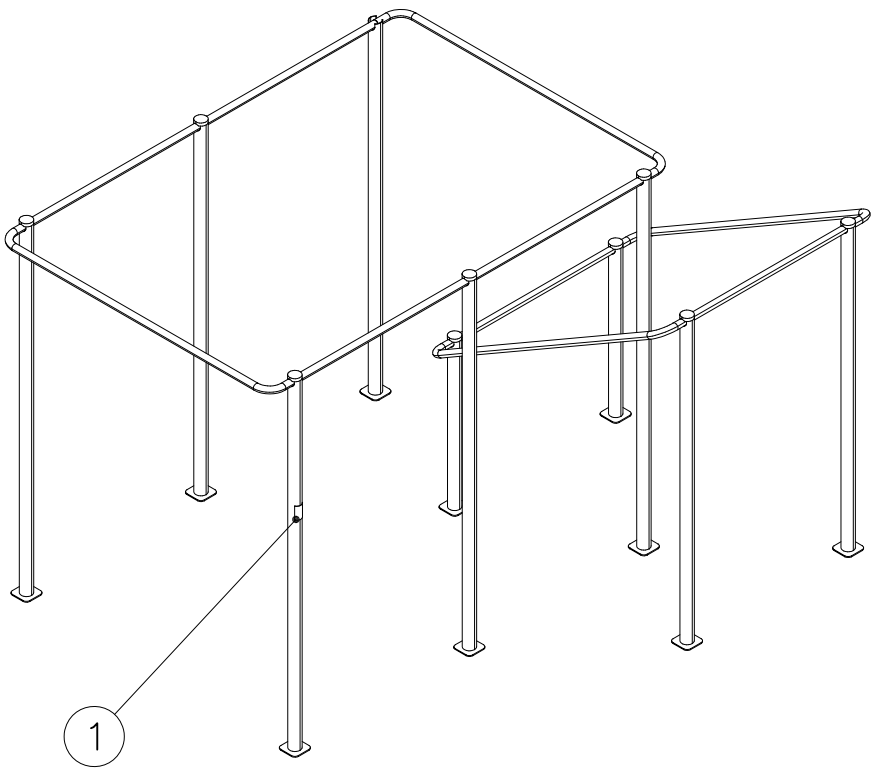

		PCS			PCS
1	702341	1	2	704879	10
	90x50			3x30x120mm	
3	708880	10	4	980151	8
	Ø77x20			Ø16/8.4	
5	904133	20	6	909258	8
	M10x80			M8x55	
7	909633	8	8	910547	2
	M8			Ø42.4x1200	
9	910549	4	10	910556	6
	Ø42.4x286x2042			L 2400	
11	910557	10	12	910563	2
	10x45x87			L 2100	
13	910564	2	14	910704	2
	L 1100			Ø42.4x2600	

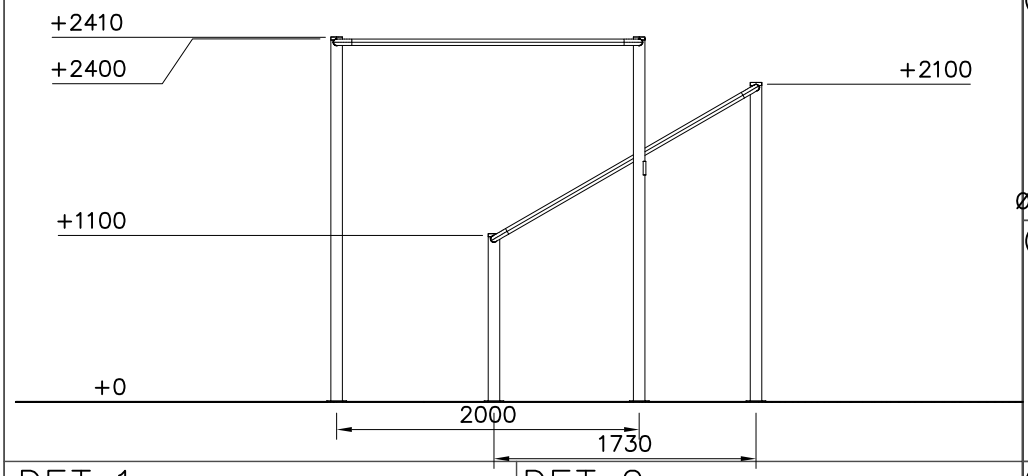

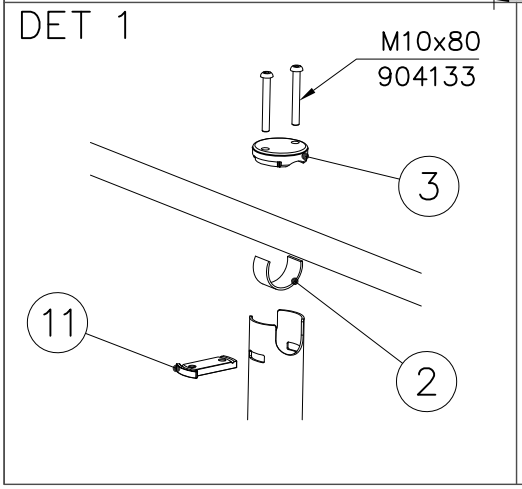

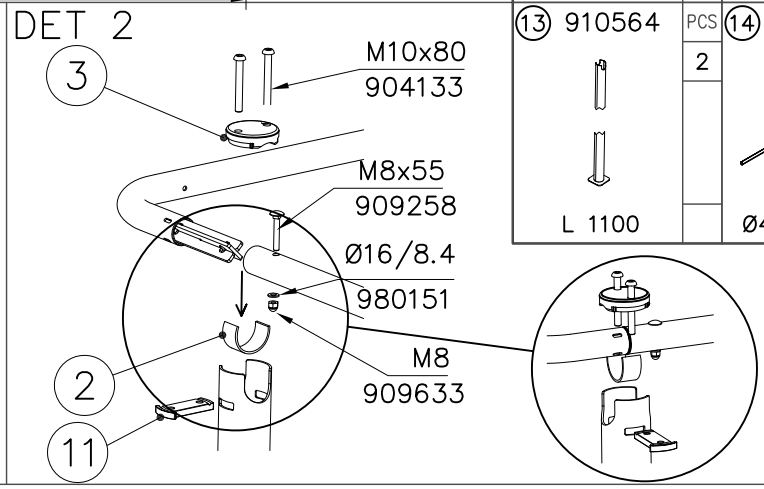

Copyright Lappset Group Ltd

LAPPSET®

081750M

DATE: 17.6.2020

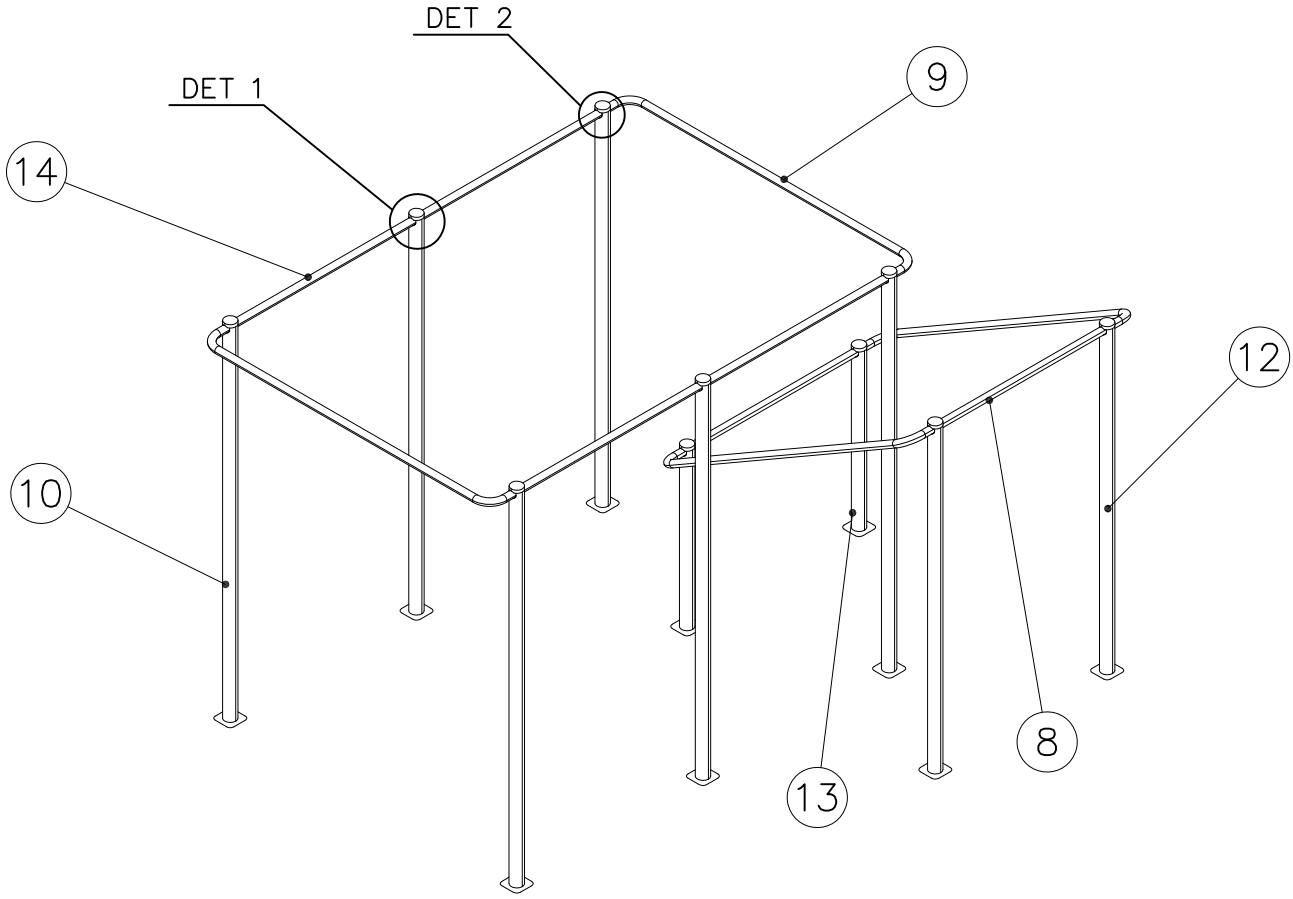

EN Impact Attenuating Surface (IAS) 45.7 m2

Falling Space 45.7 m2

Max Falling Height 2410 mm

1:75

0 3

INSTALLING FOR SURFACE MOUNTING

	PCS
709396	10

FOOT OPTION FOR DEEP MOUNTING

709397+

	PCS
910562	10
L 600	

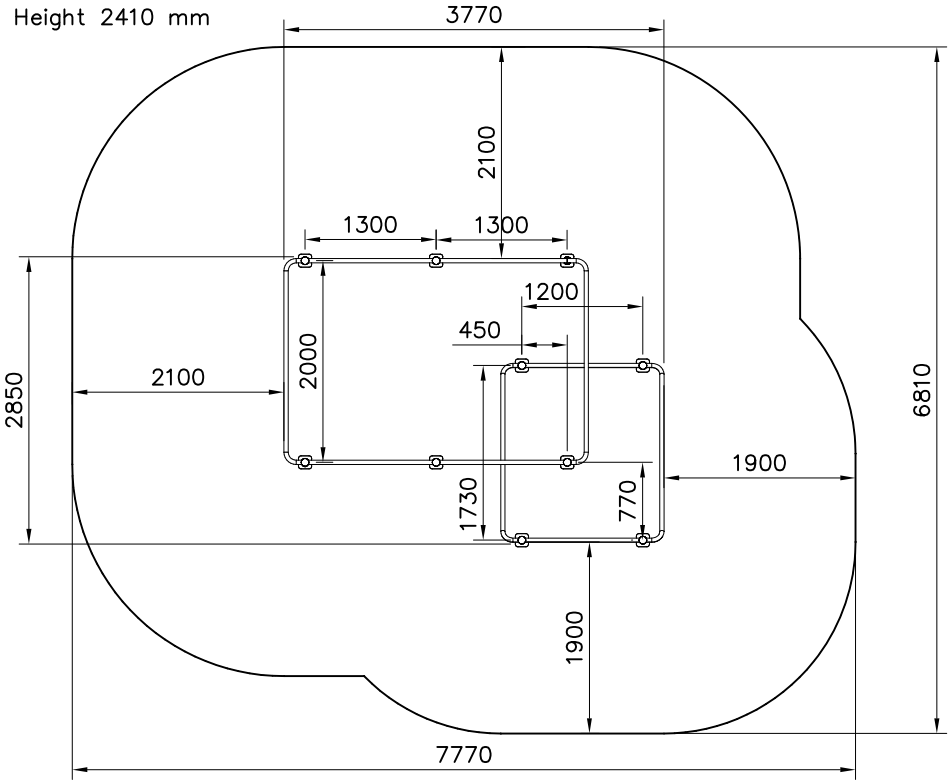

Copyright 1998 Lappset Group Ltd

LAPPSET®

IAS EN 16899

REF:
DATE: **24.9.2020**

4x

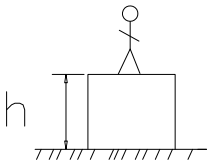

h < 1600

Totally hard surfaces or materials with very limited impact attenuating properties.

Case by case risk assessment is needed including e.g. evalution whether there is forced movement, what is the intended exercise and where will the product be installed.

Materials with significant impact attenuating properties.

Totally hard surfaces.
E.g. concrete or asphalt

Materials with very limited impact attenuating properties.
E.g. wood

fine gravel 0–8 mm

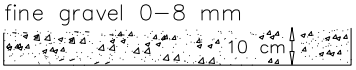

Unsorted sand/ topsoil

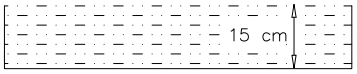

Lawn

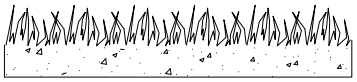

h = 1600- h < 3000

Loose fill material

E.g.
sand/gravel 0,25...8 mm D60/D10<3,0
Woodchips 5...30 mm
bark 20...80 mm

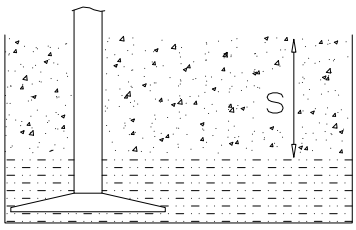

S	h
30 cm	< 3,0 m

Syntethic granulates

S	h
40 mm	~> 1,6...~< 1,8 m
50 mm	~> 1,8...~< 2,25 m
55 mm	~> 2,25...~< 2,4 m
60 mm	~> 2,4...~< 2,55 m
70 mm	~> 2,55...~< 3,0 m

Note. For accurate values, see manufacturer's instructions.

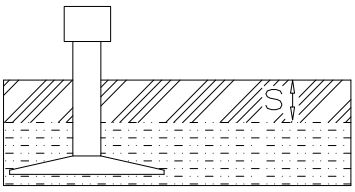

Copyright Lappset Group Ltd