LAPPSET®

GRIP

FINNO

DATE: 18.1.2016

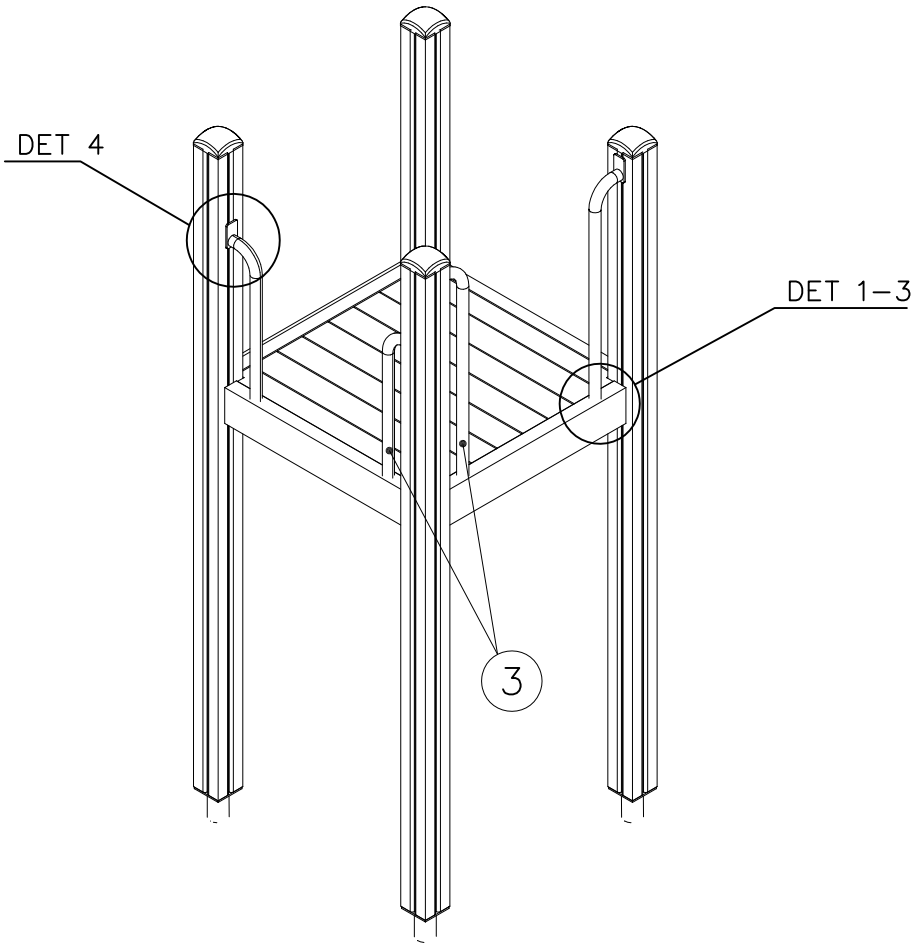

1 900240 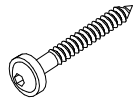 Ø8x70	PCS 1	2 900727 M10x80	PCS 1
	PCS		PCS
3 907688 765	PCS 1	3 907701 545	PCS 1
	PCS		PCS
	PCS		PCS
	PCS		PCS
	PCS		PCS
	PCS		PCS

DET 1

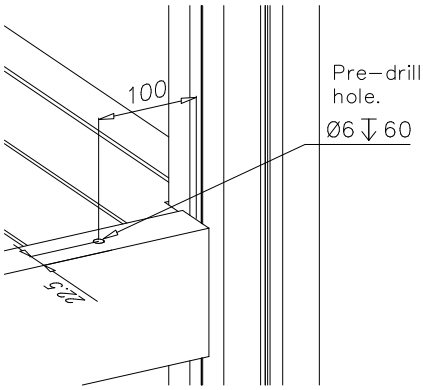

DET 2

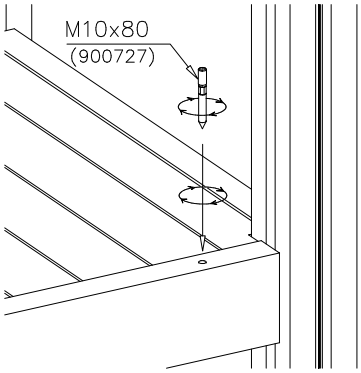

DET 3

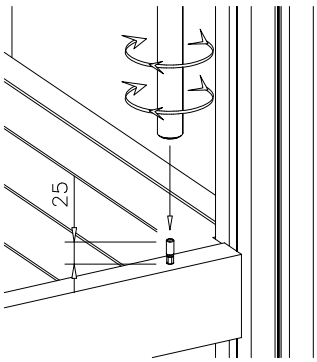

DET 4

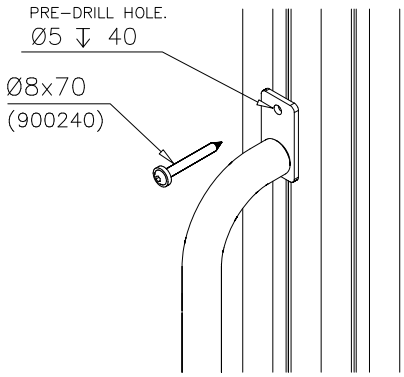

Copyright Lappset Group Ltd