LAPPSET®

FINNO

ASENNUSOHJE
MONTERINGSANSVISNING
INSTALLATION INSTRUCTION
AUFBAUANLEITUNG
NOTICE D'INSTALLATION

DATE: 1.9.2016

137603

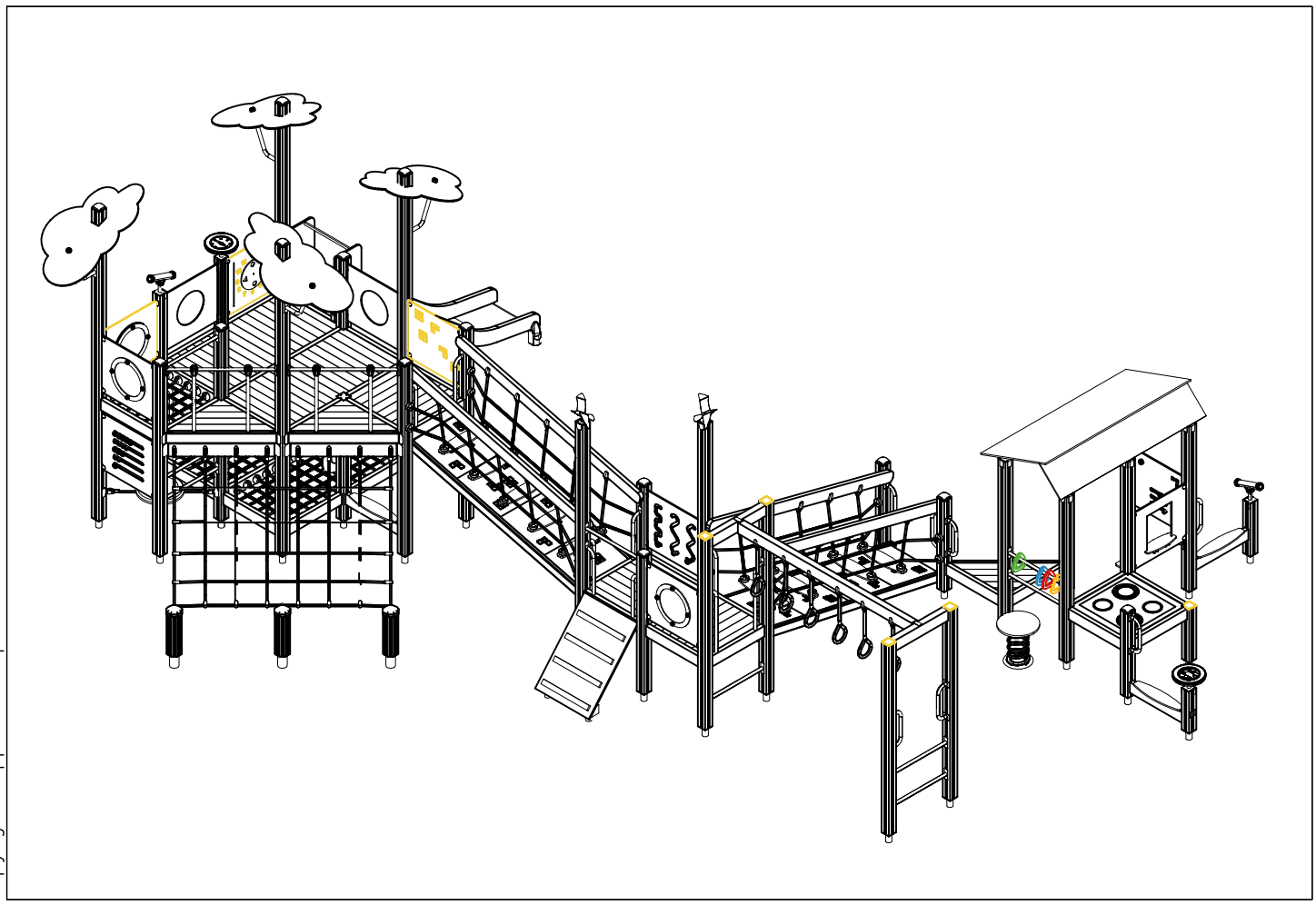

Copyright Lappset Group Ltd

LAPPSET®

FINNO

137603

DATE: 1.9.2016

	PCS		PCS		PCS		PCS		PCS		PCS
008985	3	008986	3	702286	1	702339	1	705369−701	2	705369−702	2
32x714x714		750x750		90x50		90x50					
705369−706	2	705369−707	2	705423	1	705705−702	1	706059−305	1	706308−702	1
						10x640x702		L 926		10x640x702	
706371−702	2	706436−702	1	706439−602	34	706441−602	2	706443	10	706450−602	1
15x345x750		10x640x702		L 704		93x93x1550		32x45x702		600x1380x3200	
706453	15	706466−602	2	706481−702	5	706484−602	10	706495	1	706496	1
15x145x600		93x93x1025		83x83x10		93x93x2150		15x900x1900		15x390x1900	
706505	2	706508	13	706510−602	3	706511−602	6	706512−602	2	706531	33
35x70x730		32x45x650		45x120x1030		93x93x1870		70x120x704			
706533	1	706534	1	706535	3	706537	3	706538	5	706727−702	1
										10x702x640	
706735−305	3	706742	3	706744	1	706753	1	706766−702	1	706772−702	1
				15x145x380							

Copyright Lappset Group Ltd

LAPPSET®

FINNO

137603

DATE: 1.9.2016

706778	PCS	706783	PCS	706790–602	PCS	706810–602	PCS	706885	PCS	706894–602	PCS
	2		1		4		2		1		1
		15x170x700		93x93x3500		93x93x2650				L 950	
706960	PCS	707133	PCS	707154–602	PCS	707209–702	PCS	707255–602	PCS	707260–305	PCS
	1		1		1		1		4		4
		10x80x745		93x93x900		10x640x702		45x120x2480		2375x600	
707268	PCS	707271–602	PCS	707272–702	PCS	707284	PCS	707303–701	PCS	707304	PCS
	2		4		8		2		1		2
		70x95x2480		15x630x590							
707305–703	PCS	707320–702	PCS	707328–701	PCS	707328–702	PCS	707331–602	PCS	707333	PCS
	1		1		2		2		1		1
				10x750x1290		10x750x1290		93x93x470			
707373	PCS	707374–602	PCS	707375–702	PCS	707386–702	PCS	707418–702	PCS	707419	PCS
	1		4		2		1		1		1
		L 1504		15x375x750		10x640x702		700x1000			
707420–602	PCS	707436	PCS	707437	PCS	707440	PCS	707441	PCS	707446	PCS
	1		2		2		2		2		1
93x93x1370		750x770		32x45x1502				750x770			
707449	PCS	707450	PCS	707453–702	PCS	707454	PCS	707515	PCS	707585	PCS
	1		2		4		4		1		4
				10x640x702							

Copyright Lappset Group Ltd

LAPPSET®

FINNO

137603

DATE: 1.9.2016

	PCS		PCS		PCS		PCS		PCS		PCS
707588	1	707589	2	707590–305 755x755	1	707593–602 45x120x1030	2	707595–305 755x1555	2	707597–602 140x140x450	3
707600–305	1	707615	1	707625	2	707665	4	707670–602 L 600	2	707693	2
707732	12	707783–602 70x120x2280	1	900240 Ø8x70	40	900733 Ø450x83	1	901868 Ø34x598	3	901879	2
902487 65x65	2	903093 Ø8x90	160	903112 L 750	3	905104 M10	24	905138 GRAY	14	905139 69x69x20	3
905196 GRAY	14	905197 147x147x56.5	3	905879	1	906635–216	7	907667–216	3	907688–216	4
907694–216 L 704	10	907701–216	8	907783–216	2	907920–216 120x40x1029	2	908044–216 Ø33,7x679	4	908207–216 336x392x40	4
908291–216 47x55x696x3	1	908357–206	2	909256 Ø16/8.4x1.6	40	909506 Ø3.5x13	8	909511 90x90x650	33	909519 50x380x380	33

Copyright Lappset Group Ltd

LAPPSET®

FINNO

137603

DATE: 1.9.2016

980107	PCS	980123	PCS	980128	PCS	980131	PCS		PCS		PCS
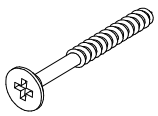	10	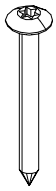	48		16	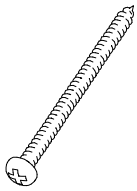	68				
Ø6x60		Ø7x60		Ø7x40		Ø6x60					
	PCS		PCS		PCS		PCS		PCS		PCS
	PCS		PCS		PCS		PCS		PCS		PCS
	PCS		PCS		PCS		PCS		PCS		PCS
	PCS		PCS		PCS		PCS		PCS		PCS
	PCS		PCS		PCS		PCS		PCS		PCS
	PCS		PCS		PCS		PCS		PCS		PCS

Copyright Lappset Group Ltd

LAPPSET®

FINNO

137603

DATE: 1.9.2016

EN/AS Impact Area 76 m2

Grid Size 500 mm

1:100

0 5

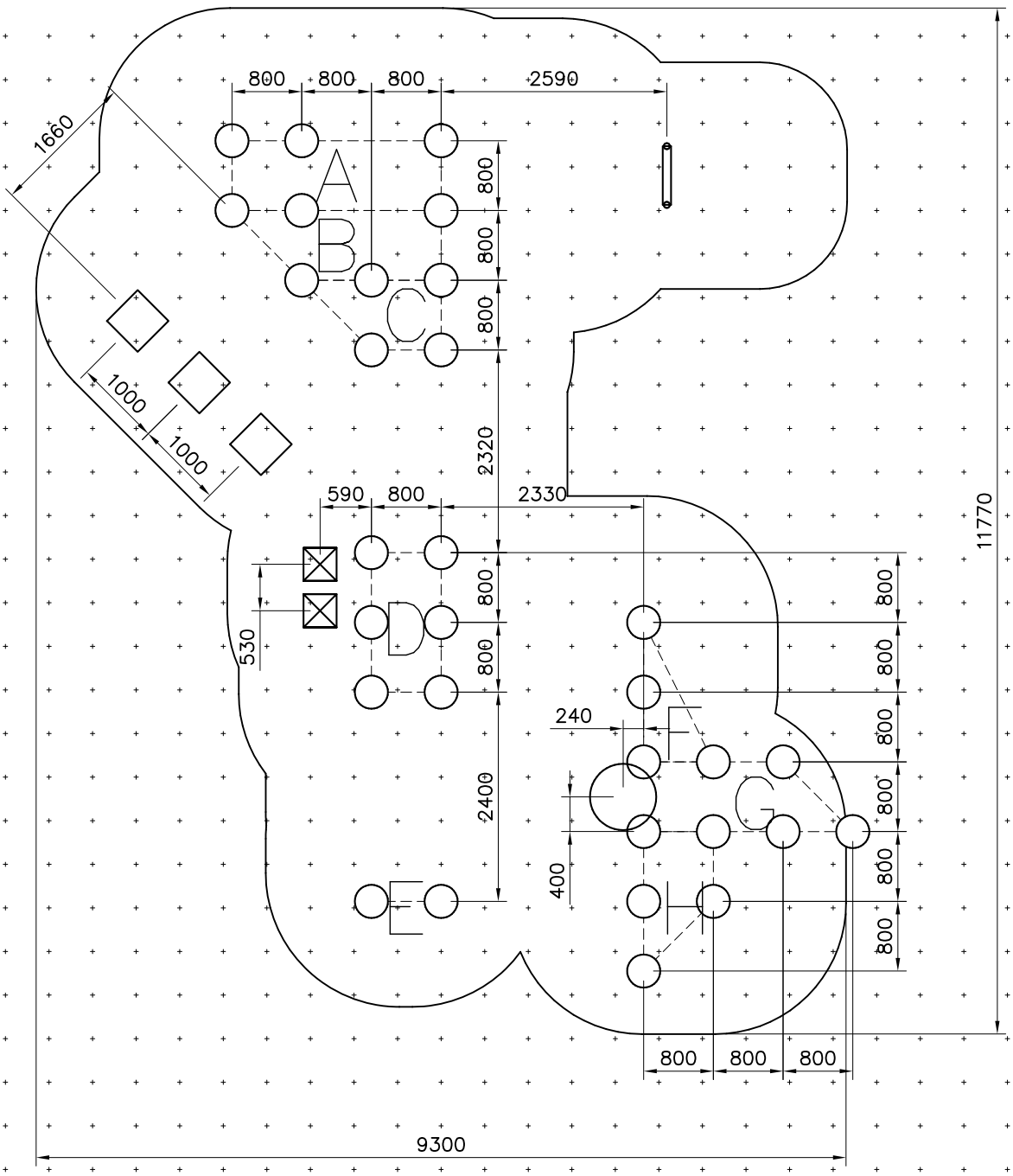

Copyright Lappset Group Ltd

LAPPSET®
FINNO

137603

DATE: 1.9.2016

EN/AS Impact Area 76 m2

Falling Space 85.3 m2

Max Falling Height 1470 mm

1:75

0 3

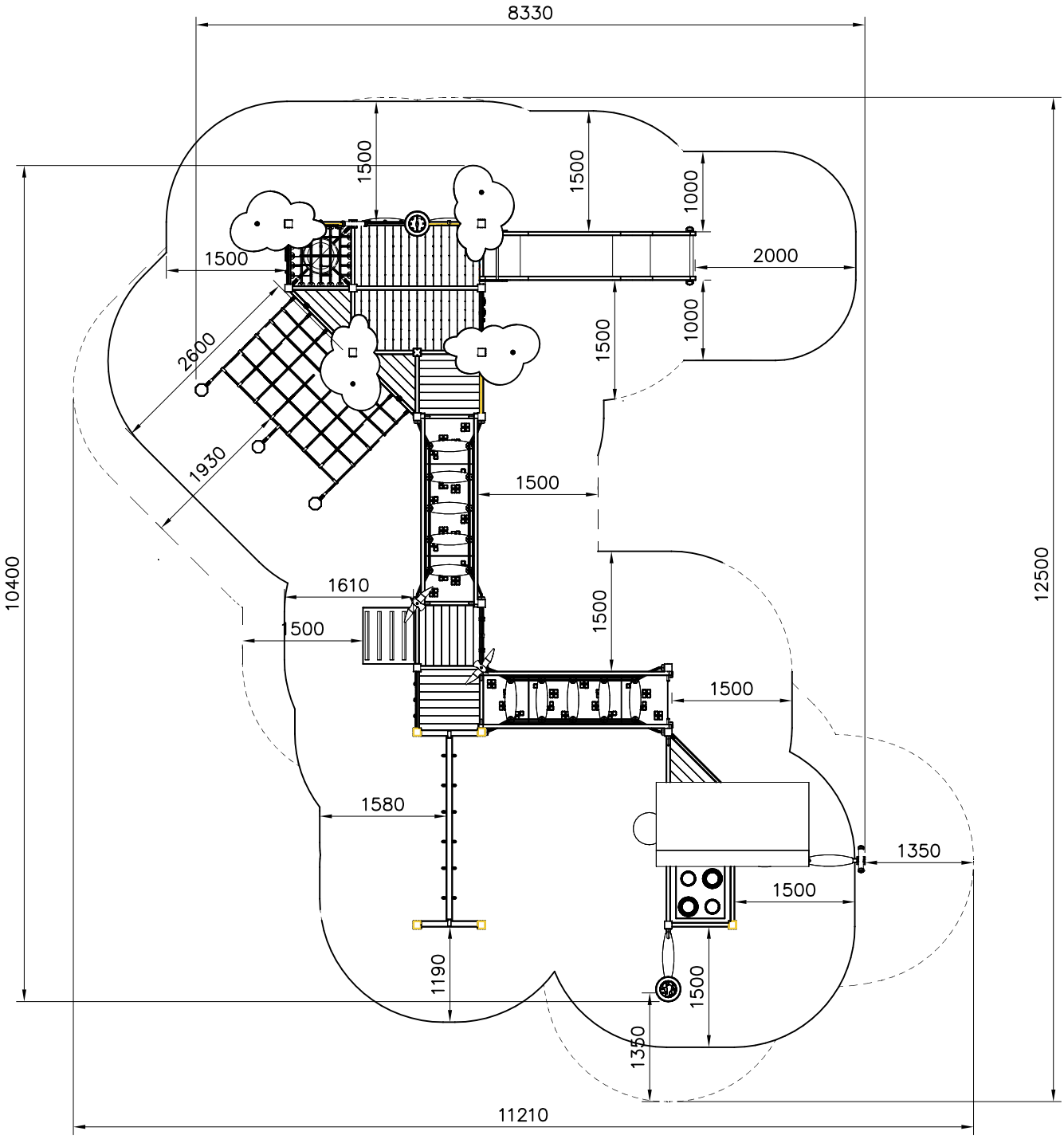

Copyright Lappset Group Ltd

LAPPSET®
FINNO

137603

DATE: 1.9.2016

5A

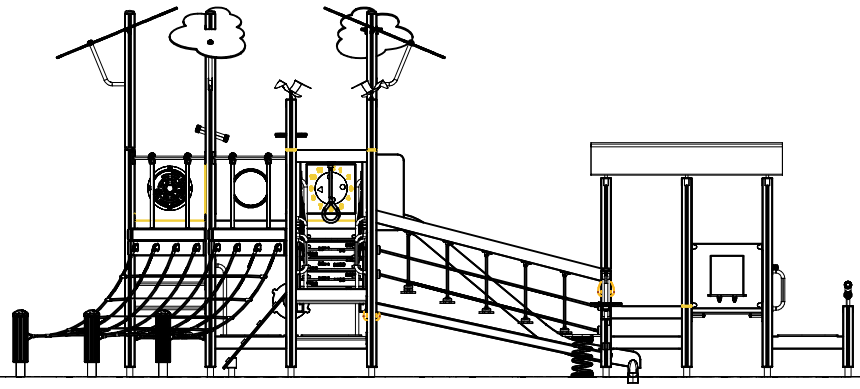

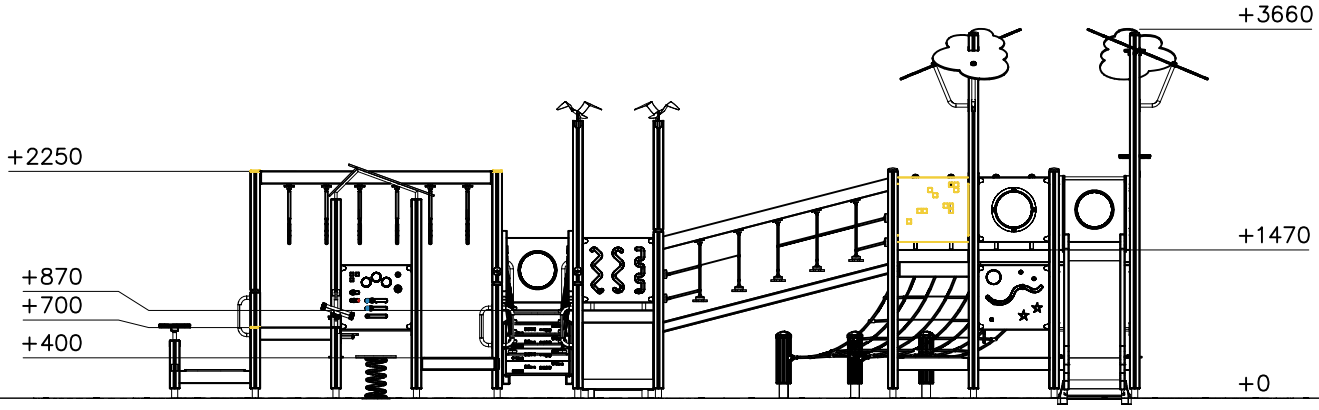

Copyright Lappset Group Ltd

LAPPSET®
FINNO

137603

DATE: 1.9.2016

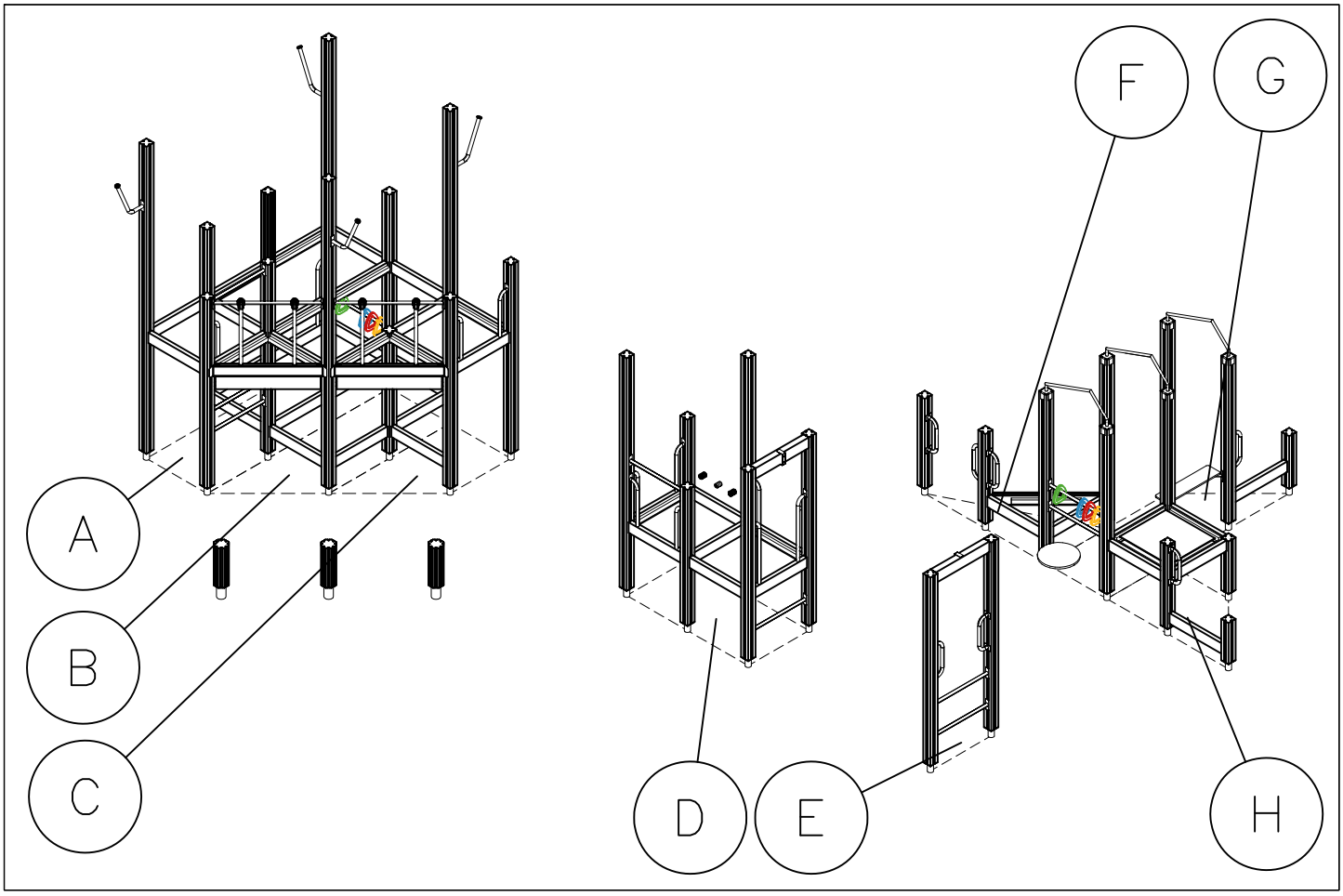

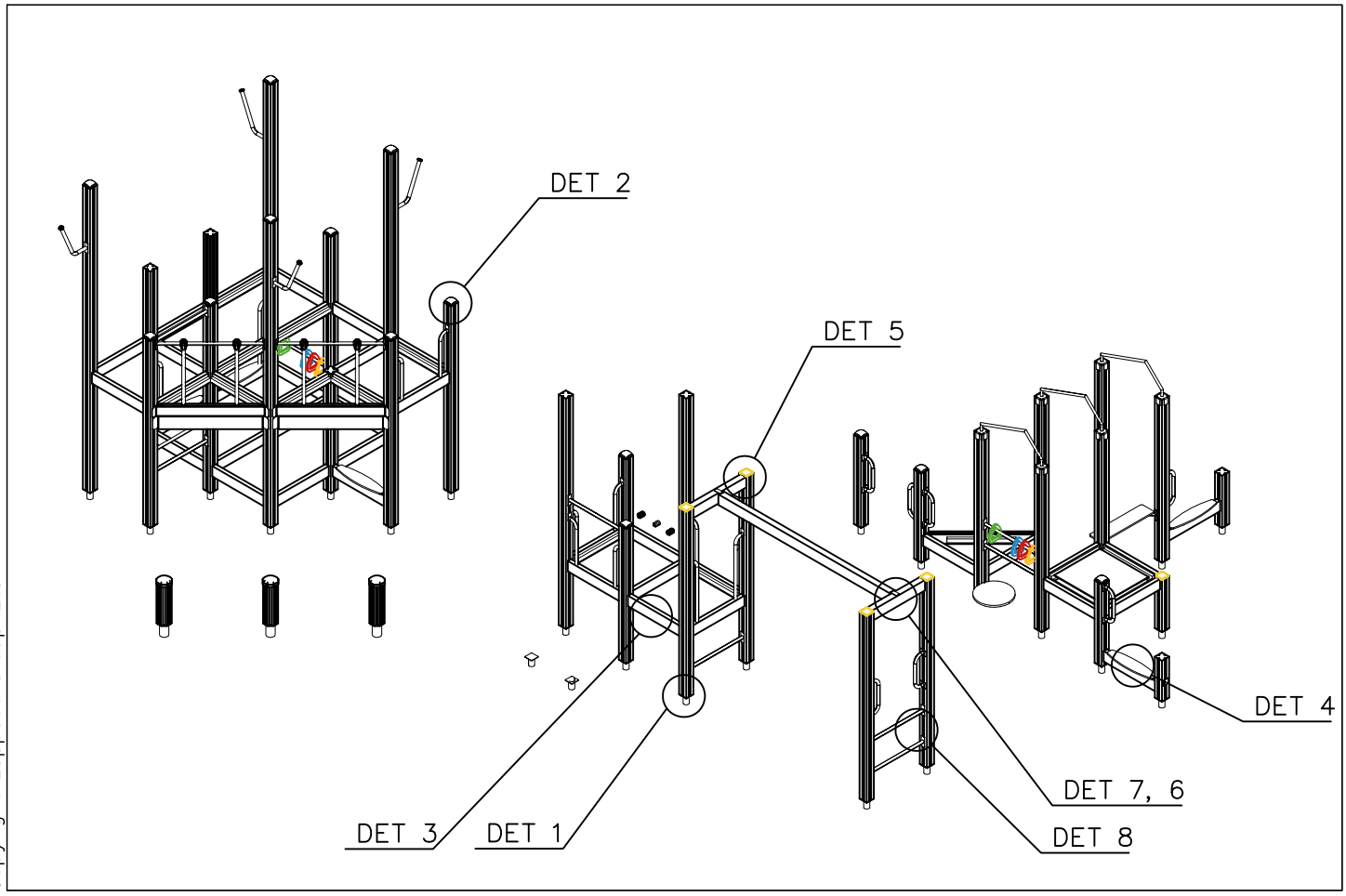

Copyright Lappset Group Ltd

LAPPSET®
FINNO

137603

DATE: 22.9.2020

6A

DET 1

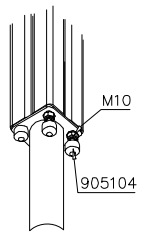

DET 2

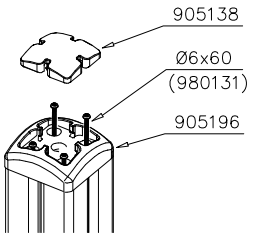

DET 3

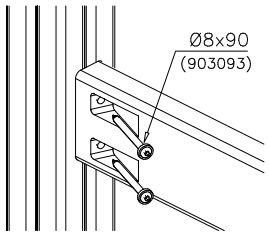

DET 4

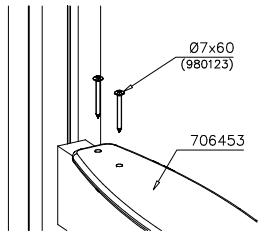

DET 5

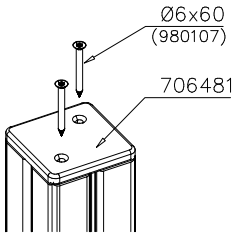

DET 6

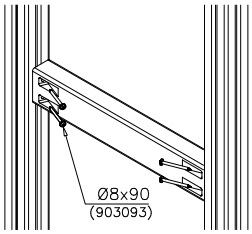

DET 7

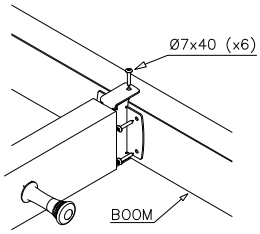

DET 8

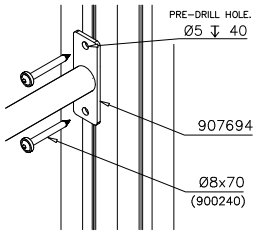

DET 9

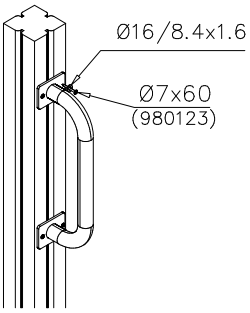

DET 10

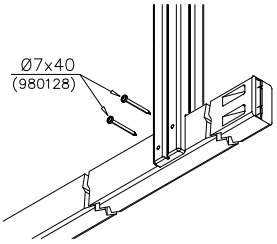

Copyright Lappset Group Ltd

LAPPSET®
FINNO

137603

TOWER A

DATE: 22.9.2020

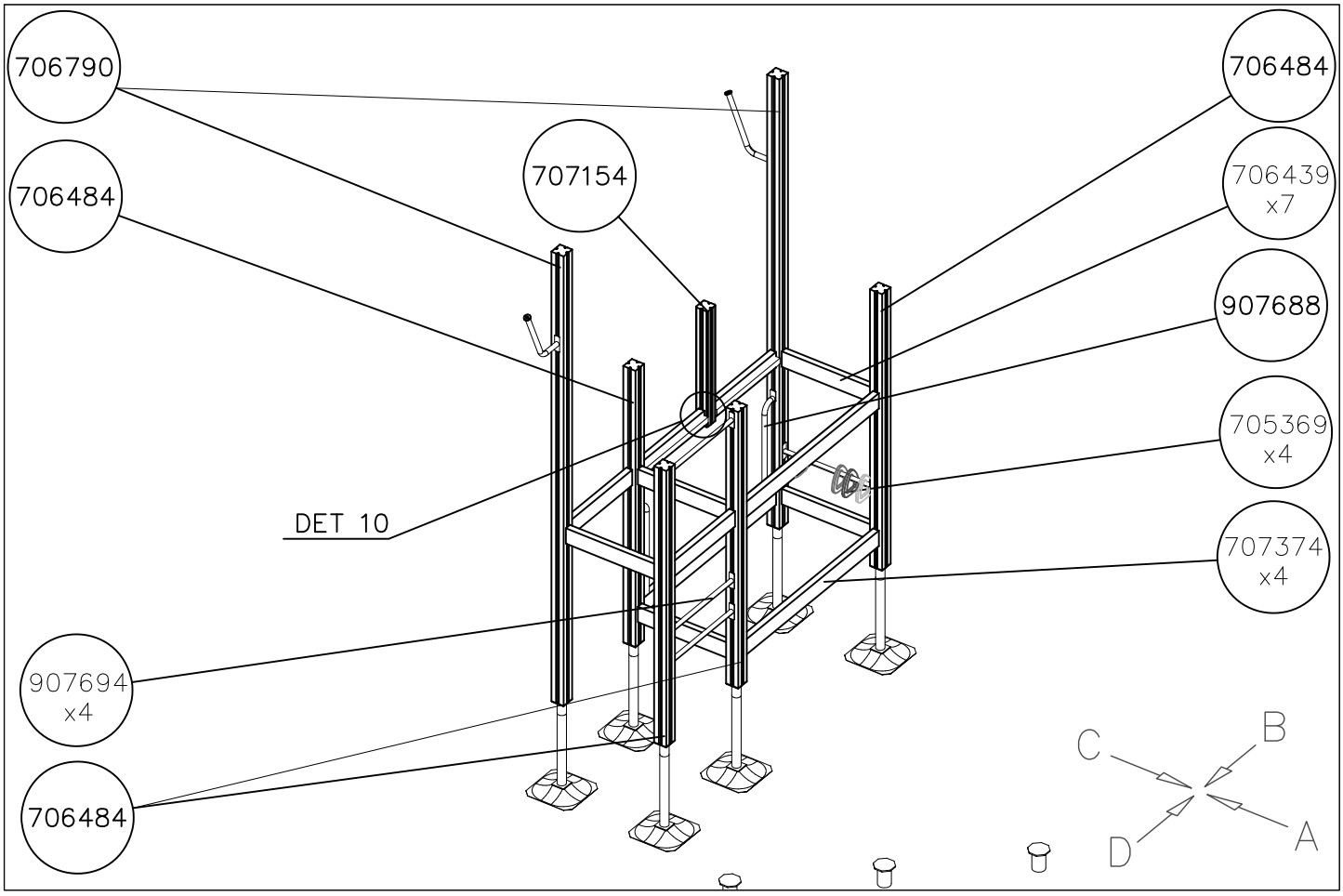

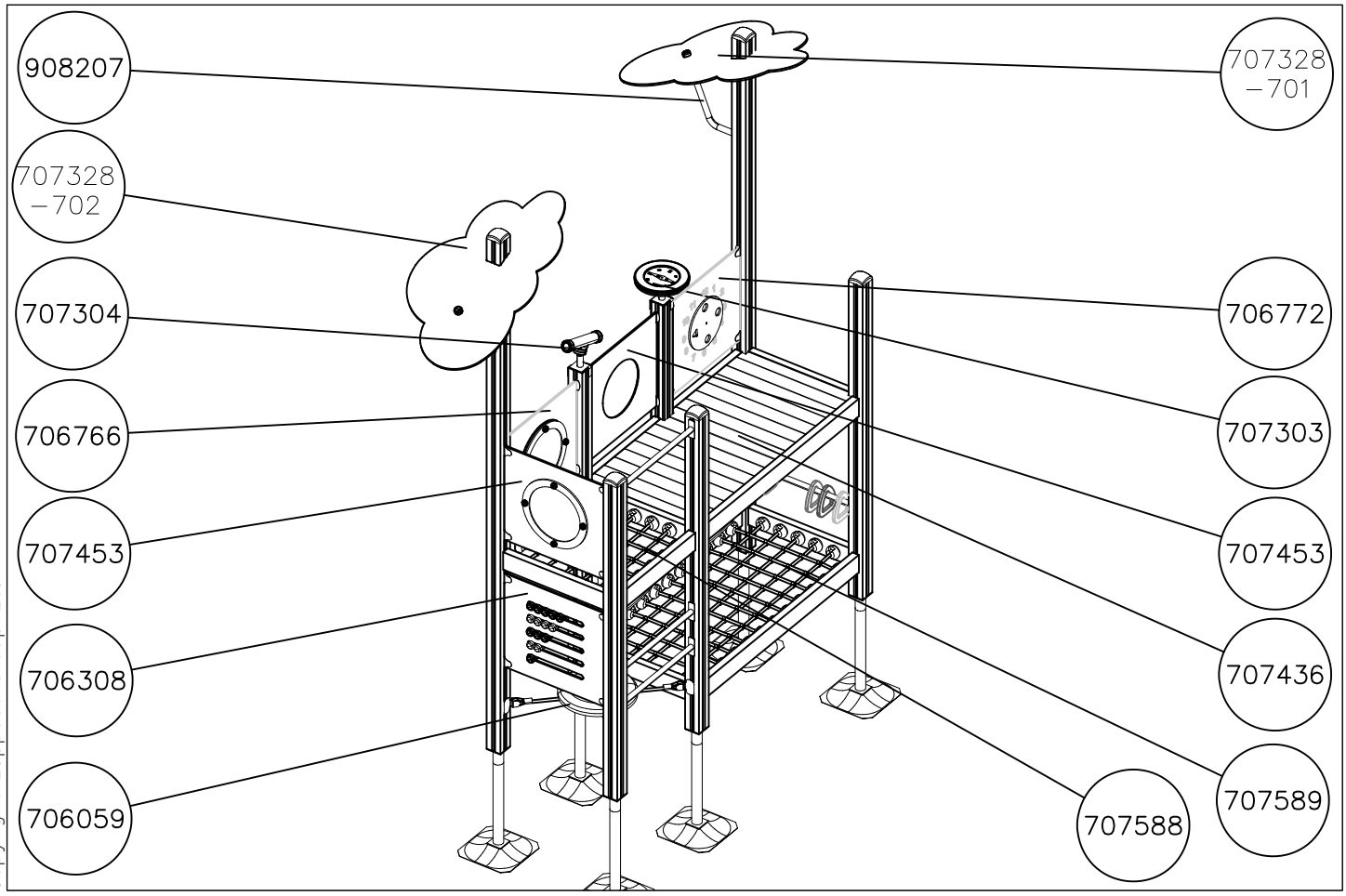

Copyright Lappset Group Ltd

LAPPSET®
FINNO

137603

TOWER A
7a

DATE: 1.9.2016

1:50

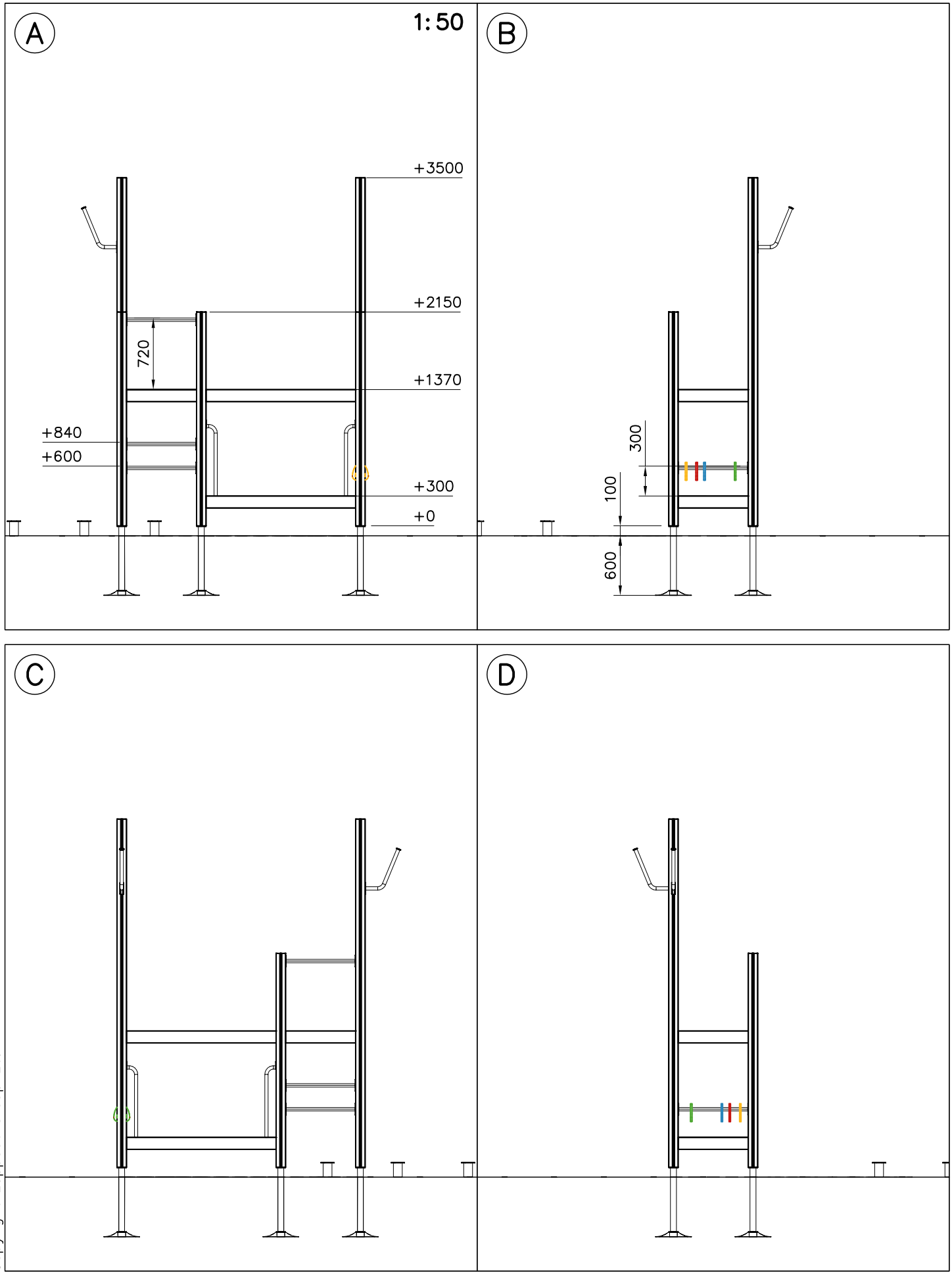

Copyright Lappset Group Ltd

LAPPSET®

FINNO

137603

DATE: 1.9.2016

TOWER B

7b

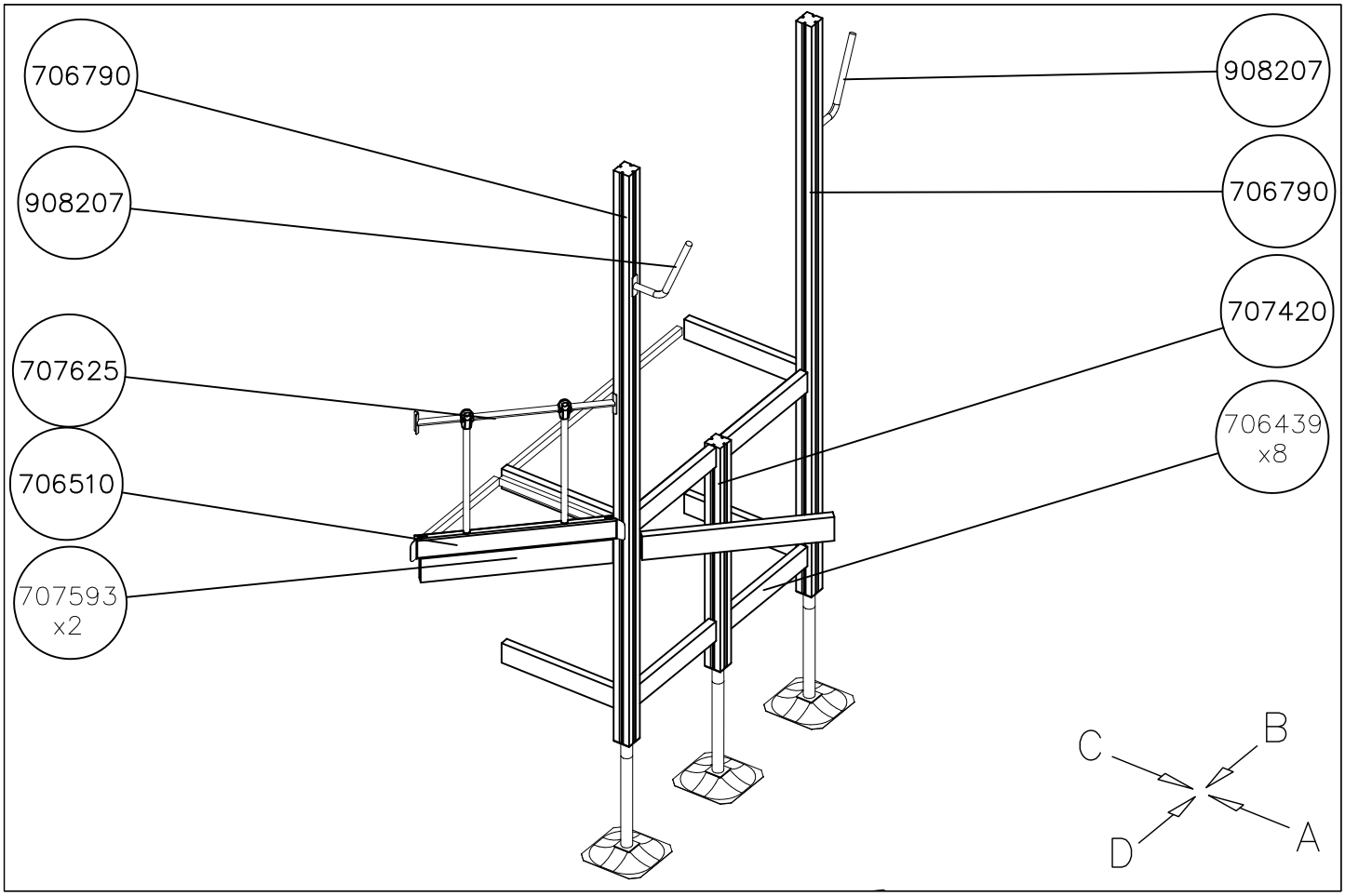

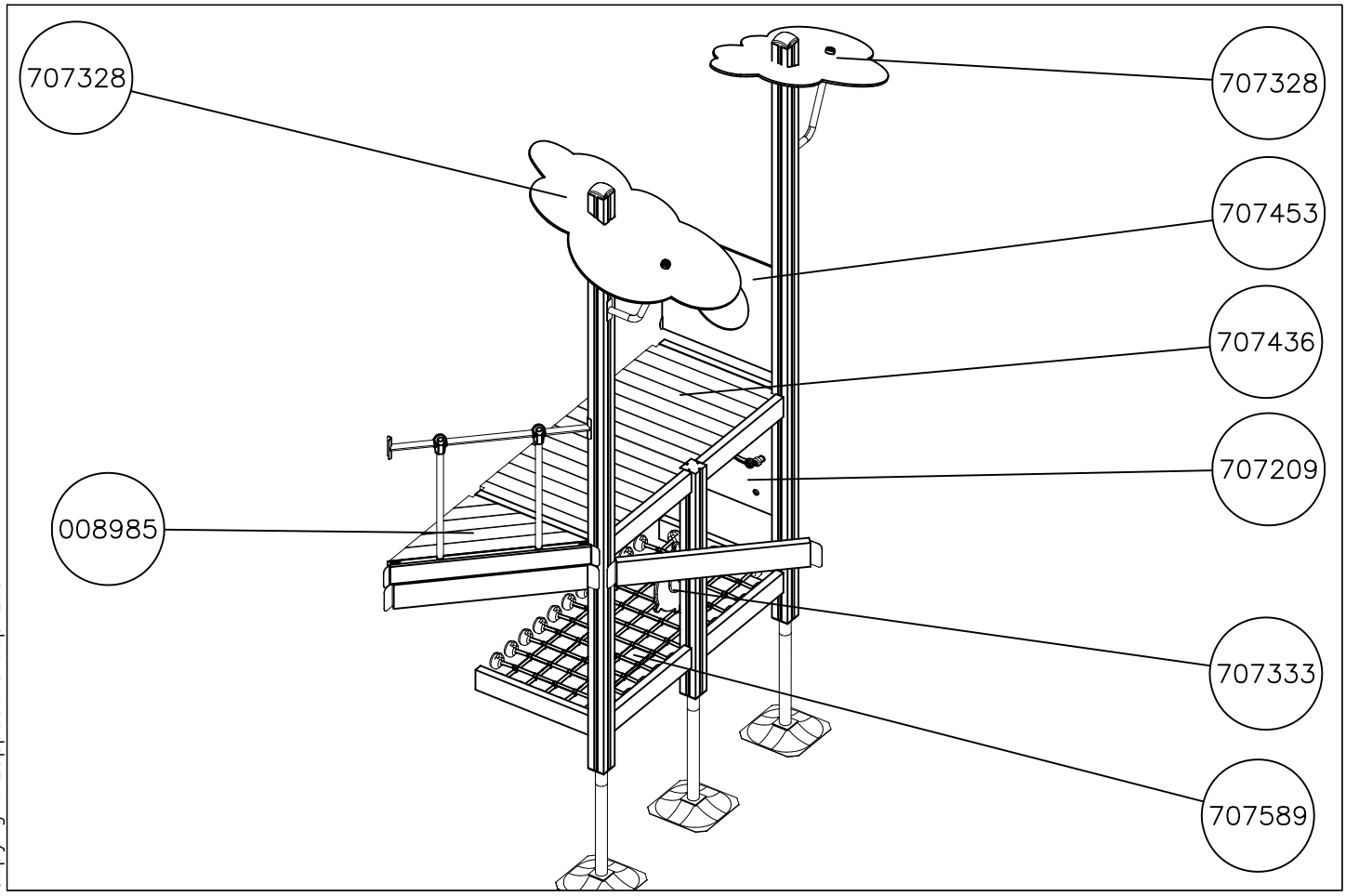

Copyright Lappset Group Ltd

LAPPSET®
FINNO

137603

TOWER B
7c

DATE: 1.9.2016

1:50

A

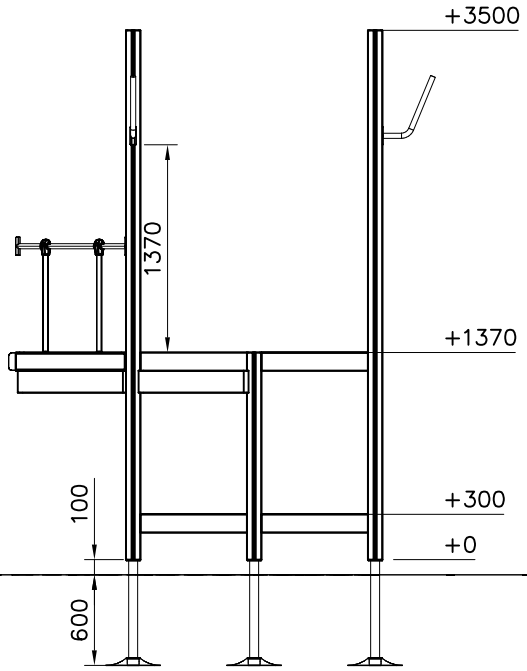

B

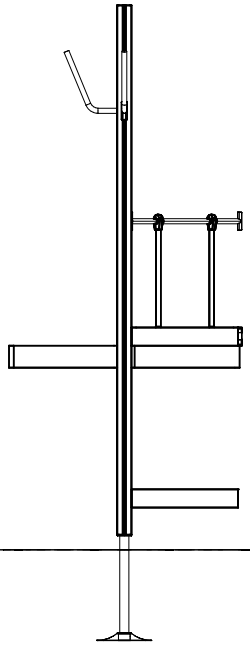

C

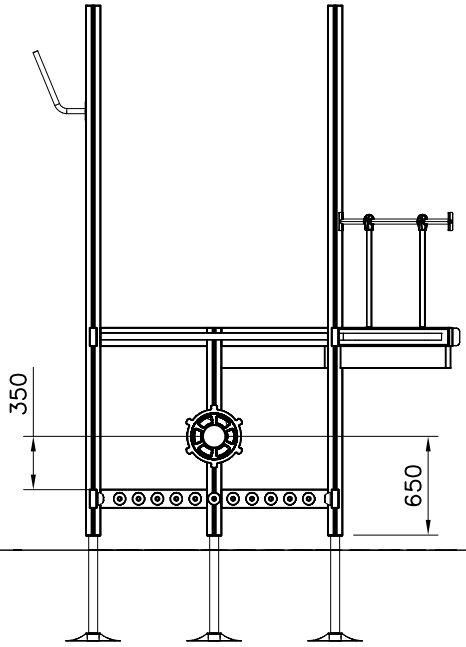

D

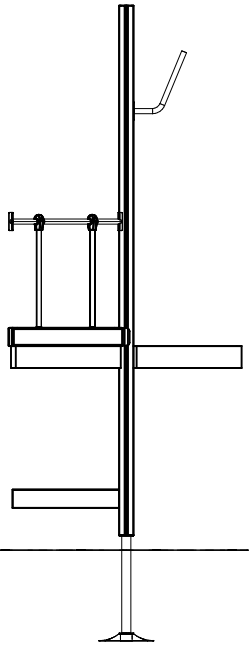

Copyright Lappset Group Ltd

LAPPSET®
FINNO

137603

TOWER C
7d

DATE: 1.9.2016

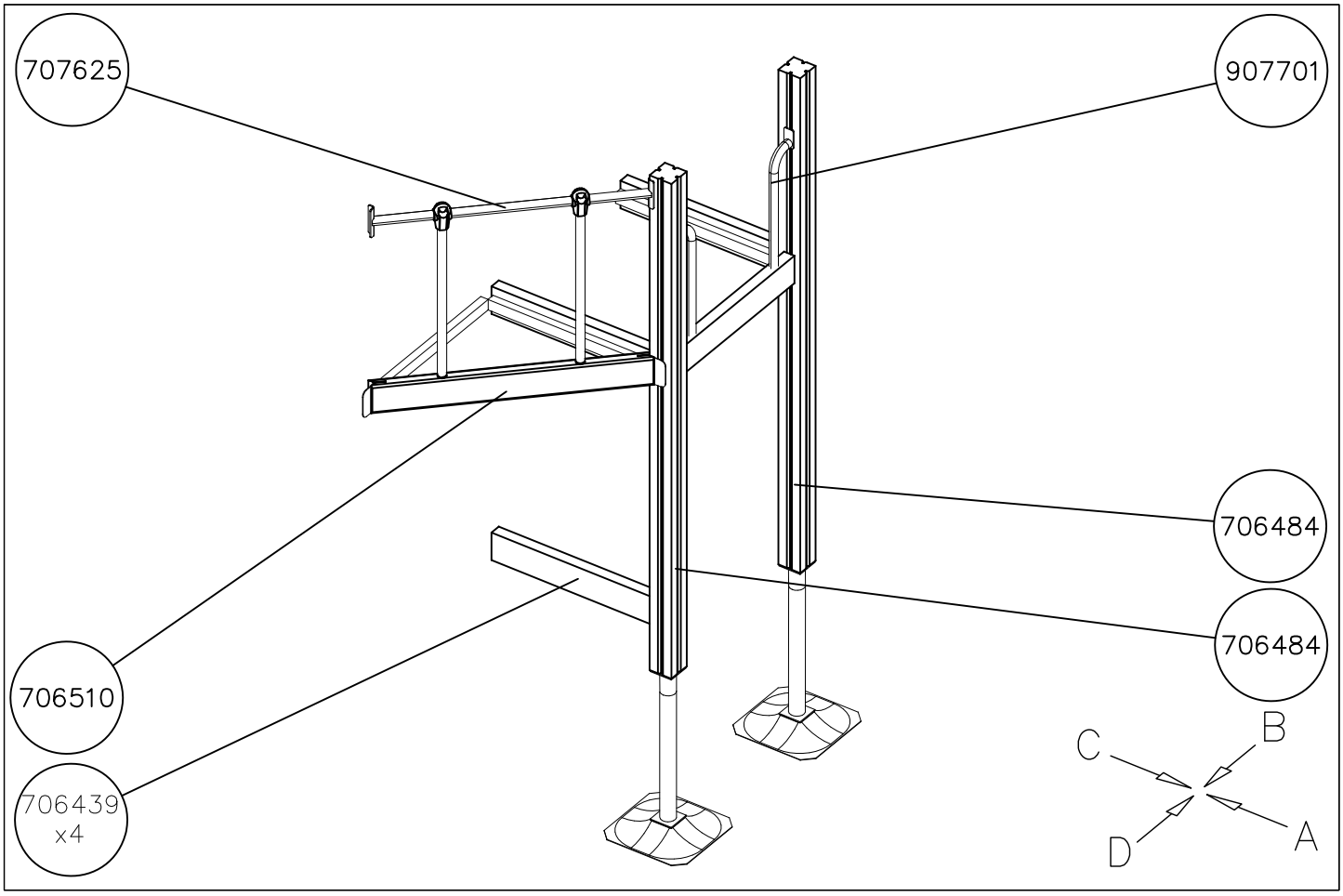

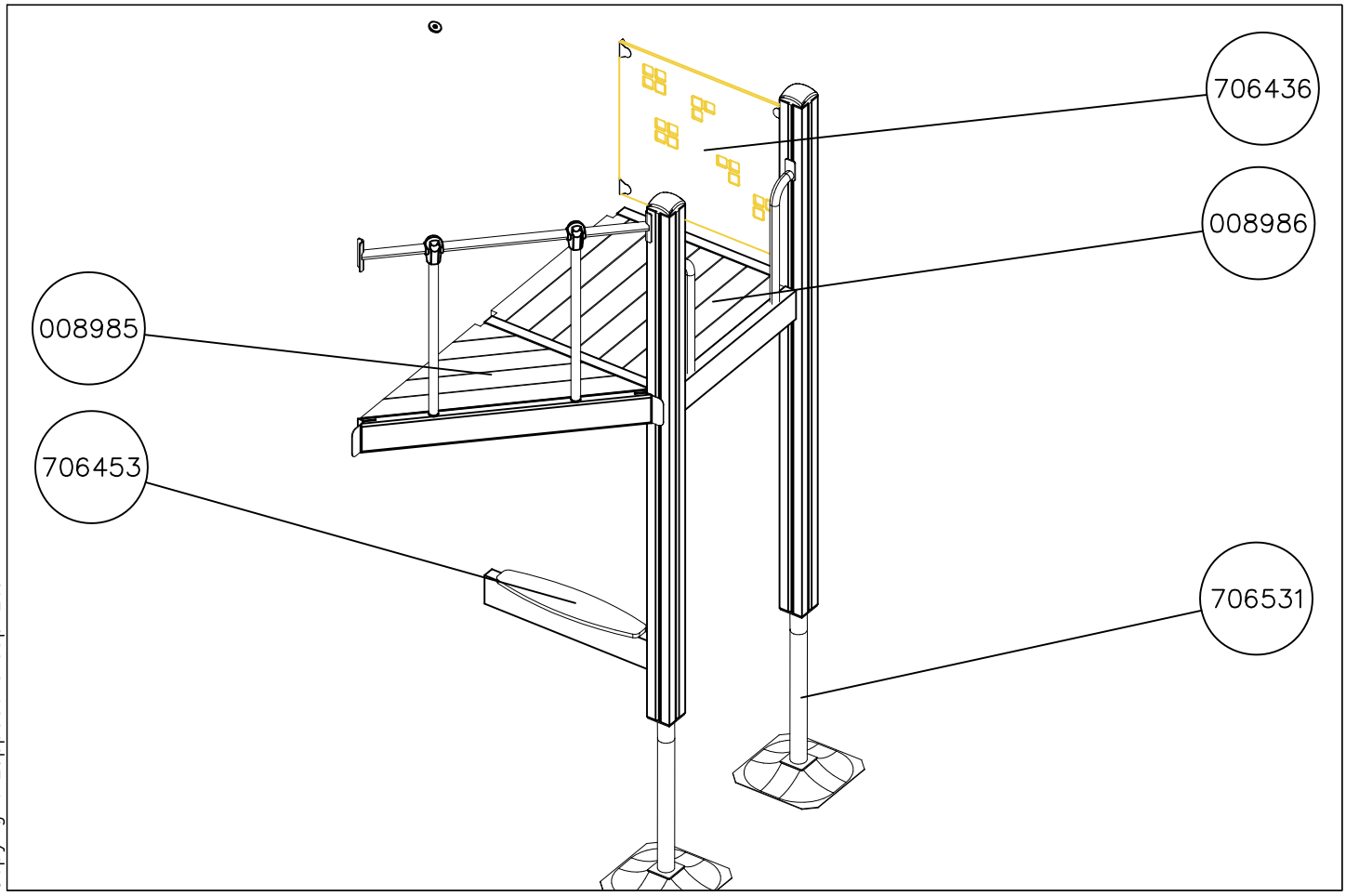

Copyright Lappset Group Ltd

LAPPSET®
FINNO

137603

TOWER C
7e

DATE: 1.9.2016

1:50

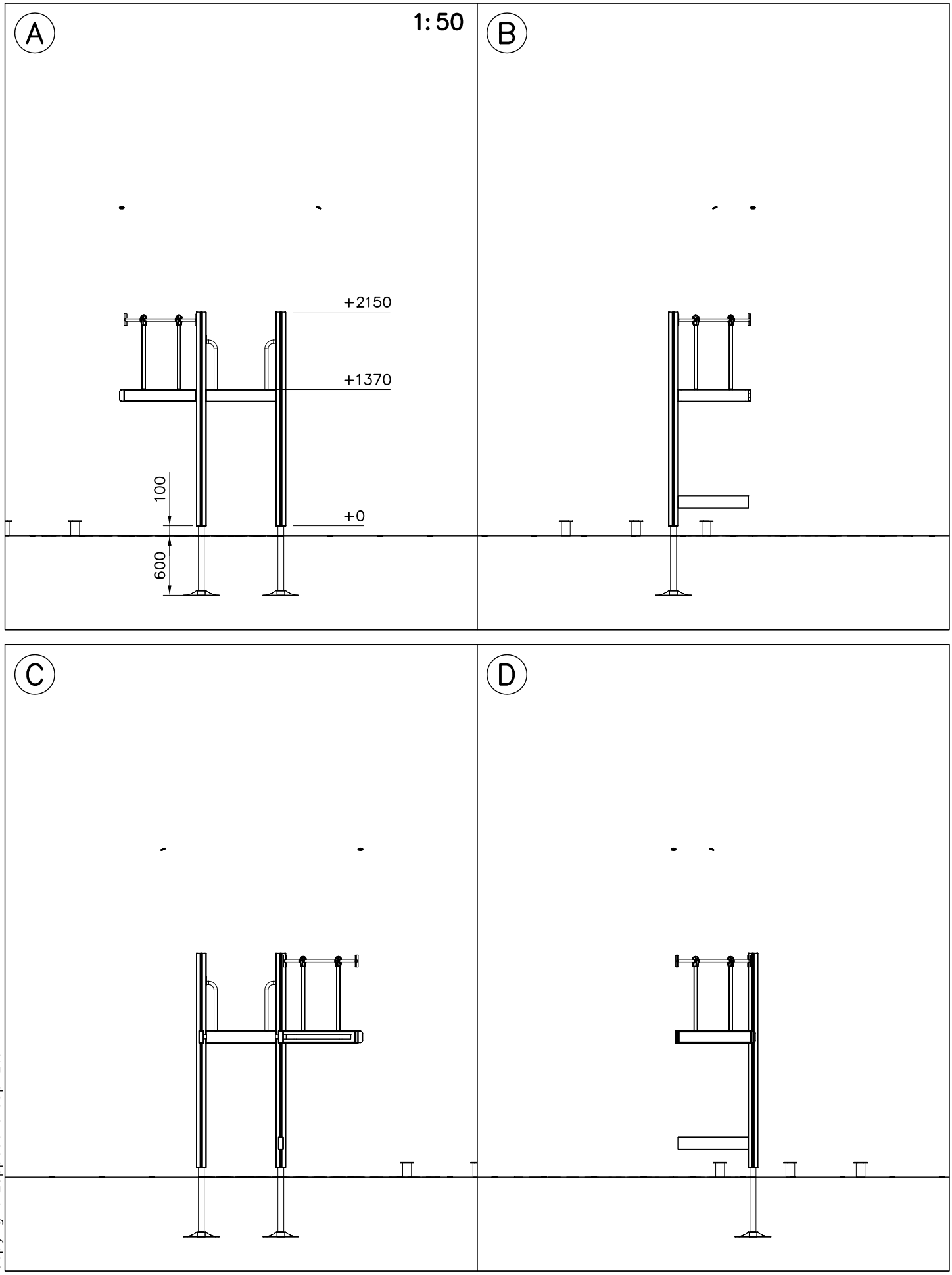

Copyright Lappset Group Ltd

LAPPSET®
FINNO

137603

TOWER D
7f

DATE: 1.9.2016

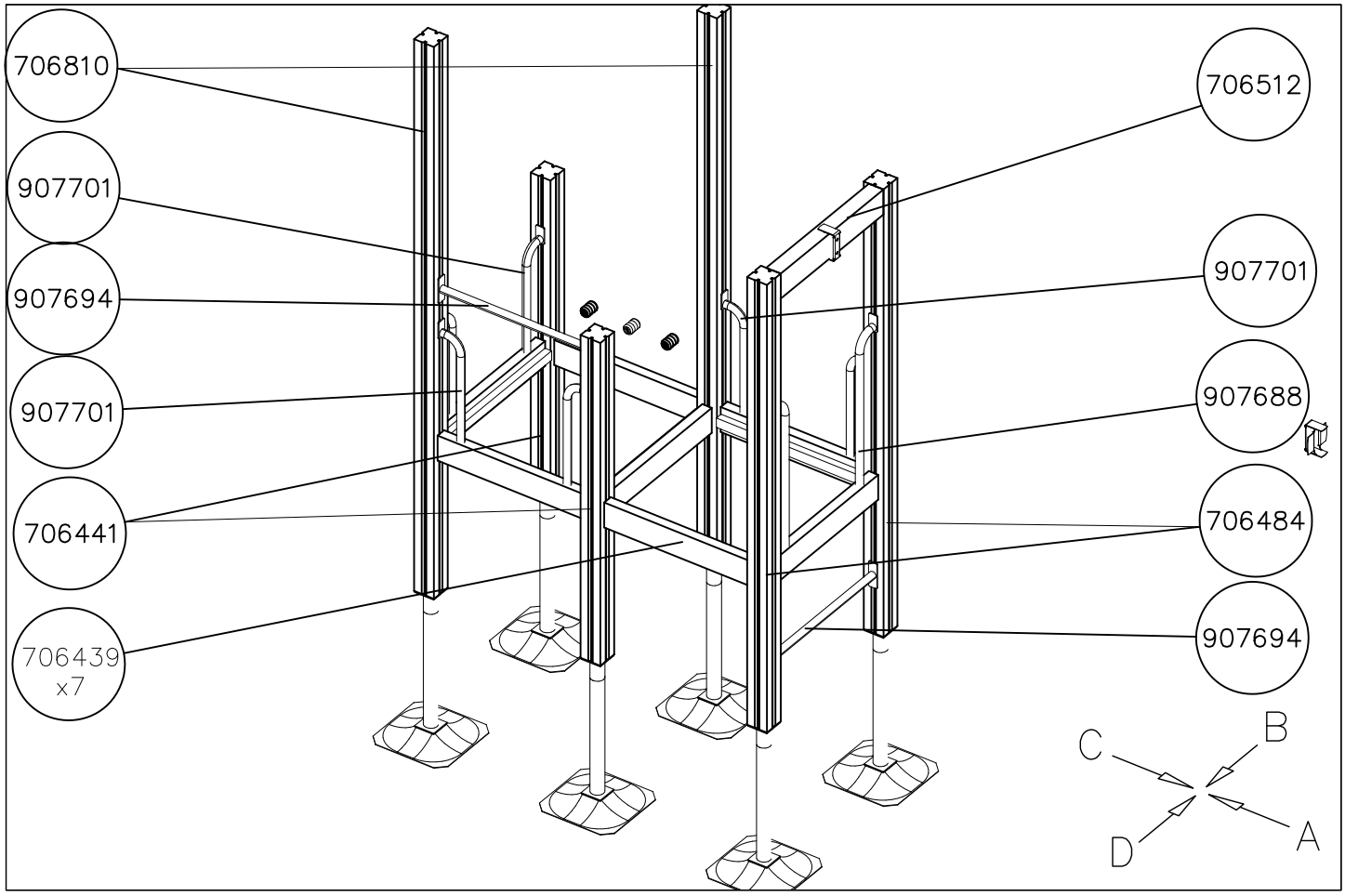

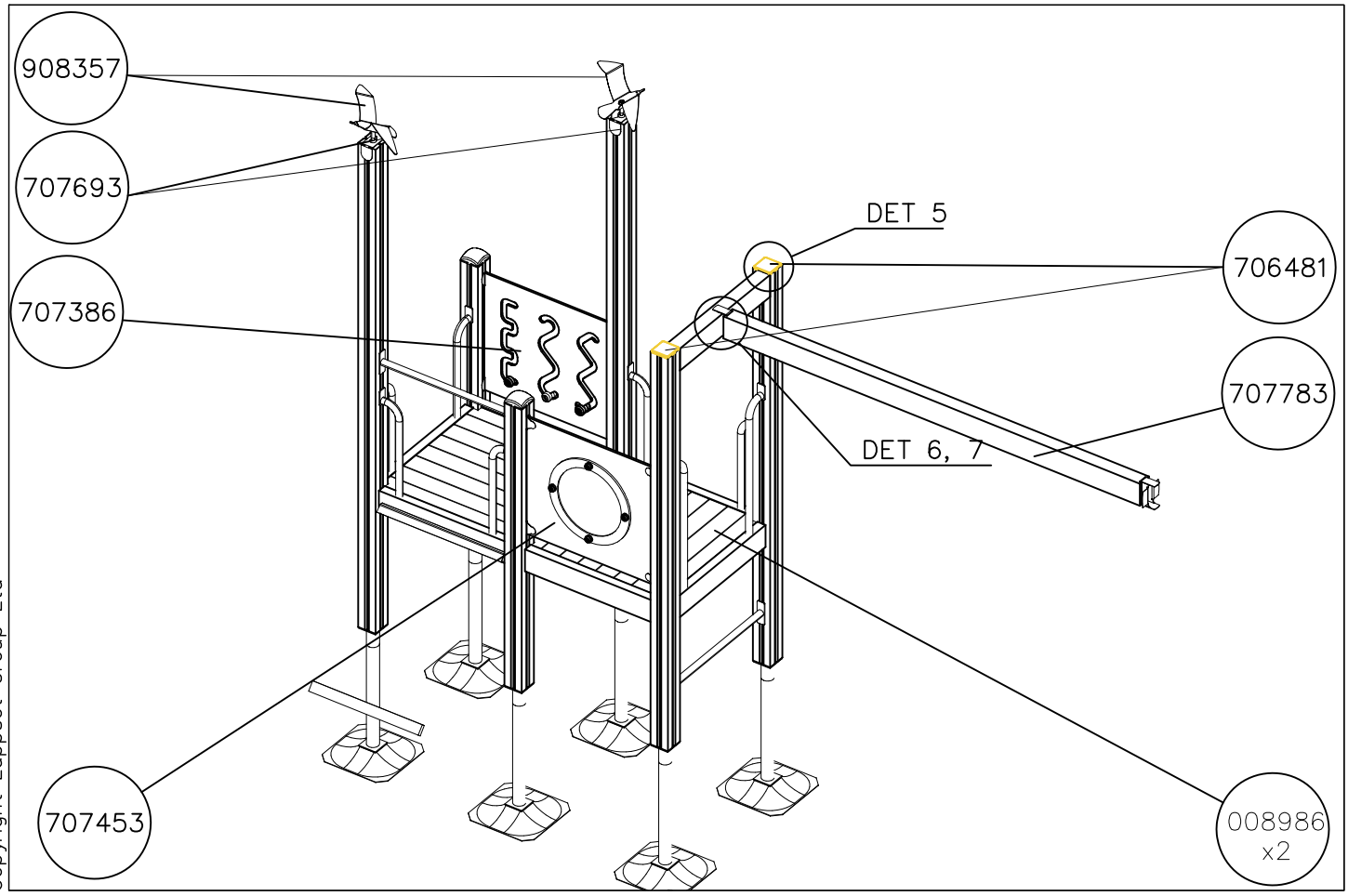

Copyright Lappset Group Ltd

LAPPSET®
FINNO

137603

TOWER D
7g

DATE: 1.9.2016

1:50

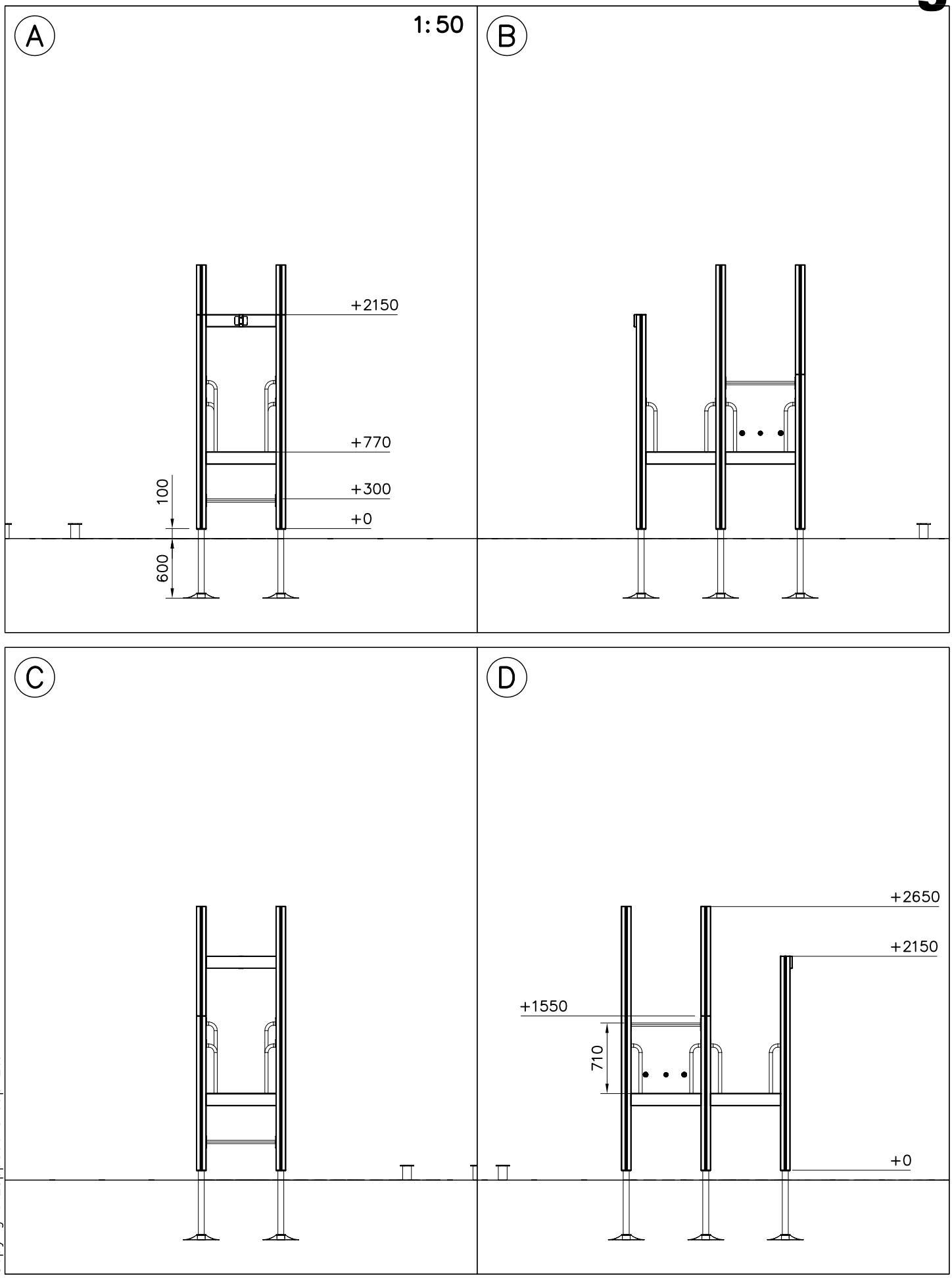

Copyright Lappset Group Ltd

LAPPSET®
FINNO

137603

TOWER E
7h

DATE: 1.9.2016

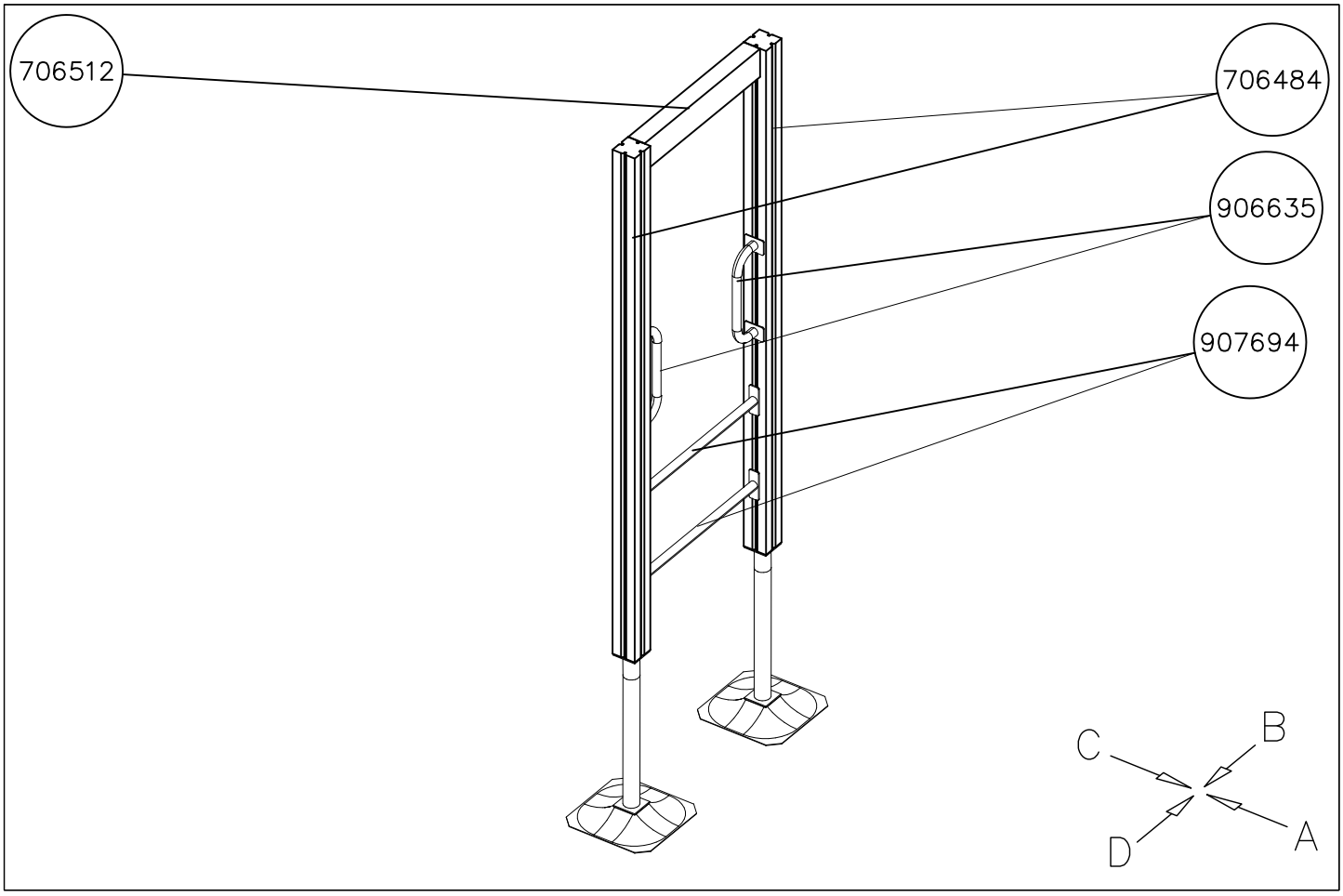

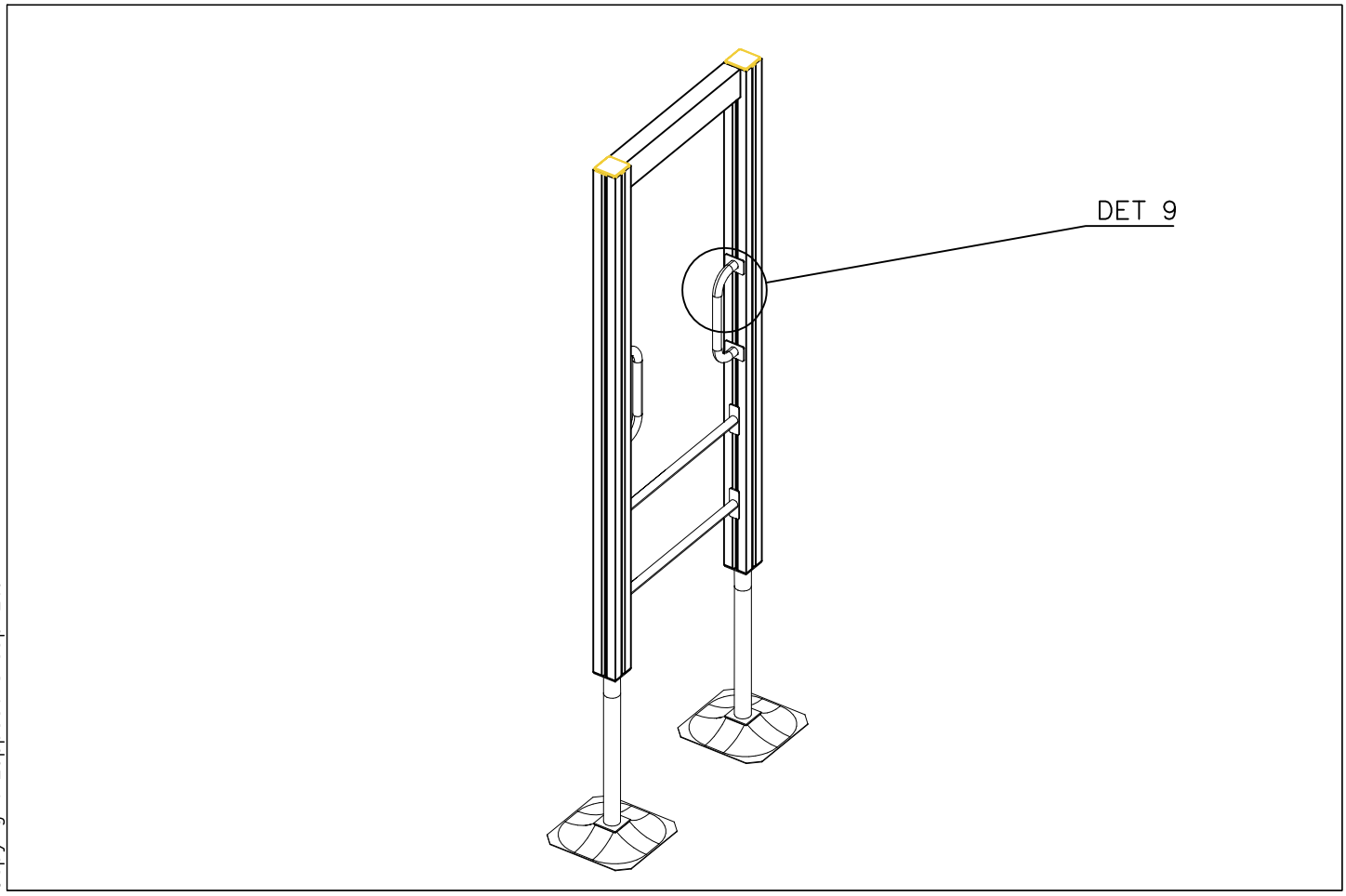

Copyright Lappset Group Ltd

LAPPSET®
FINNO

137603

TOWER E 7i

DATE: 1.9.2016

1:50

A

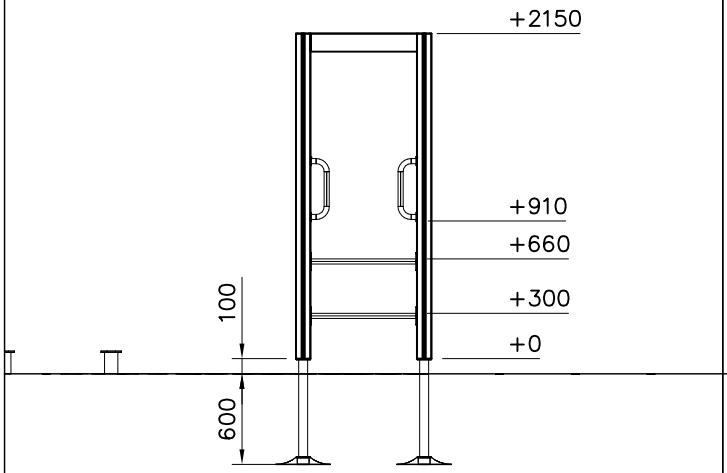

B

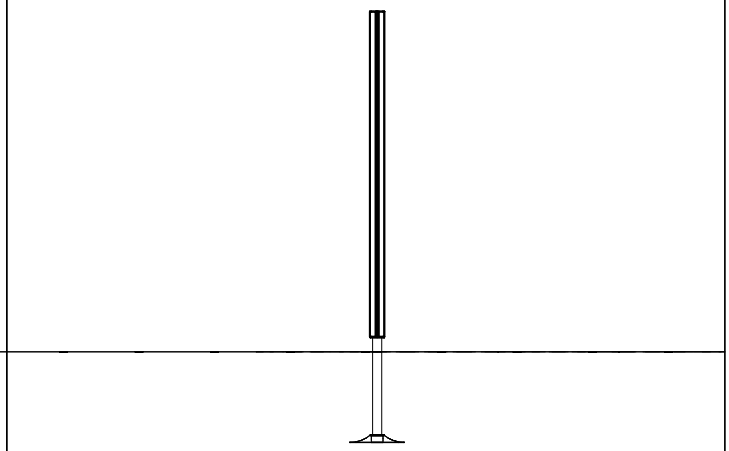

C

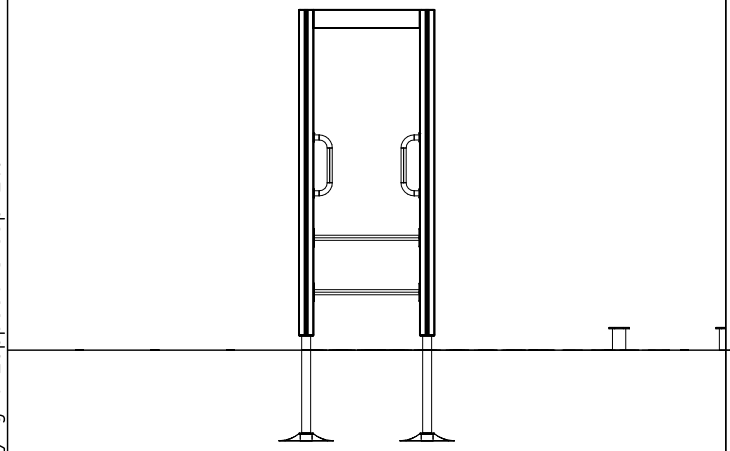

D

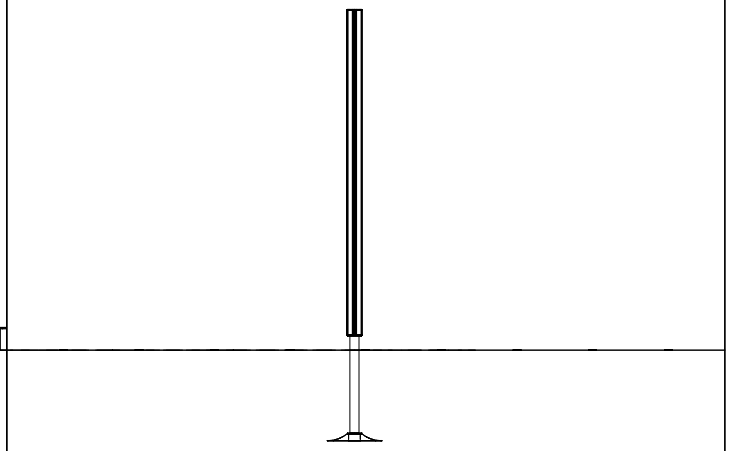

Copyright Lappset Group Ltd

LAPPSET®
FINNO

137603

TOWER F
7j

DATE: 1.9.2016

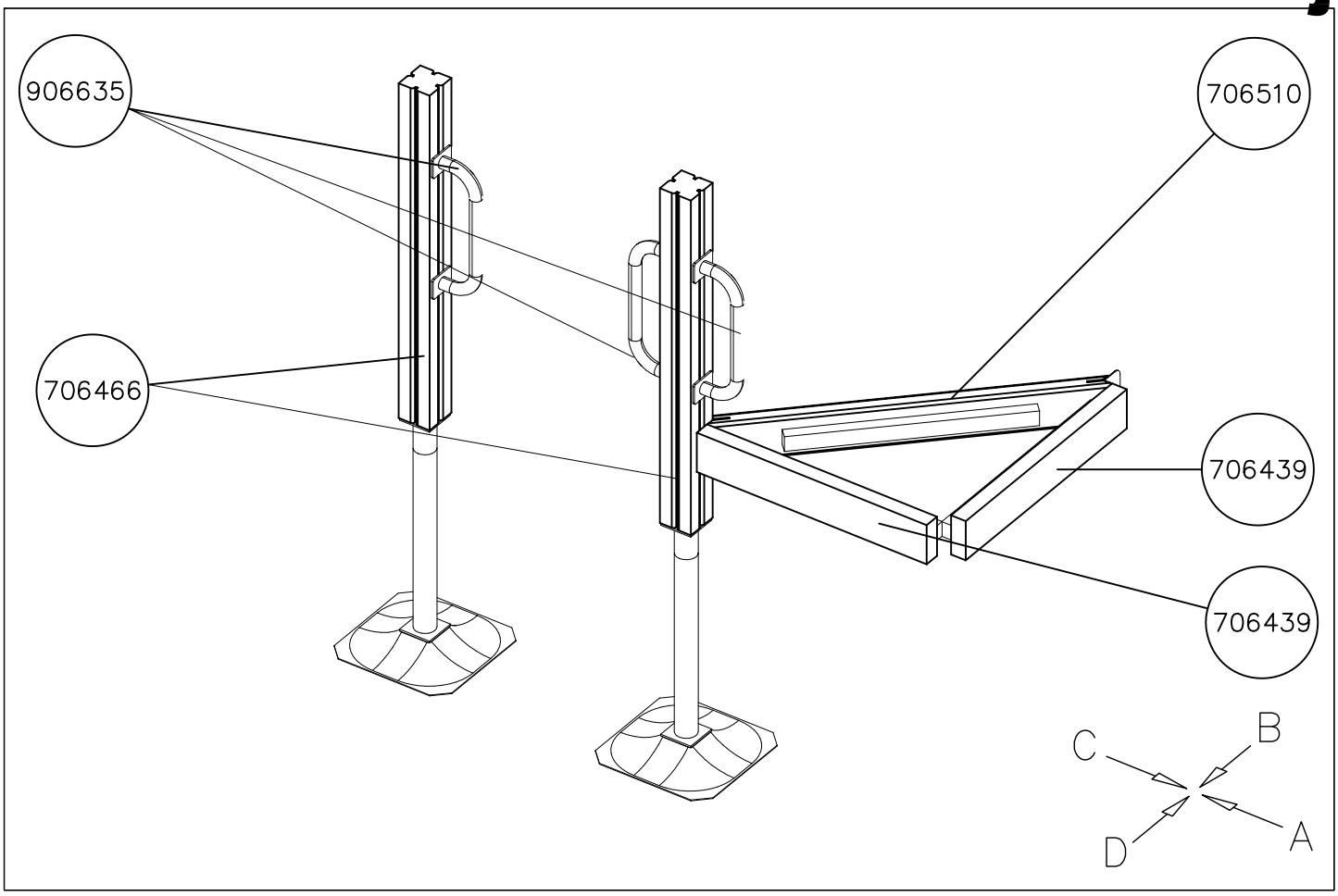

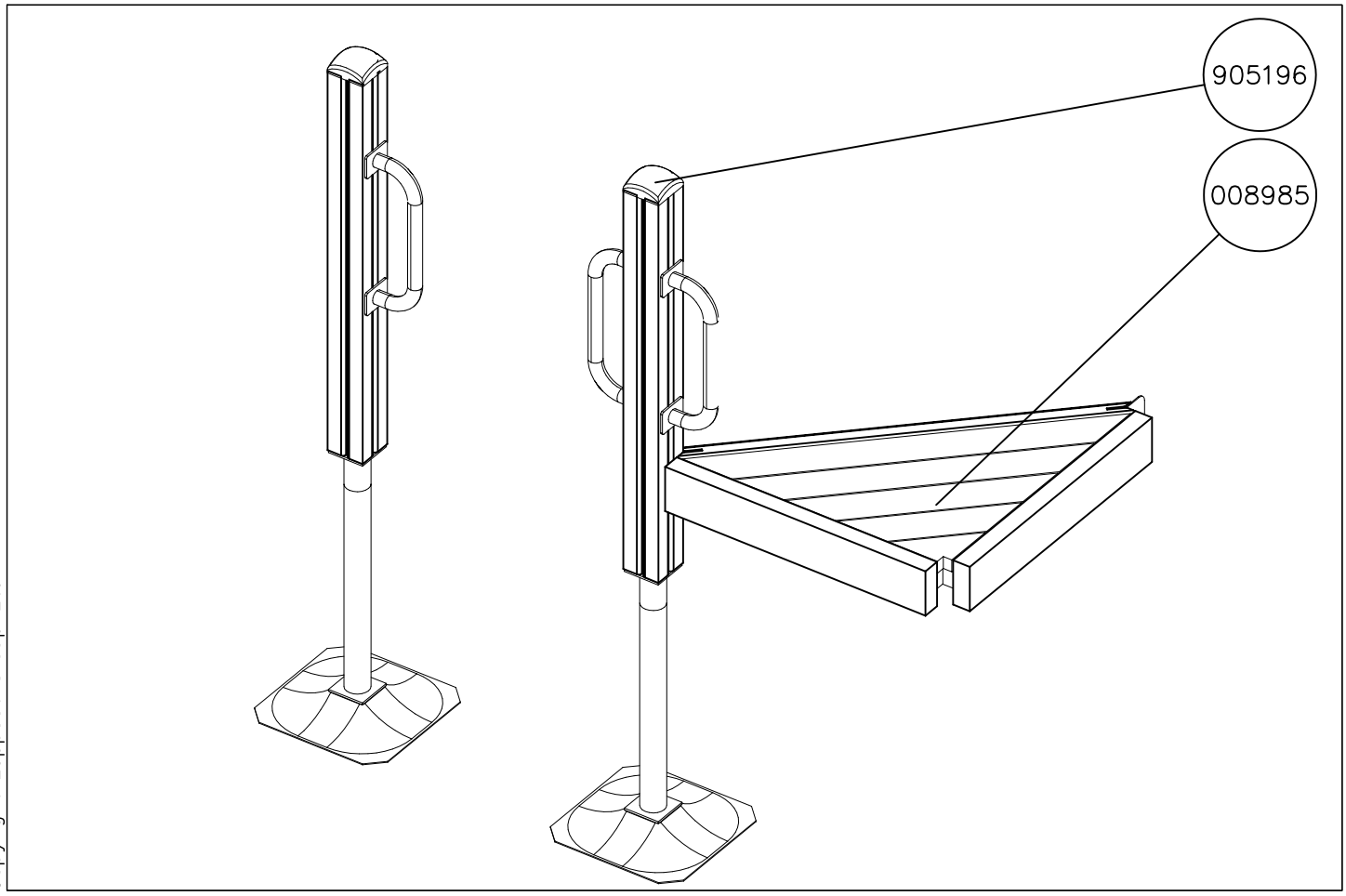

Copyright Lappset Group Ltd

LAPPSET®
FINNO

137603

TOWER F
7k

DATE: 1.9.2016

1:50

A

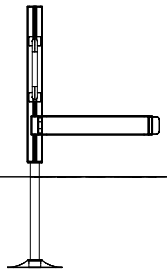

B

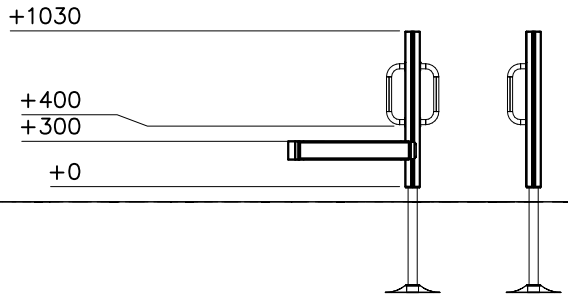

C

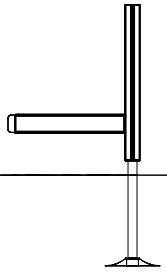

D

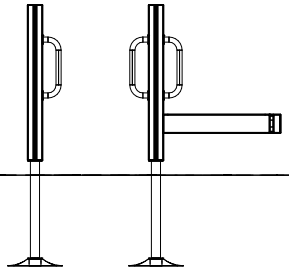

Copyright Lappset Group Ltd

LAPPSET®
FINNO

137603

TOWER G
7I

DATE: 1.9.2016

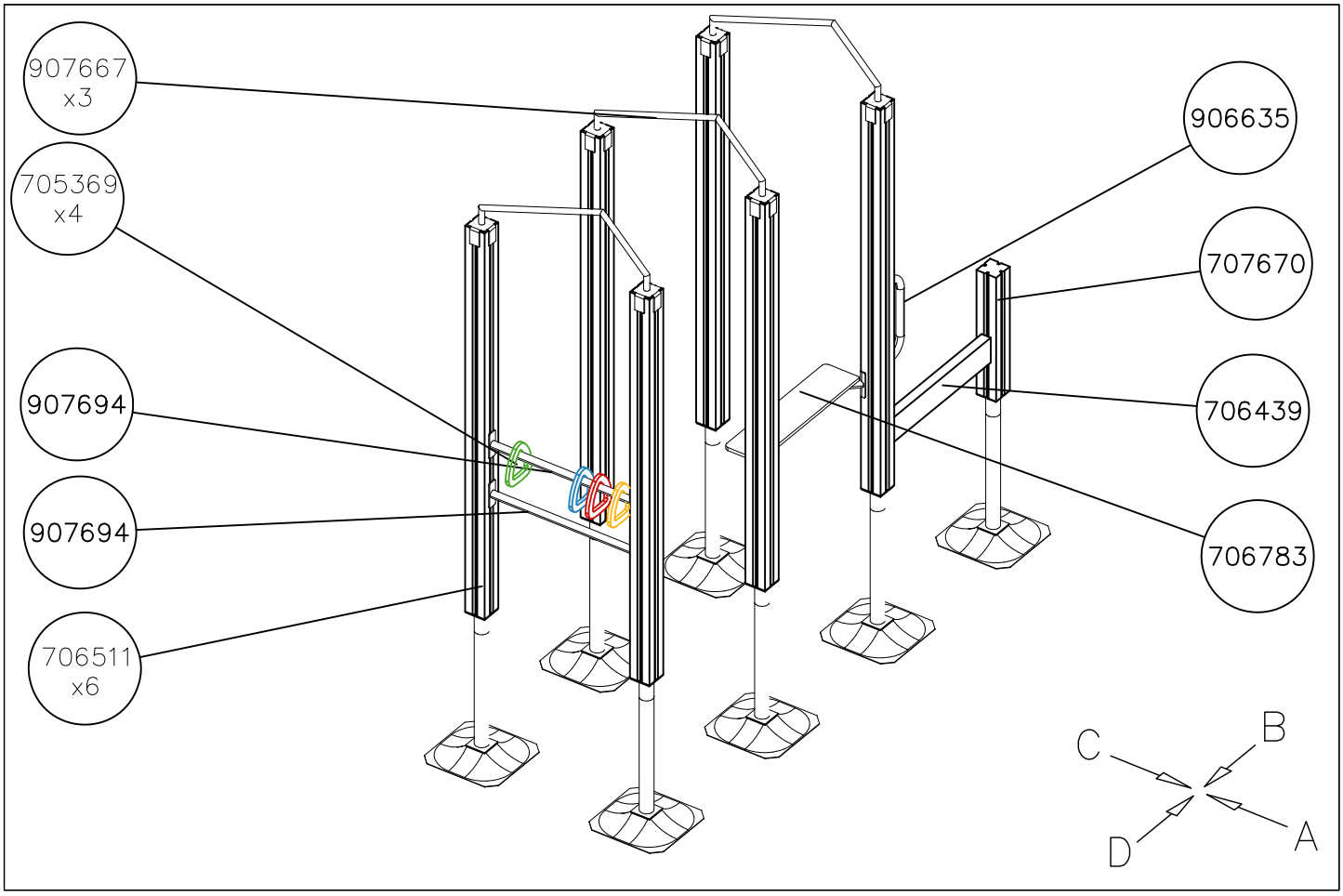

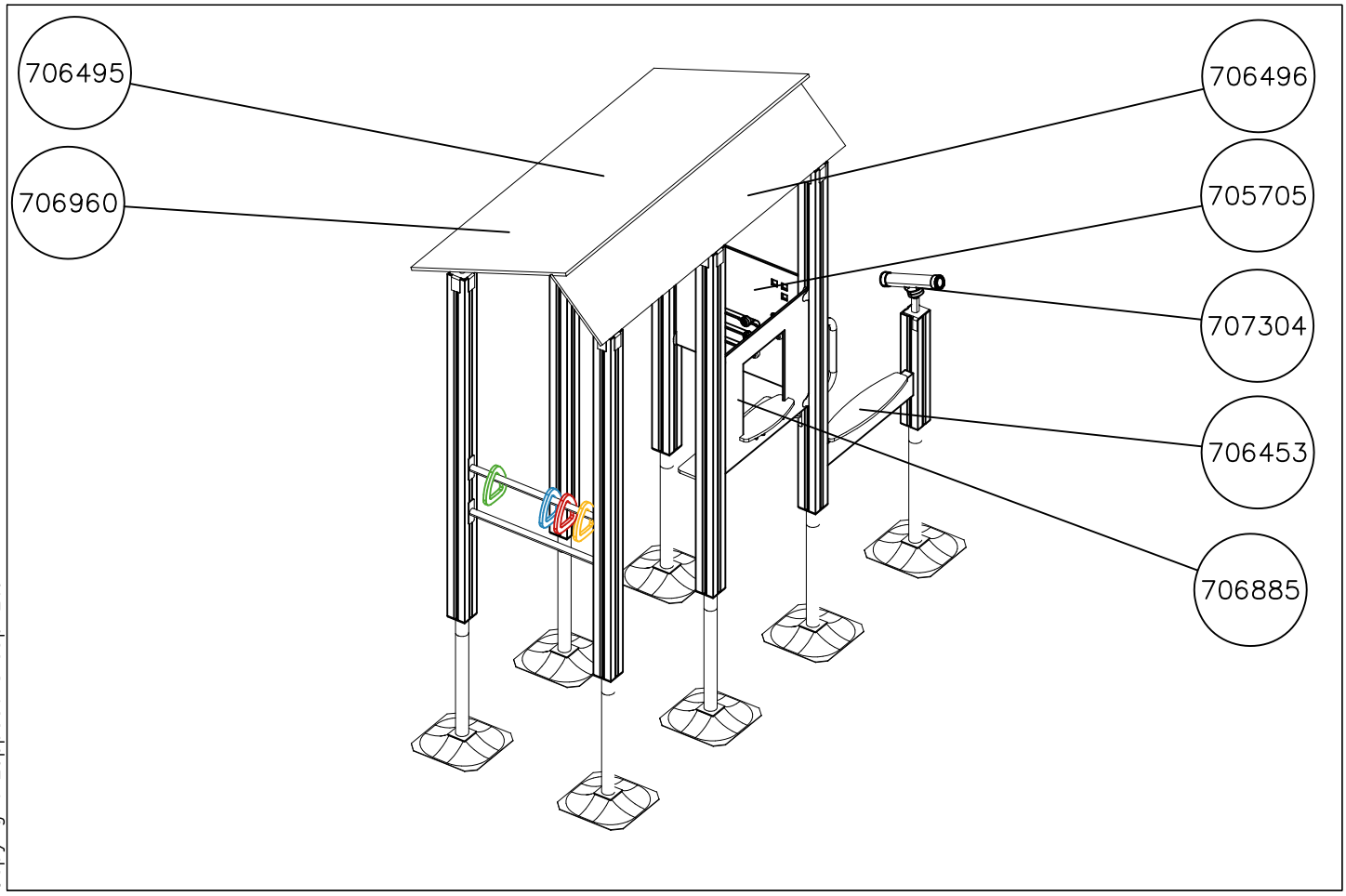

Copyright Lappset Group Ltd

LAPPSET®
FINNO

137603

TOWER G
7m

DATE: 1.9.2016

1:50

A

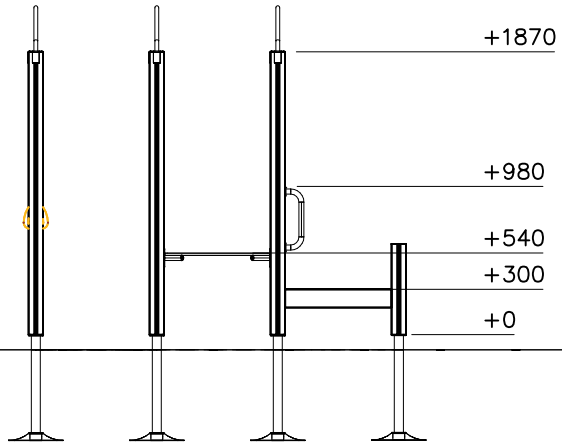

B

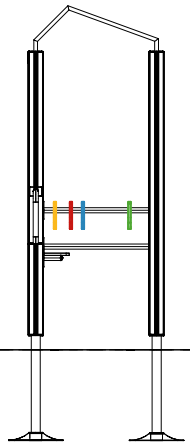

C

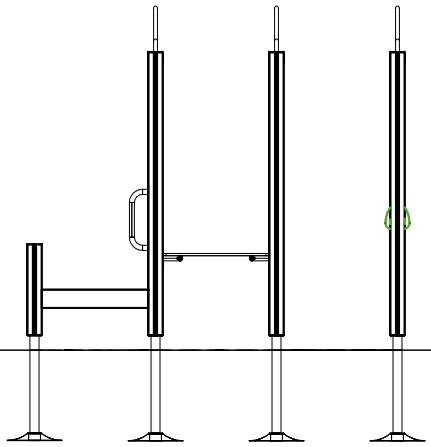

D

Copyright Lappset Group Ltd

LAPPSET®
FINNO

137603

TOWER H
7n

DATE: 1.9.2016

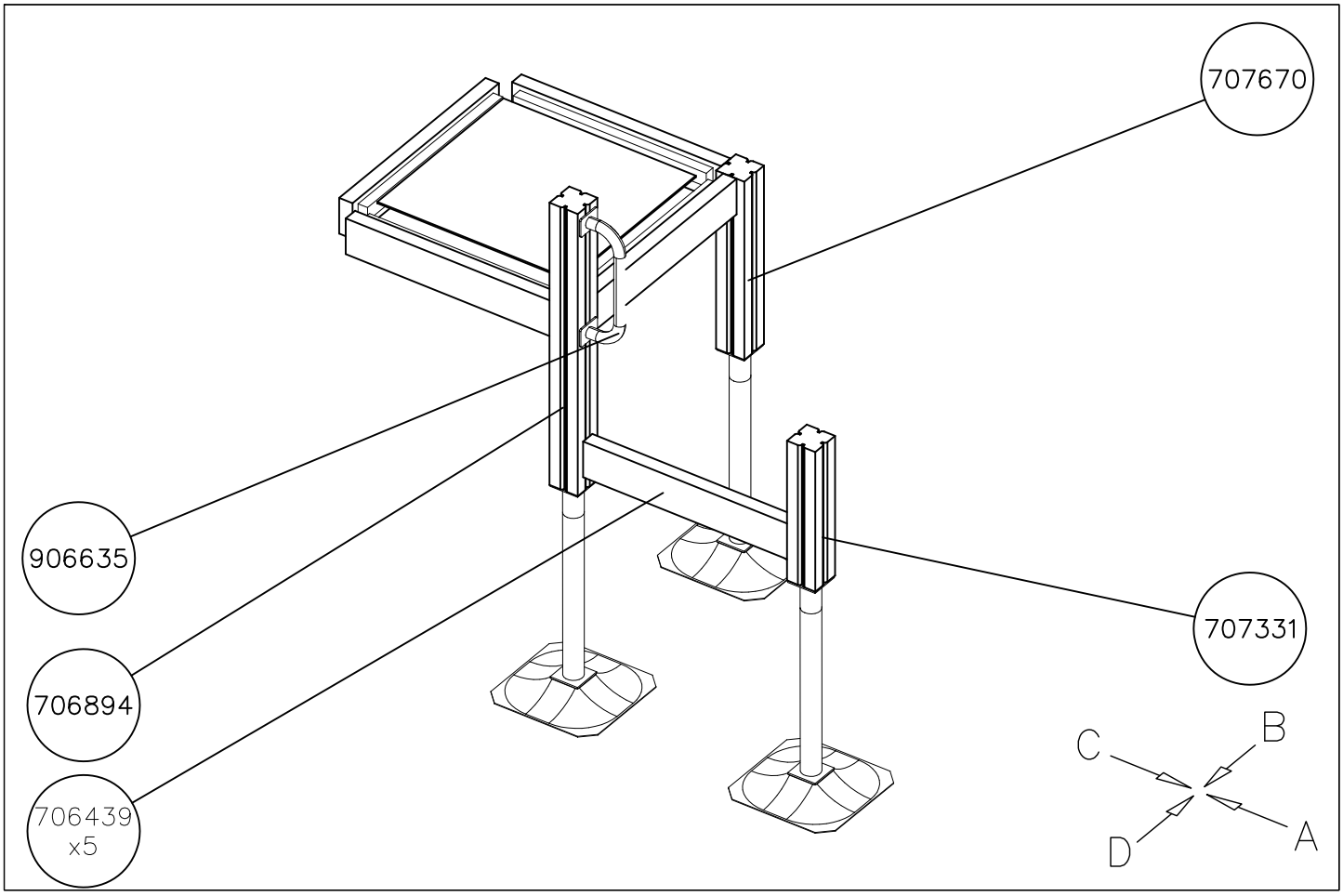

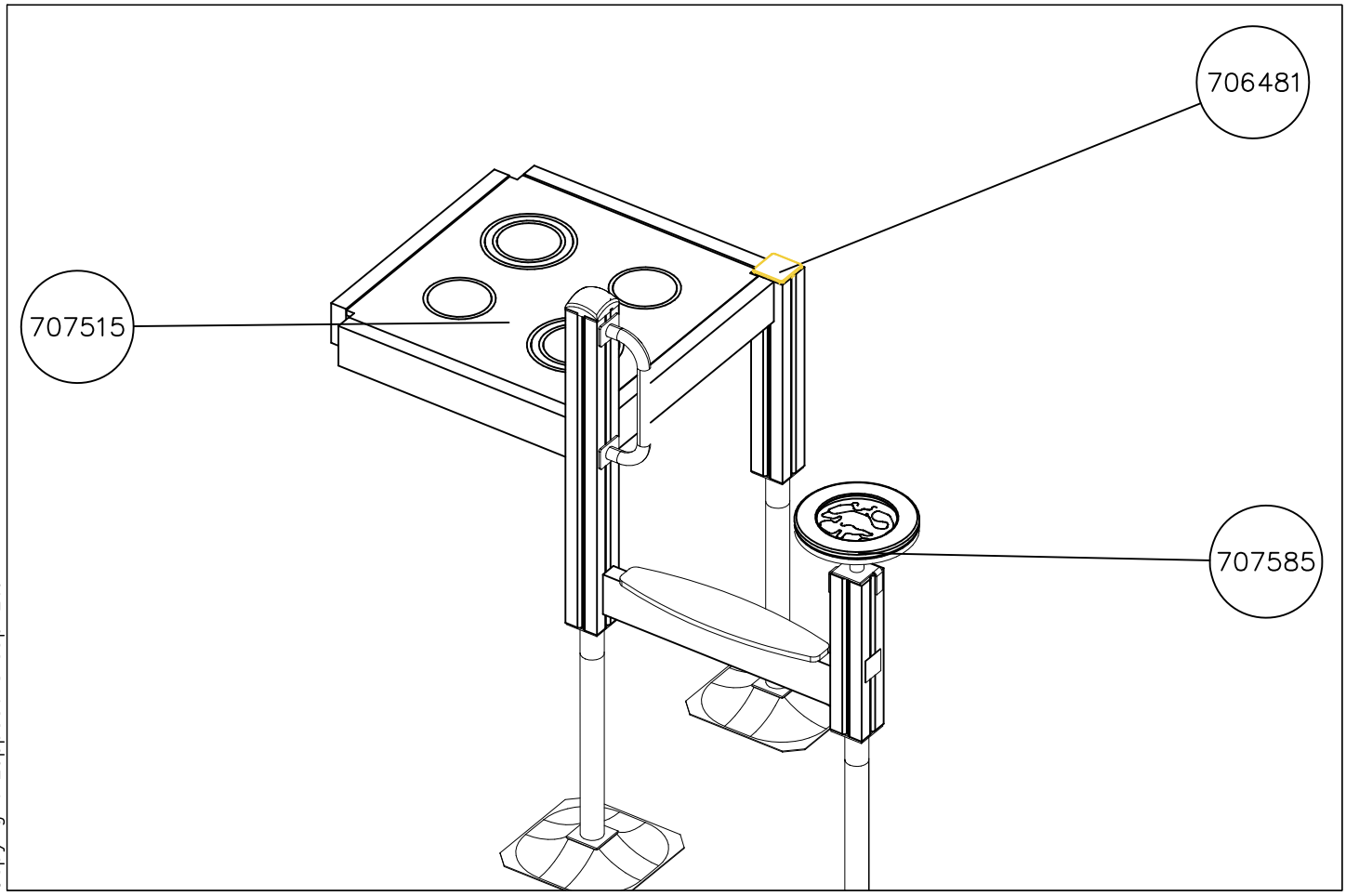

Copyright Lappset Group Ltd

LAPPSET®
FINNO

137603

TOWER H
7o

DATE: 1.9.2016

1:50

A

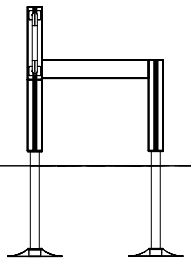

B

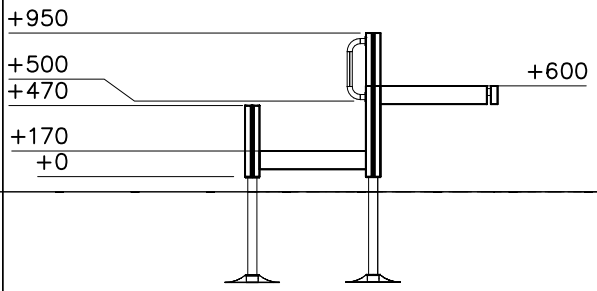

C

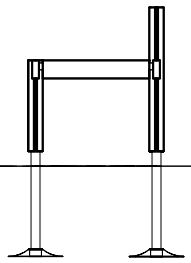

D

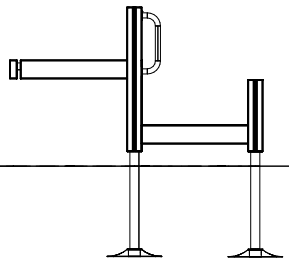

Copyright Lappset Group Ltd

LAPPSET®
FINNO

137603

DATE: 1.9.2016

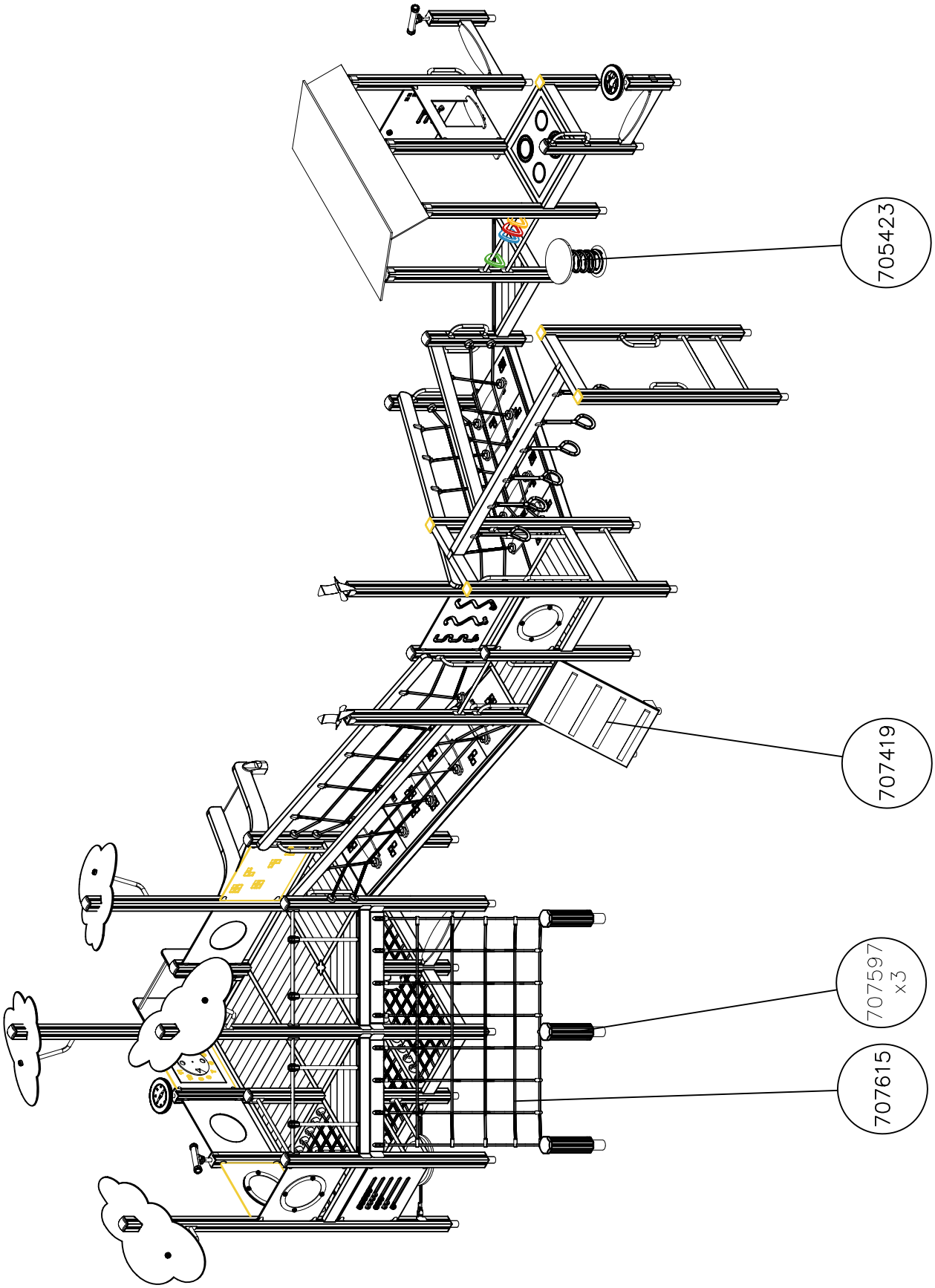

Copyright Lappset Group Ltd

LAPPSET®
FINNO

137603

DATE: 1.9.2016

8a

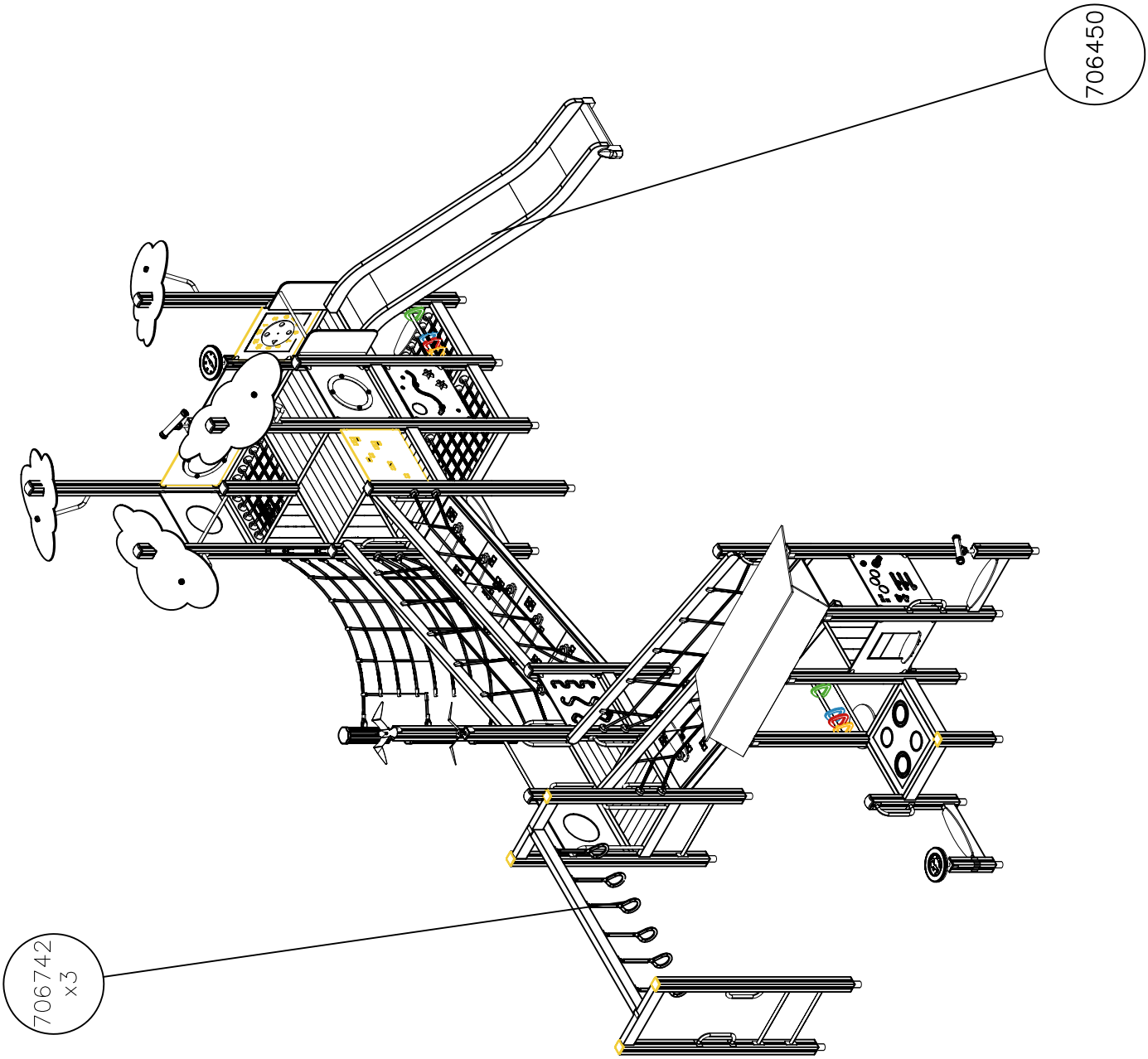

Copyright Lappset Group Ltd

LAPPSET®
FINNO

137603

DATE: 1.9.2016

8b

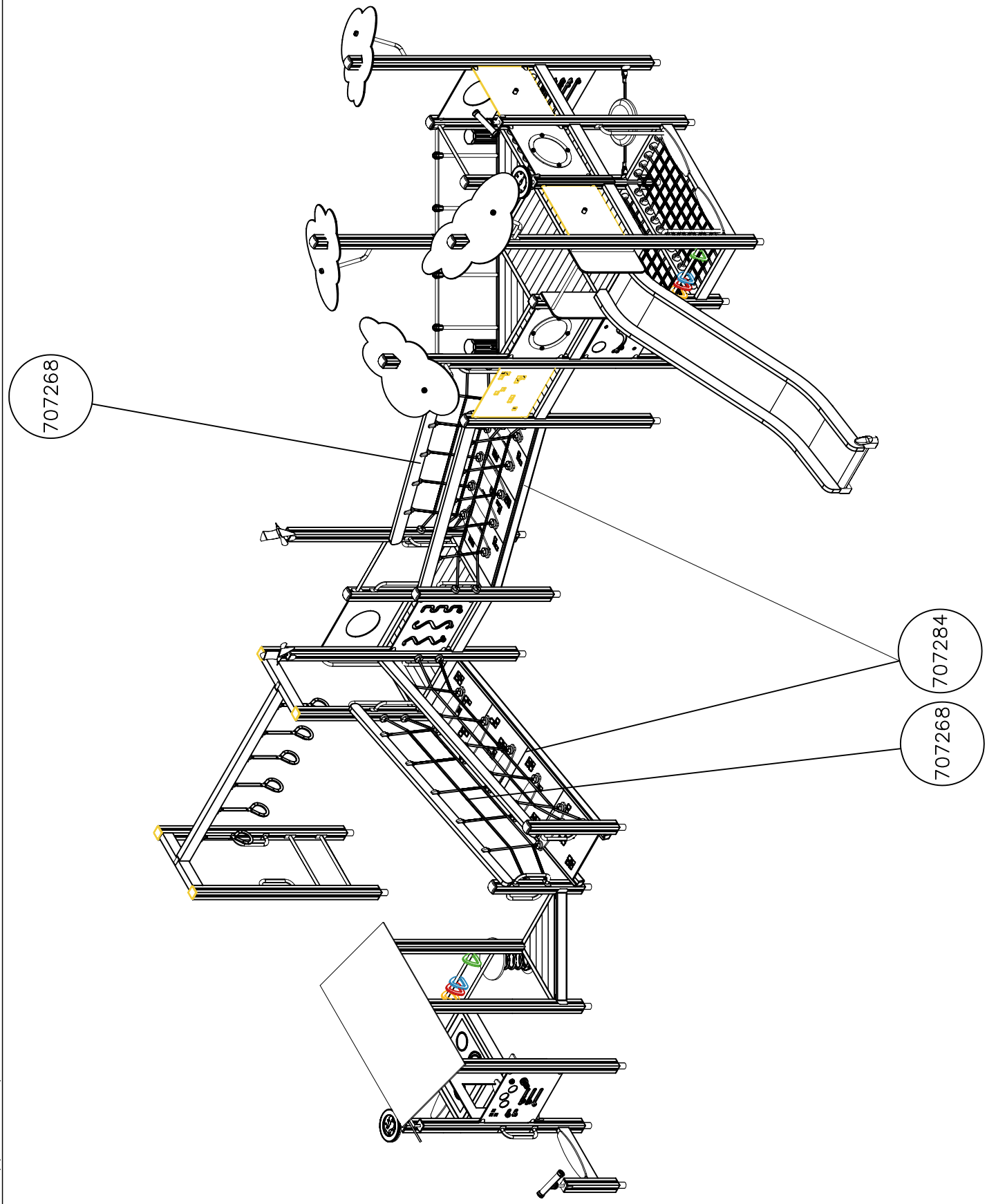

Copyright Lappset Group Ltd

LAPPSET®

FINNO

137603

DATE: 1.9.2016

8c

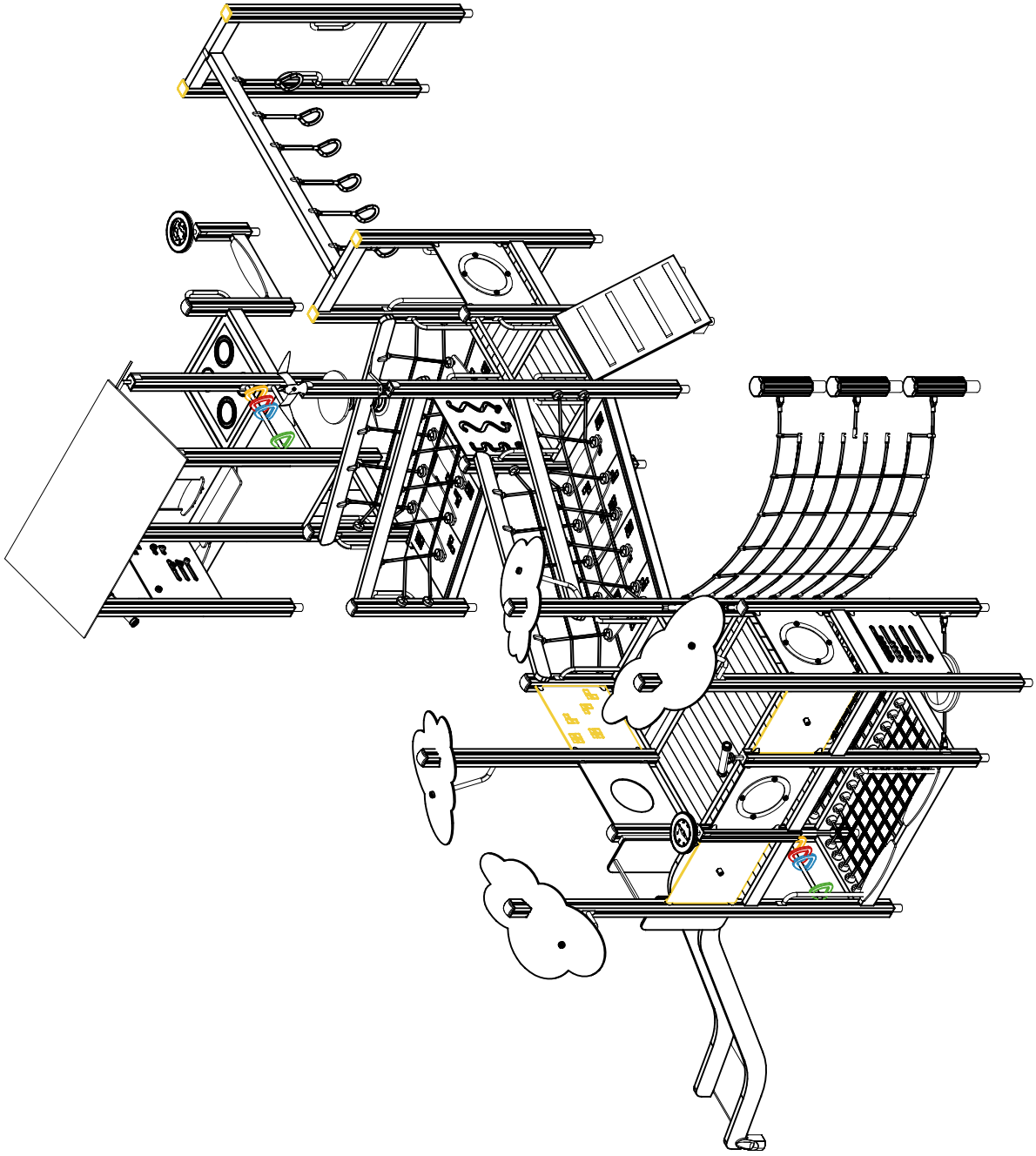

Copyright Lappset Group Ltd

LAPPSET®

Impact Area EN 1176

REF:
DATE: 20.2.2018

4x

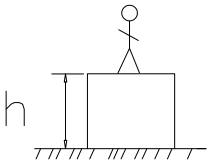

h < 600

Without movement and therefore without Impact Area

Totally hard surfaces.

Note. Lappset does <u>not</u> <u>recommend</u> totally hard surfaces at all.

E.g. concrete or asphalt

h < 600

With movement e.g. rocking

Materials with very limited impact attenuating properties.

E.g. wood

h < 1000

Materials with significant impact attenuating properties.

fine gravel 0–8 mm

grass

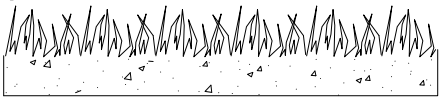

unsorted sand

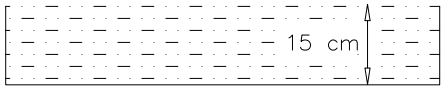

h < 3000

Loose fill material

E.g.
sand/gravel 0,25...8 mm D60/D10<3,0
Woodchips 5...30 mm
bark 20...80 mm

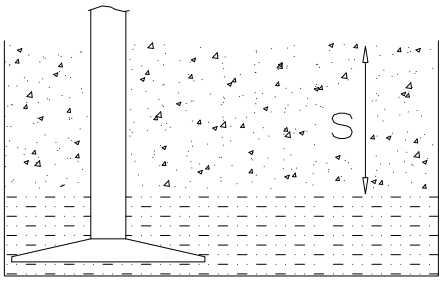

S	h
30 cm	< 2,0 m
40 cm	< 3,0 m

Syntethic granulates

S	h
40 mm	~> 1,2...1,3 m
50 mm	~> 1,5...1,7 m
60 mm	~> 1,8...2,0 m
70 mm	~> 2,1...2,5 m

Note. For accurate values, see manufacturer's instructions.

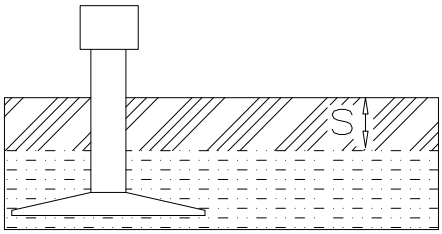

Copyright Lappset Group Ltd

LAPPSET®

EN 1176 FOUNDATION

REF:
DATE: 20.2.2018

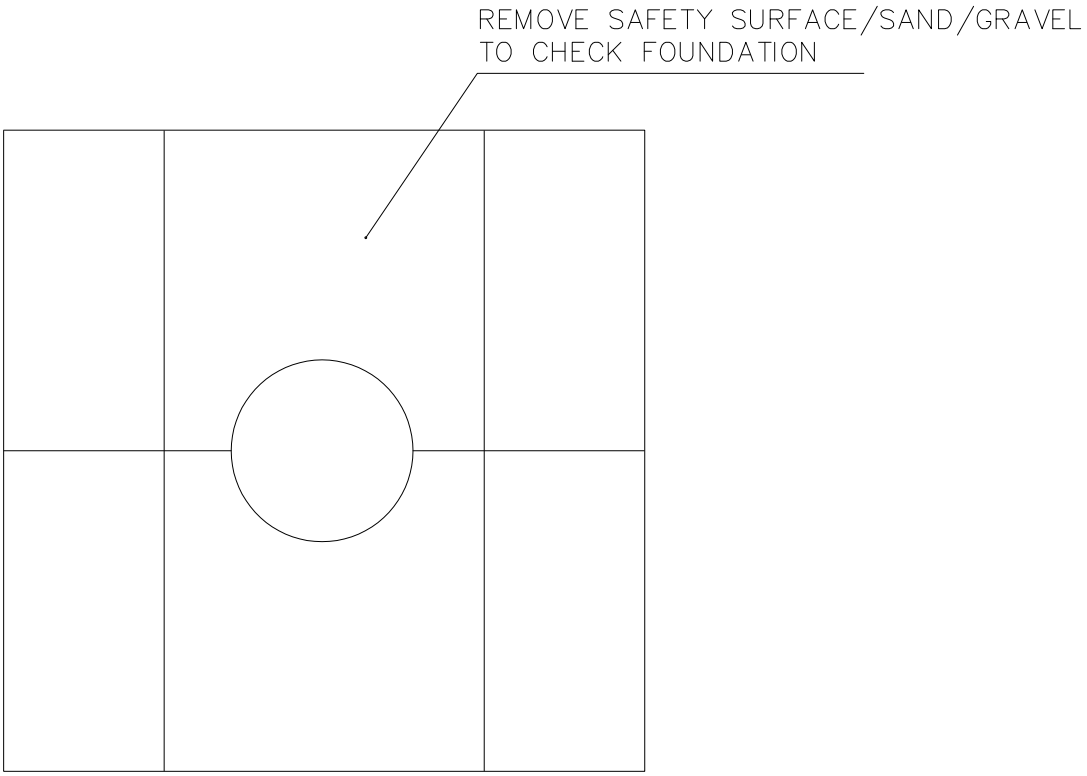

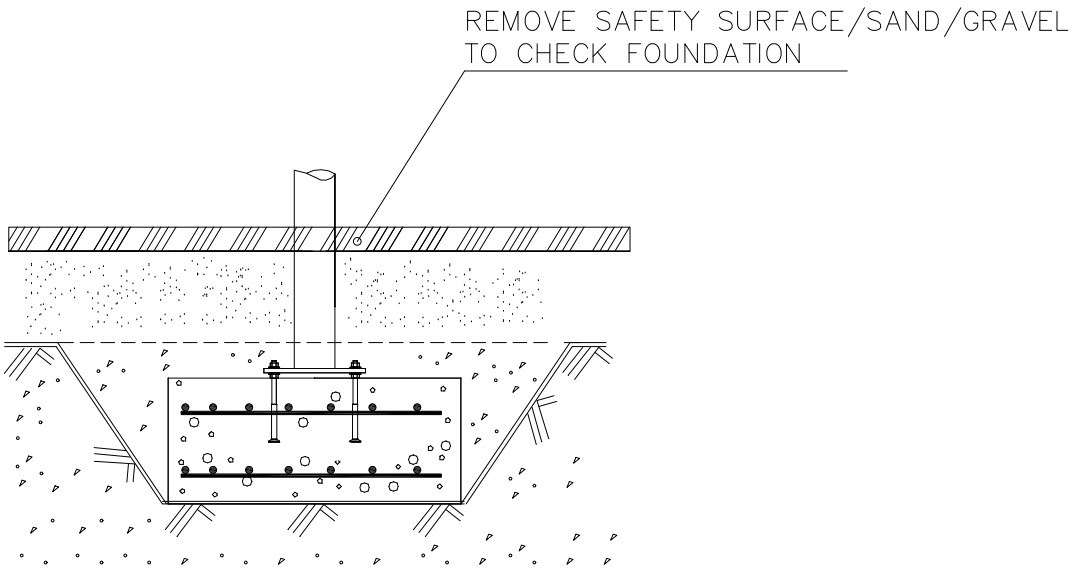

Copyright Lappset Group Ltd

LAPPSET®

FOOT

BETON FOUNDATION

DATE: 27.10.2015

1(1)

② 905104 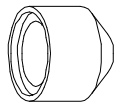 M10	PCS 4		PCS
	PCS		PCS

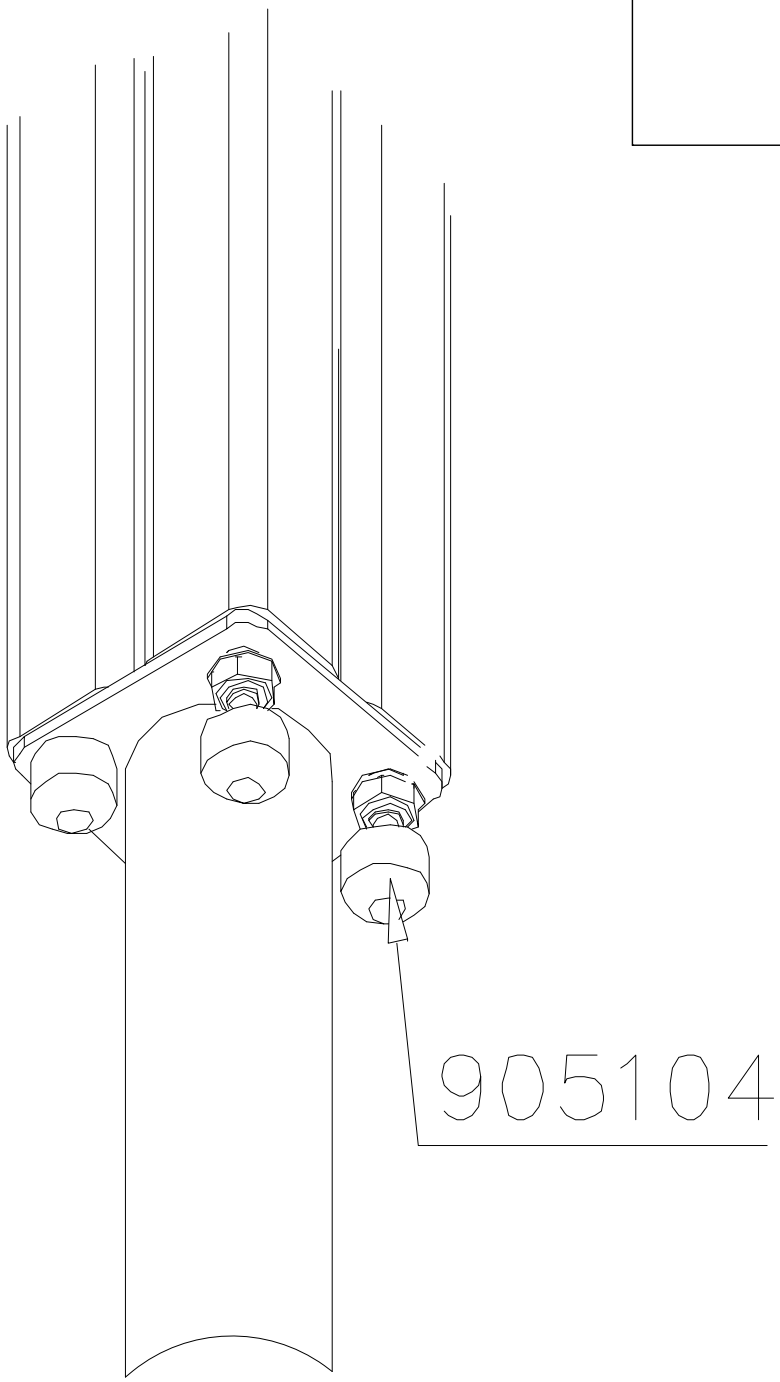

Copyright Lappset Group Ltd

LAPPSET®

FOOT

DEEP FOUNDATION

DATE: 13.3.2014

4A

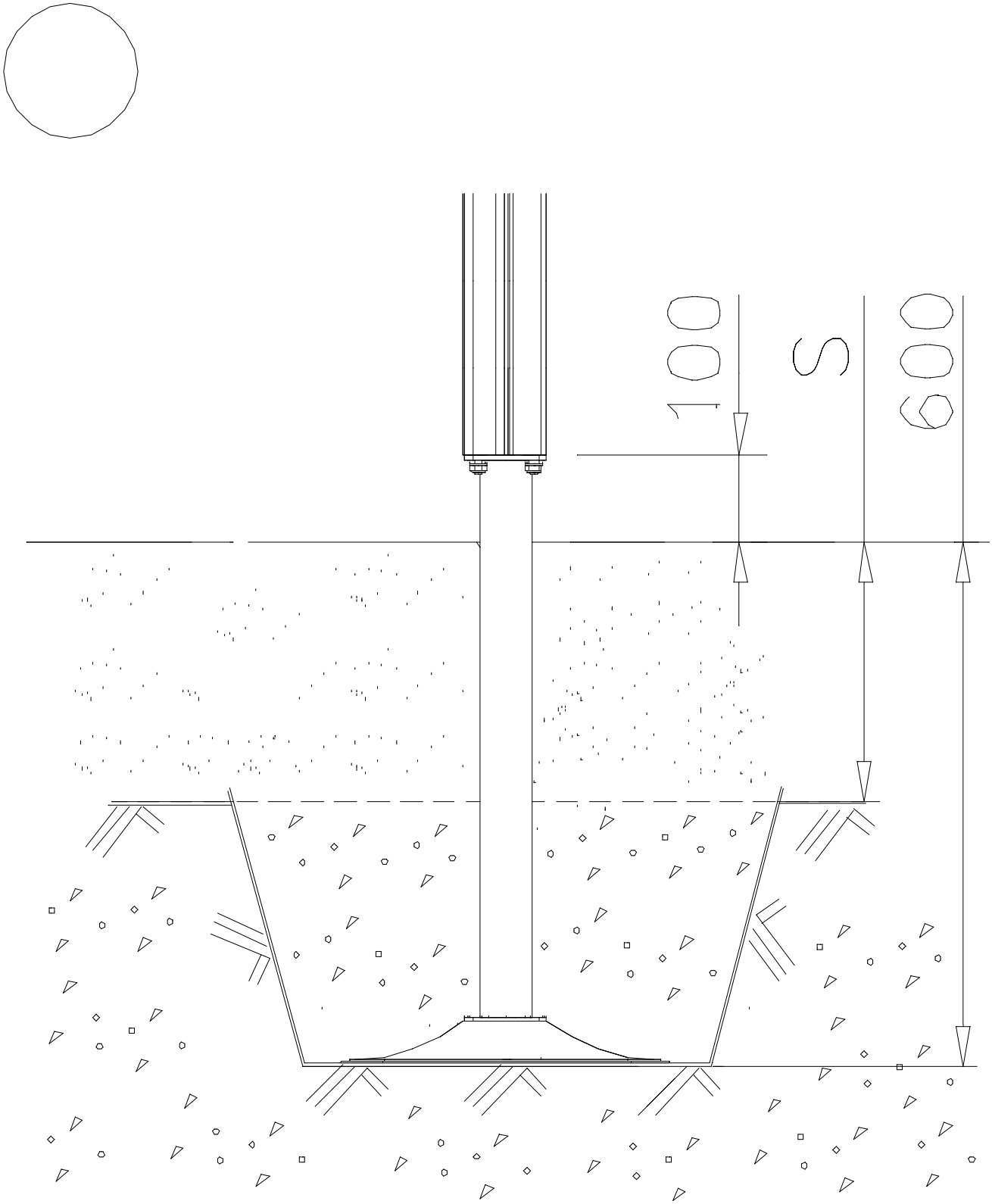

Copyright Lappset Group Ltd

LAPPSET®

FOOT

DEEP FOUNDATION

DATE: 15.5.2018

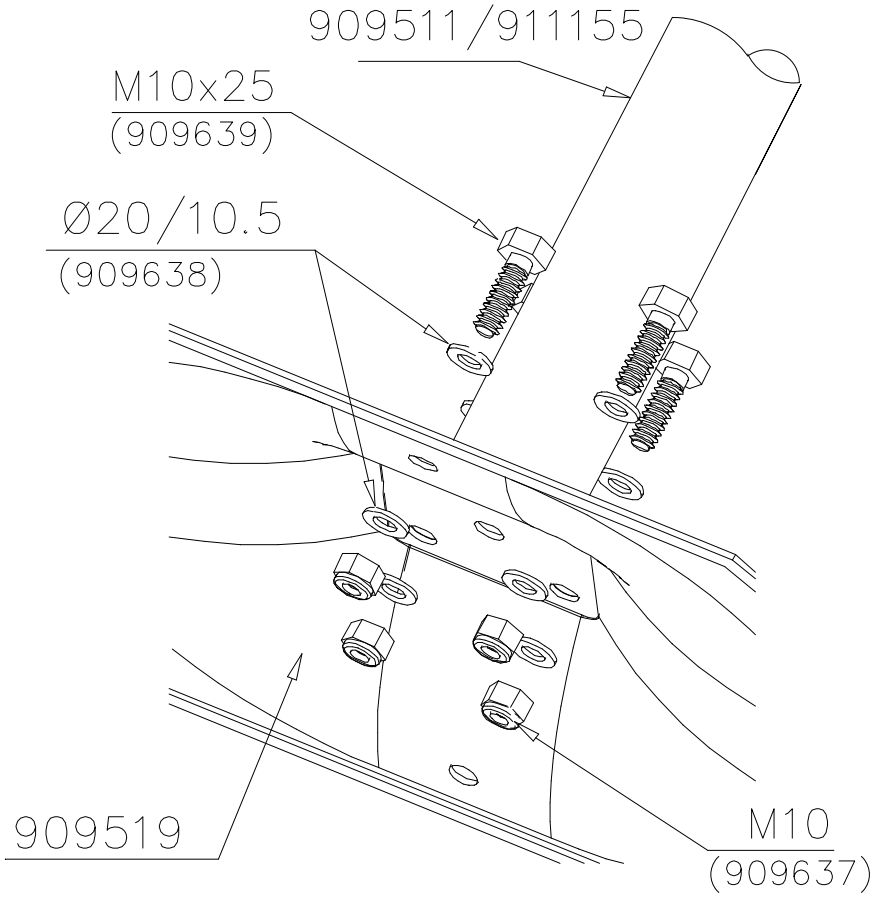

		PCS			PCS
1	909511	1	2	909519	1
	90x90x650			50x380x380	
3	909637	4	4	909638	8
	M10			Ø20/10.5	
5	909639	4	6	905104	4
	M10x25			M10	

OPTION FOOT

		PCS			PCS
1	911155	1			
	90x90x650				

Copyright Lappset Group Ltd

LAPPSET SLIDE WOOD

DEEP FOUNDATION

DATE: 22.5.2015

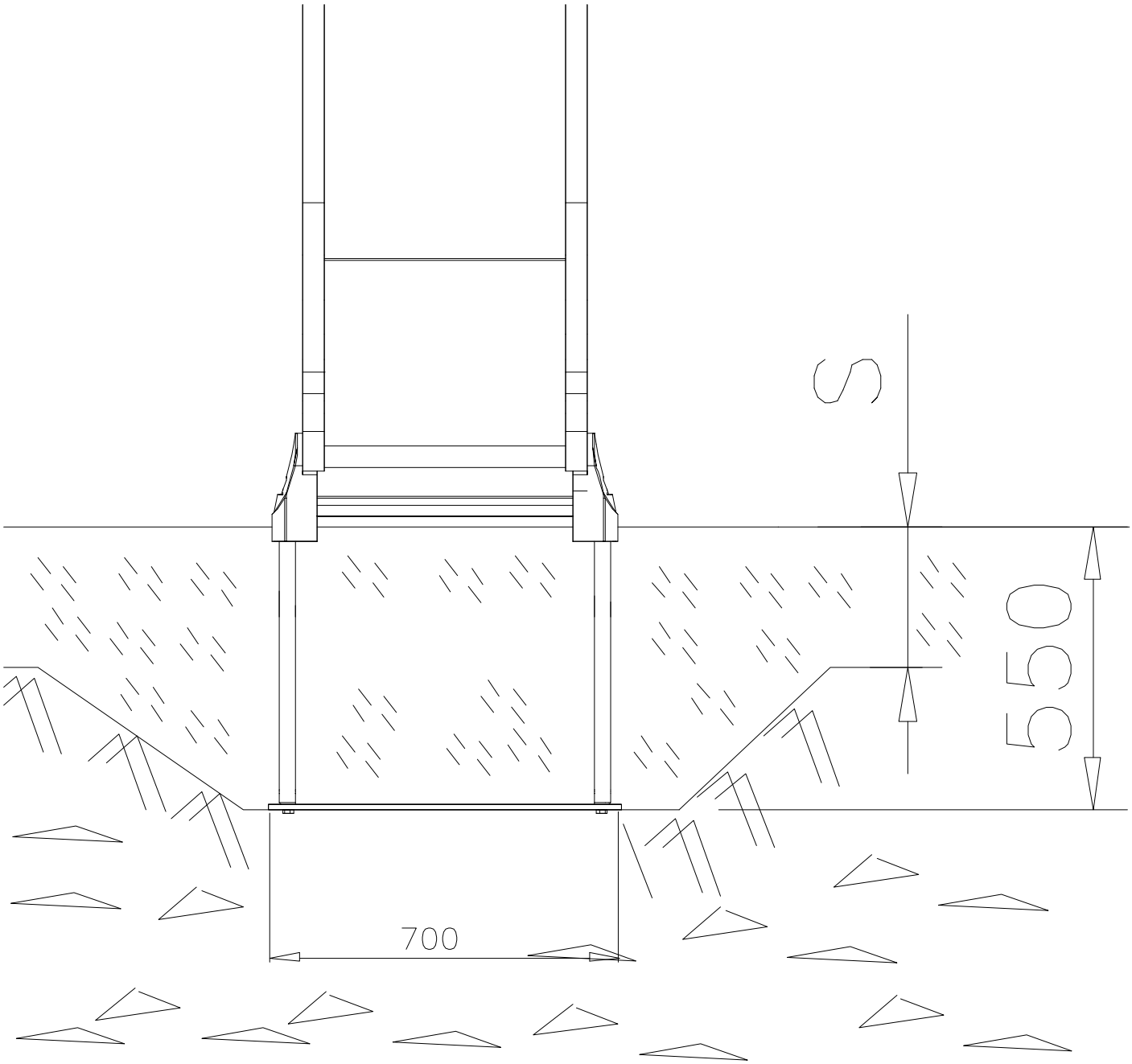

Copyright 1998 Lappset Group Ltd

LAPPSET®

SLIDE WOOD

DEEP FOUNDATION

DATE: 3.11.2017

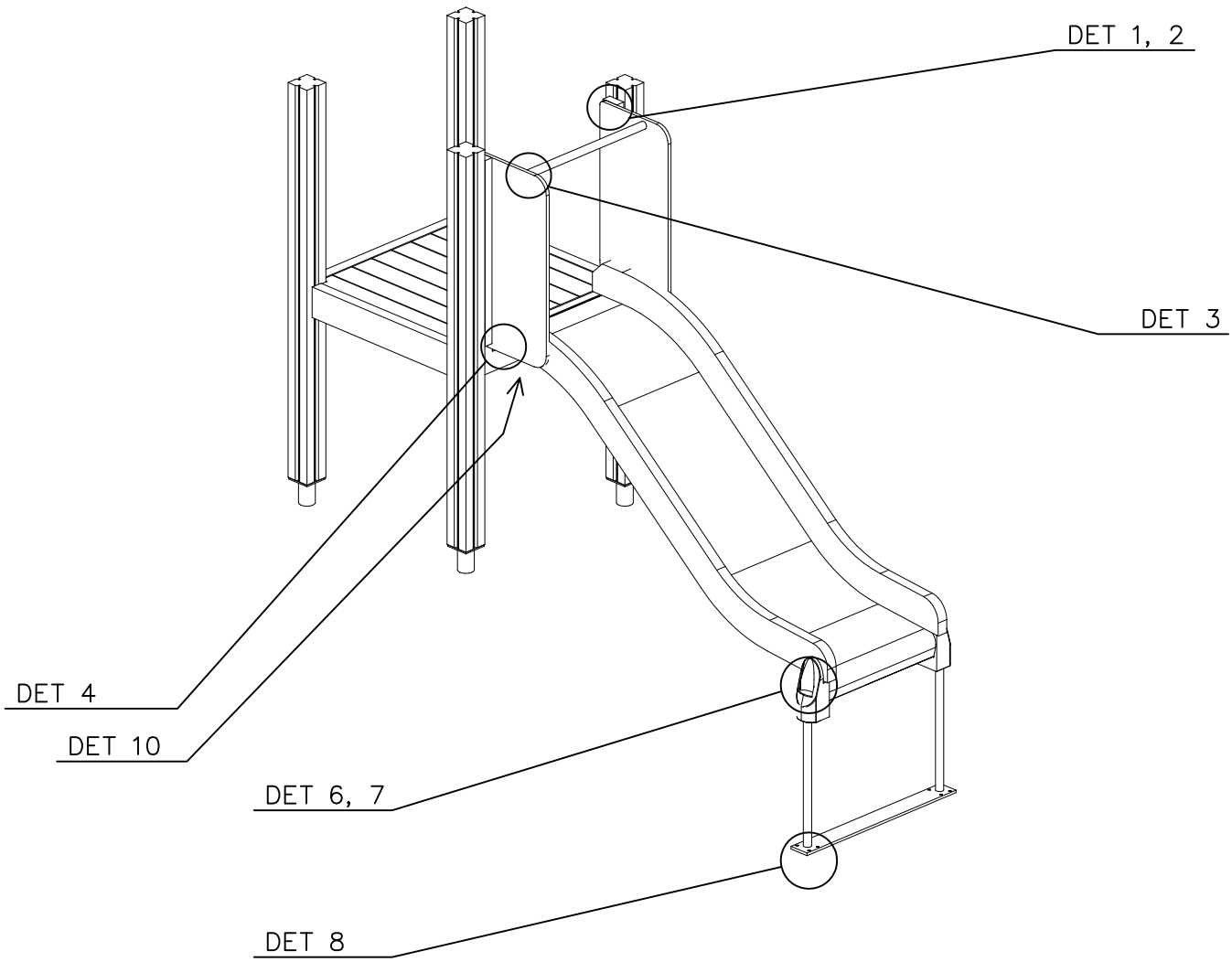

SLIDE OPTIONS

706450 +1470 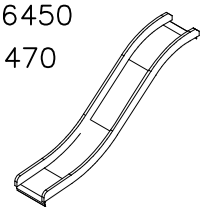	706450–602 DARK BROWN 706450–603 LIGHT BROWN 706450–604 LIGHT GRAY	
706452 +870 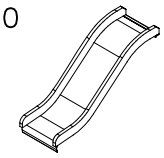	706452–602 DARK BROWN 706452–603 LIGHT BROWN 706452–604 LIGHT GRAY	

WALL OPTIONS

706371 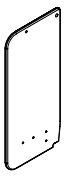	706371–701 BLUE 706371–702 YELLOW 706371–703 LIME 706371–704 DRARK GRAY 706371–705 LIGHT GRAY 706371–706 RED	706371–707 GREEN 706371–708 FUXIA

Copyright Lappset Group Ltd

LAPPSET SLIDE WOOD

80M DATE: 3.11.2017

	PCS		PCS		PCS		PCS		PCS		PCS
SLIDE	1	SLIDE	1	706371	2	706505	2	901868	1	(1) 903093	2
+1470		+870		15x345x750		35x70x730		Ø34x598		Ø8x90	
(2) 909876	2	(3) 980100	12	(4) 980128	11	(5) 999561	1				
M8x40		Ø5x60		Ø7x40		10g					

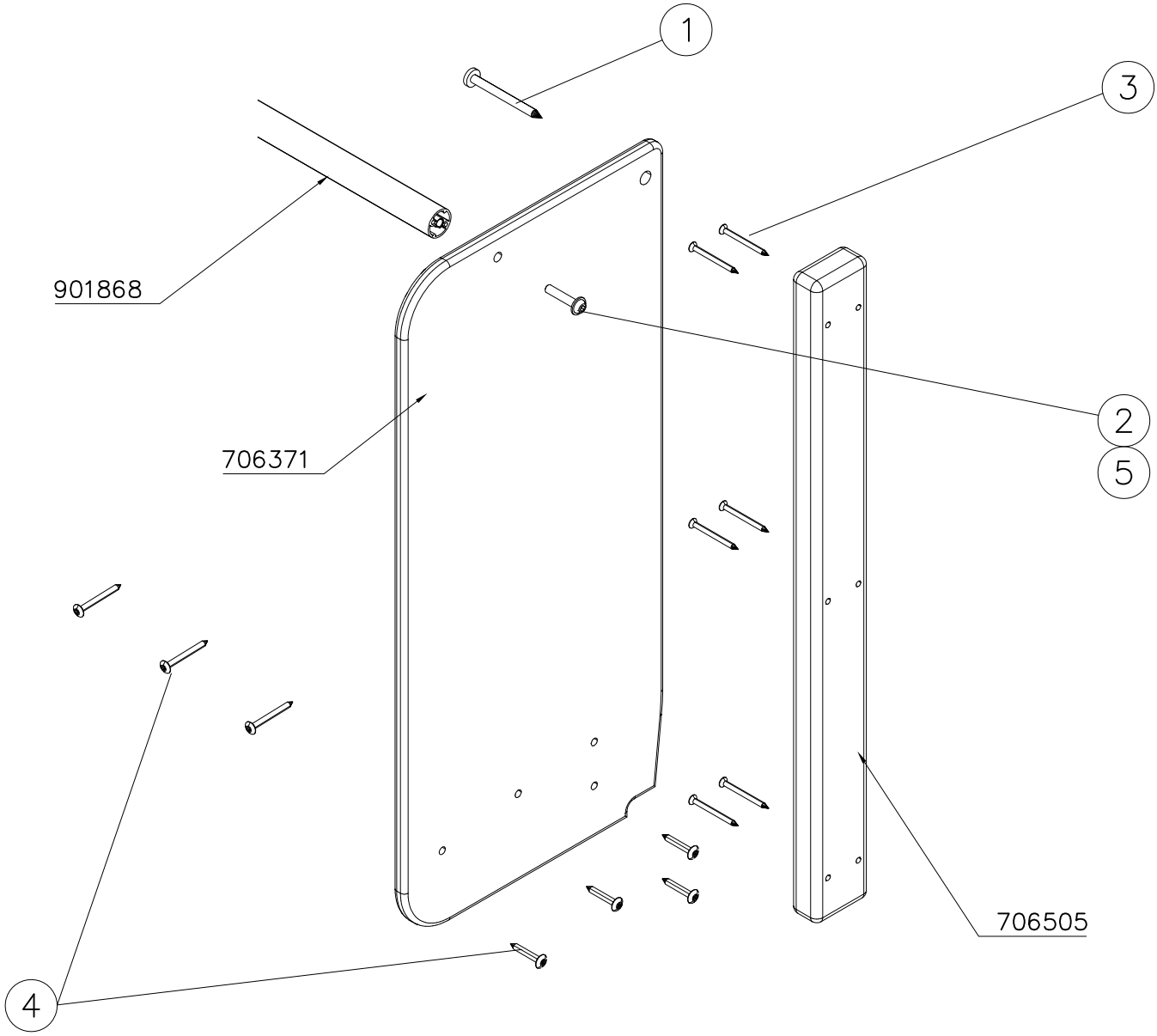

Copyright 1998 Lappset Group Ltd

LAPPSET®

SLIDE WOOD

80M

DATE: 3.11.2017

DET 1

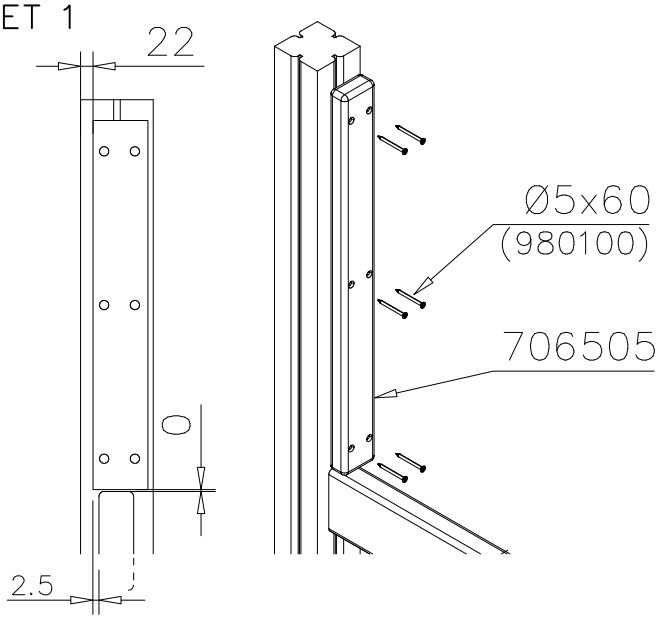

DET 2

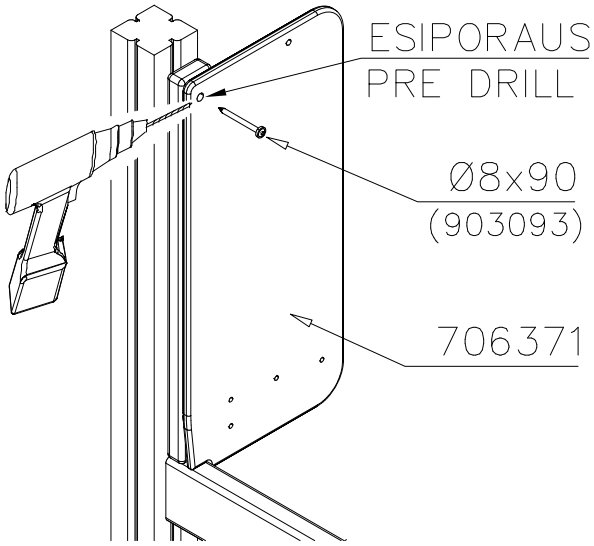

DET 3

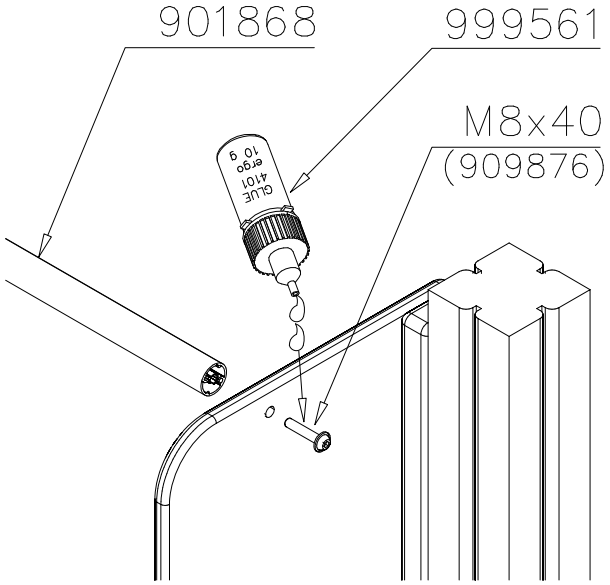

DET 4

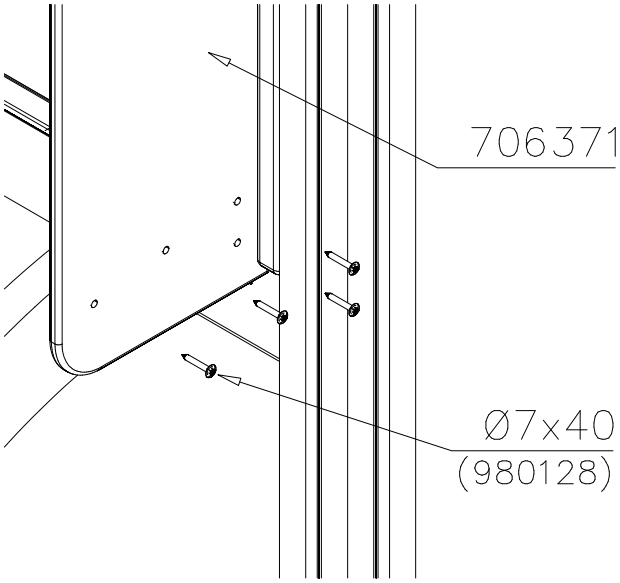

DET 5

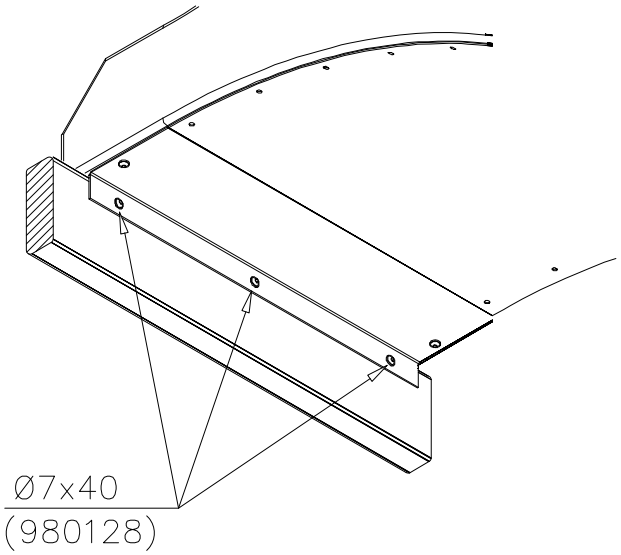

Copyright 1998 Lappset Group Ltd

LAPPSET SLIDE WOOD

DEEP FOUNDATION

DATE: 3.11.2017

	PCS		PCS		PCS		PCS		PCS		PCS
707133	1	901868	2	901879	2	6 909210	4	7 905051	4	8 980128	6
10x80x745		Ø30x598				M8x40		Ø24/8.4		Ø7x40	

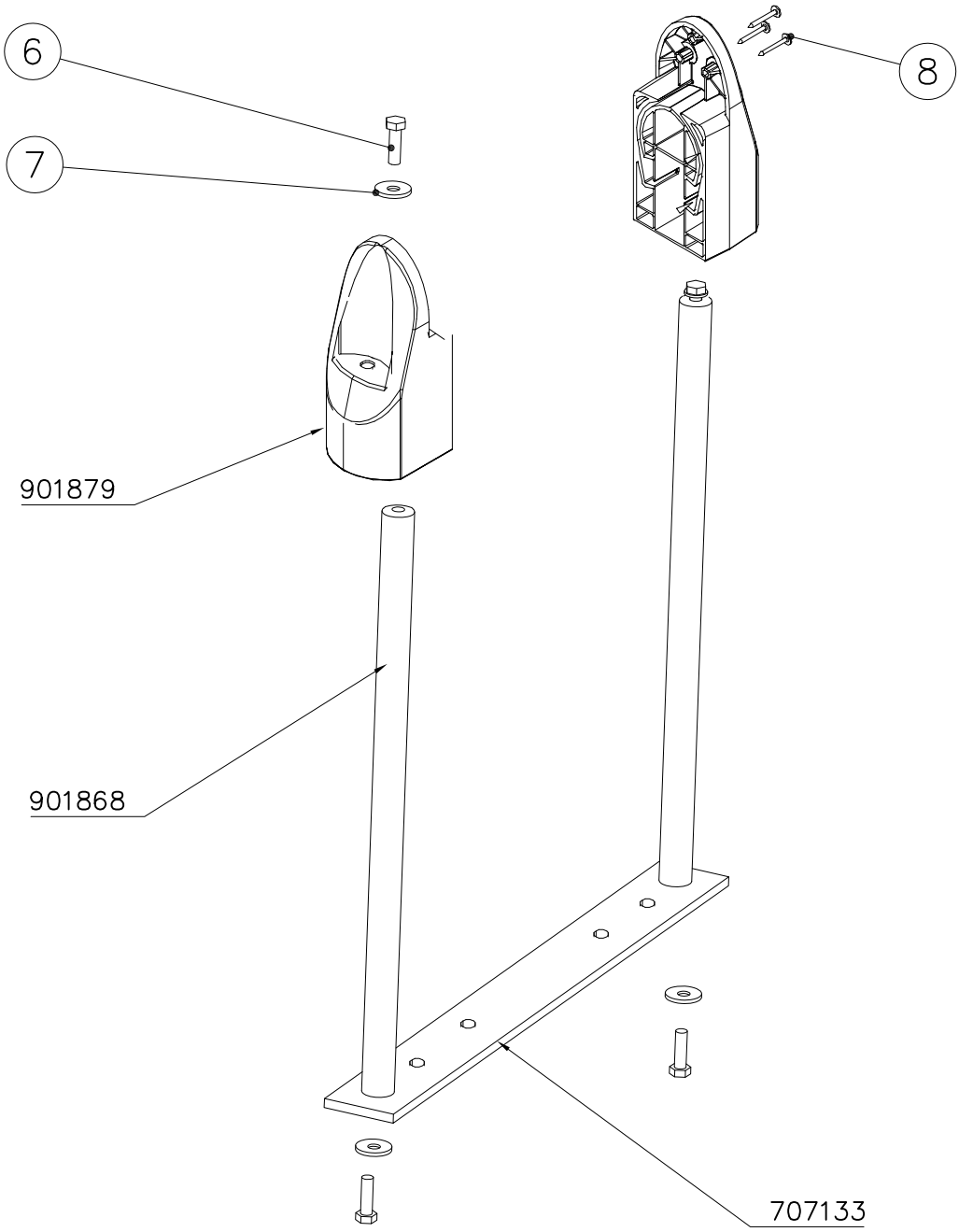

Copyright 1998 Lappset Group Ltd

LAPPSET SLIDE WOOD

DEEP FOUNDATION

DATE: 3.11.2017

DET 6

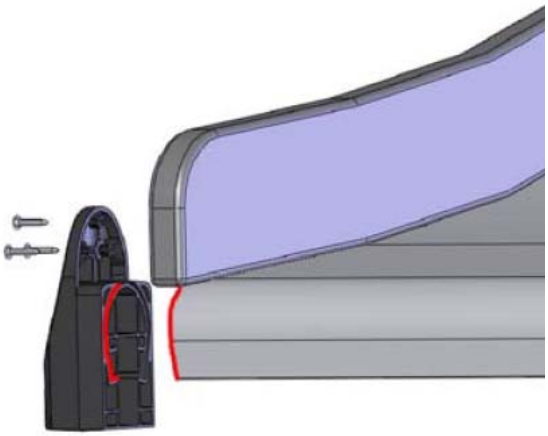

Insert sheet metal IN to the plastic cover.

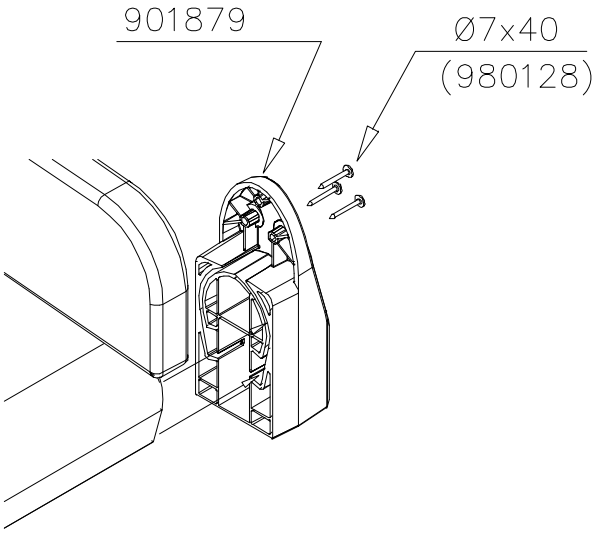

DET 7

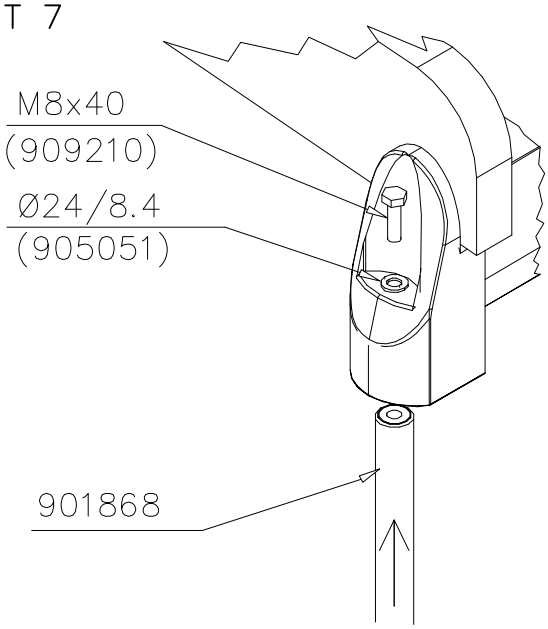

DET 8

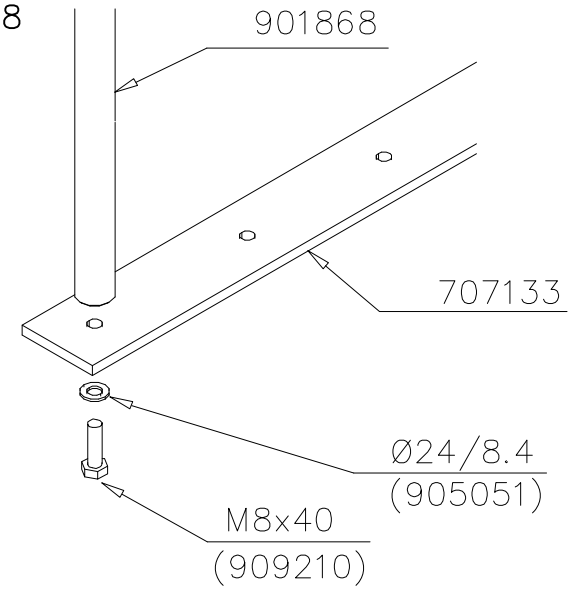

Copyright 1998 Lappset Group Ltd

LAPPSET®

WALLS 4 points

HPL

DATE: 29.3.2016

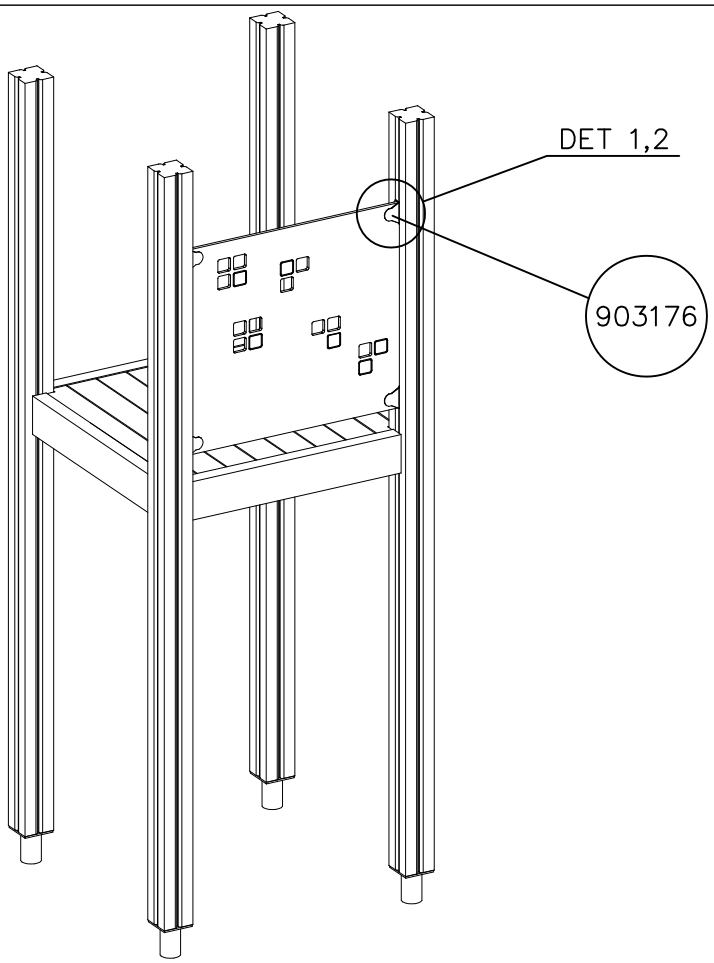

		PCS
1	903176	4
2	909850 M8x25	4
3	909256 Ø16/8.4x1.6	8
4	909633 M8	4
5	980123 Ø7x60	4

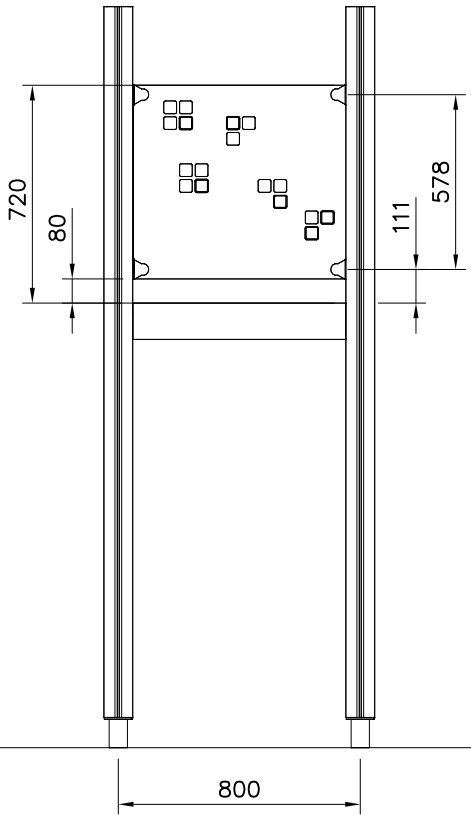

Copyright Lappset Group Ltd

LAPPSET®

WALLS 4 points

HPL

DATE: 29.3.2016

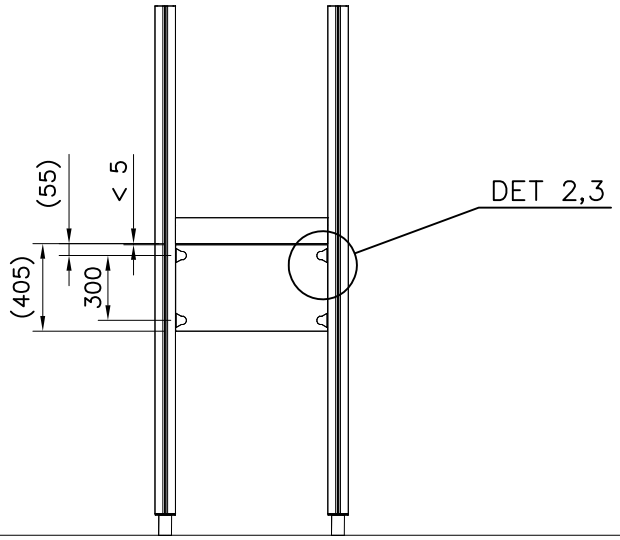

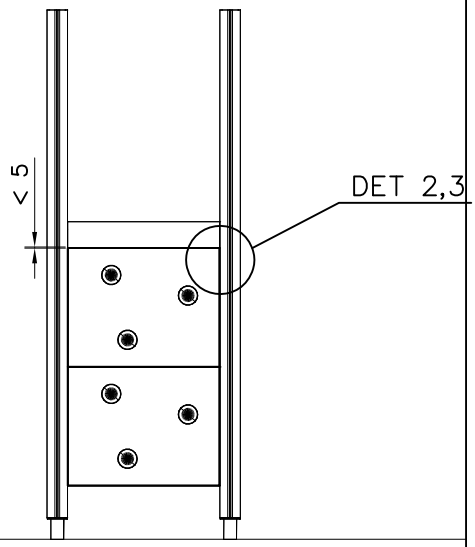

DET 1

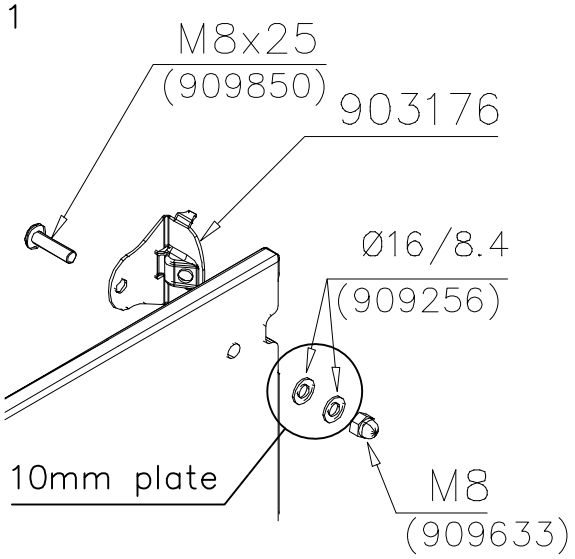

DET 2

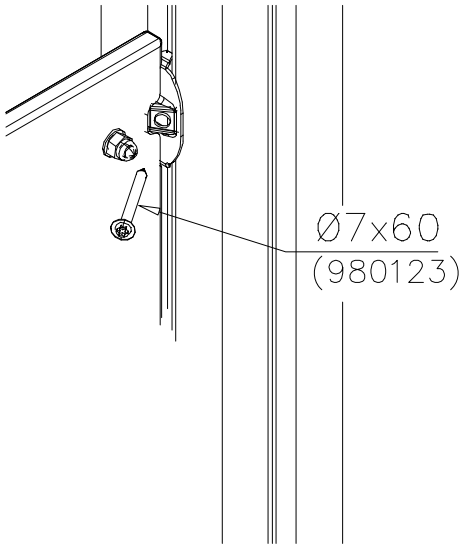

DET 3

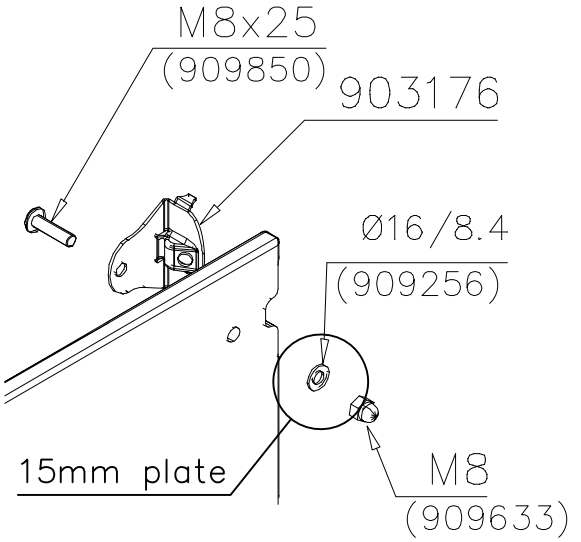

Copyright 1998 Lappset Group Ltd

LAPPSET®

FLOOR

FINNO

DATE: 28.11.2014

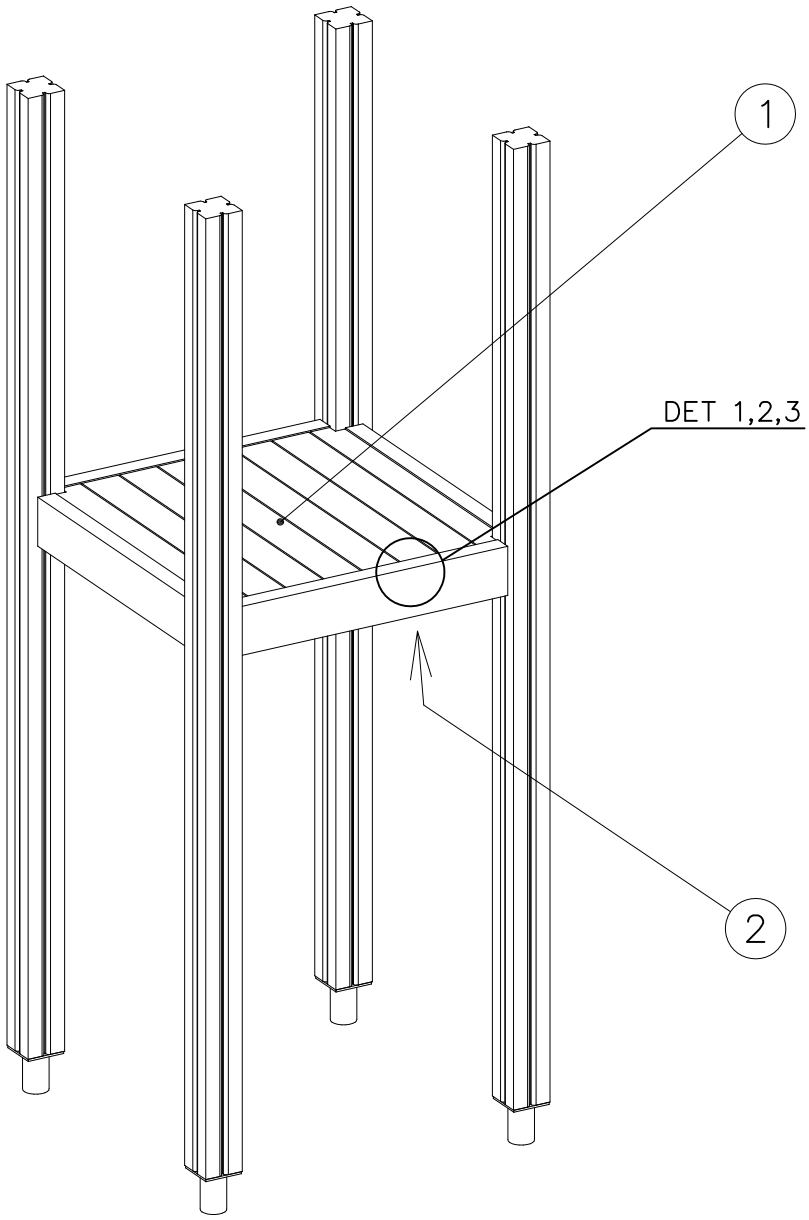

	PCS		PCS
1 008986 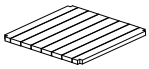 750x750	1	2 706443 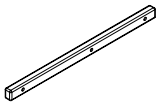 32x45x702	2
3 900240 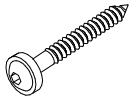 Ø8x70	6	4 980101 Ø4.5x70	8
	PCS		PCS
	PCS		PCS
	PCS		PCS

DET 1

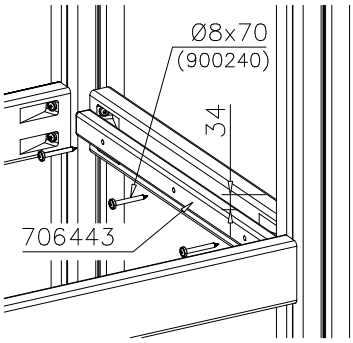

DET 2

Naulanauha kannatinlistan puolelle.
Nail list to the bottom.

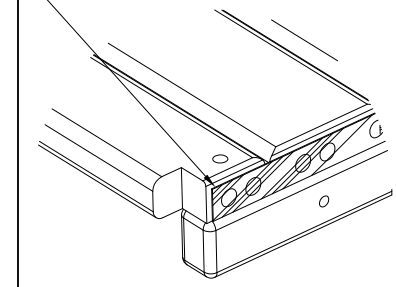

DET 3

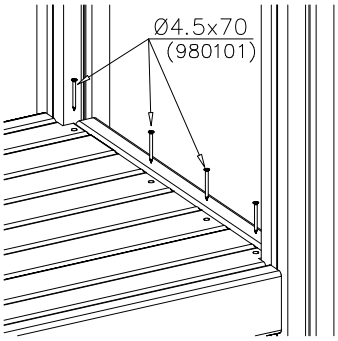

Copyright Lappset Group Ltd

LAPPSET®

DIAG. FLOOR

FINNO

DATE: 28.3.2014

		PCS
1	008985	1
	32x714x714	
2	706508	3
	32x45x650	
3	900240	9
	Ø8x70	
4	980101	6
	Ø4.5x70	

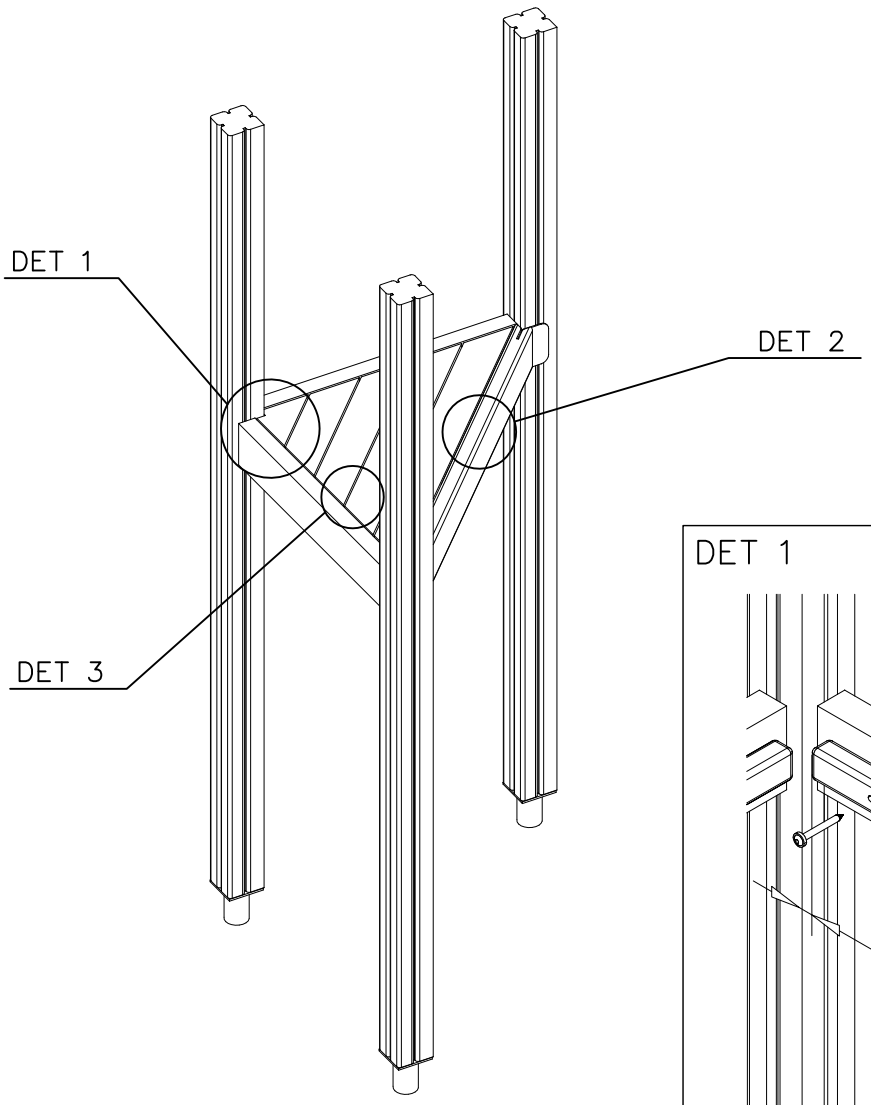

DET 1

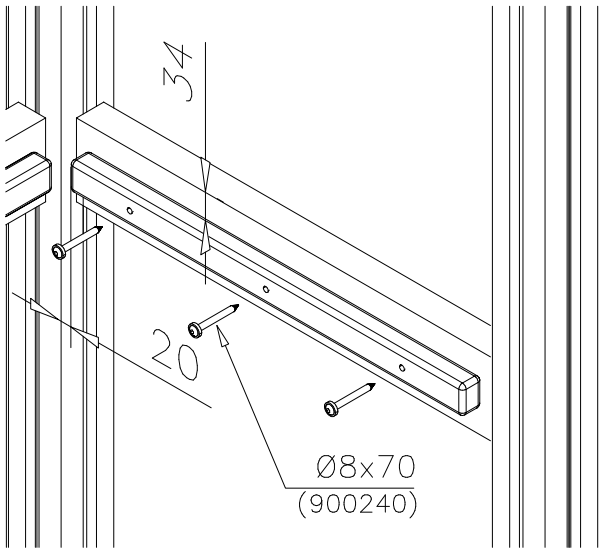

DET 2

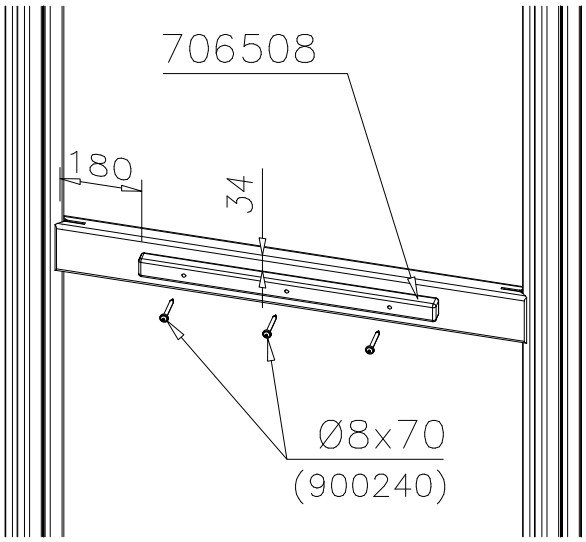

DET 3

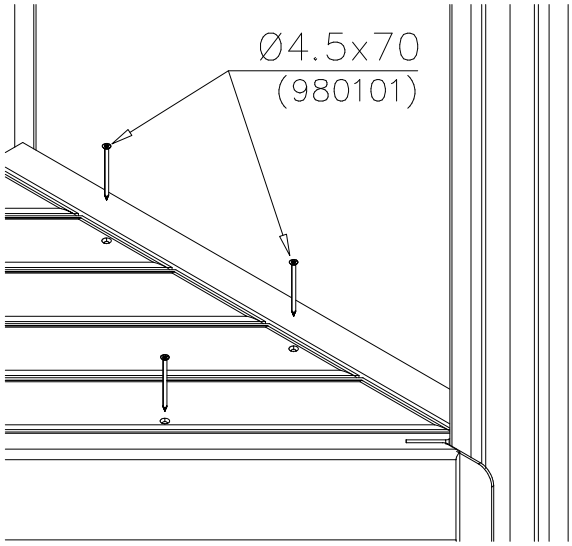

Copyright Lappset Group Ltd

LAPPSET®

BOOM

FINNO

DATE: 21.3.2014

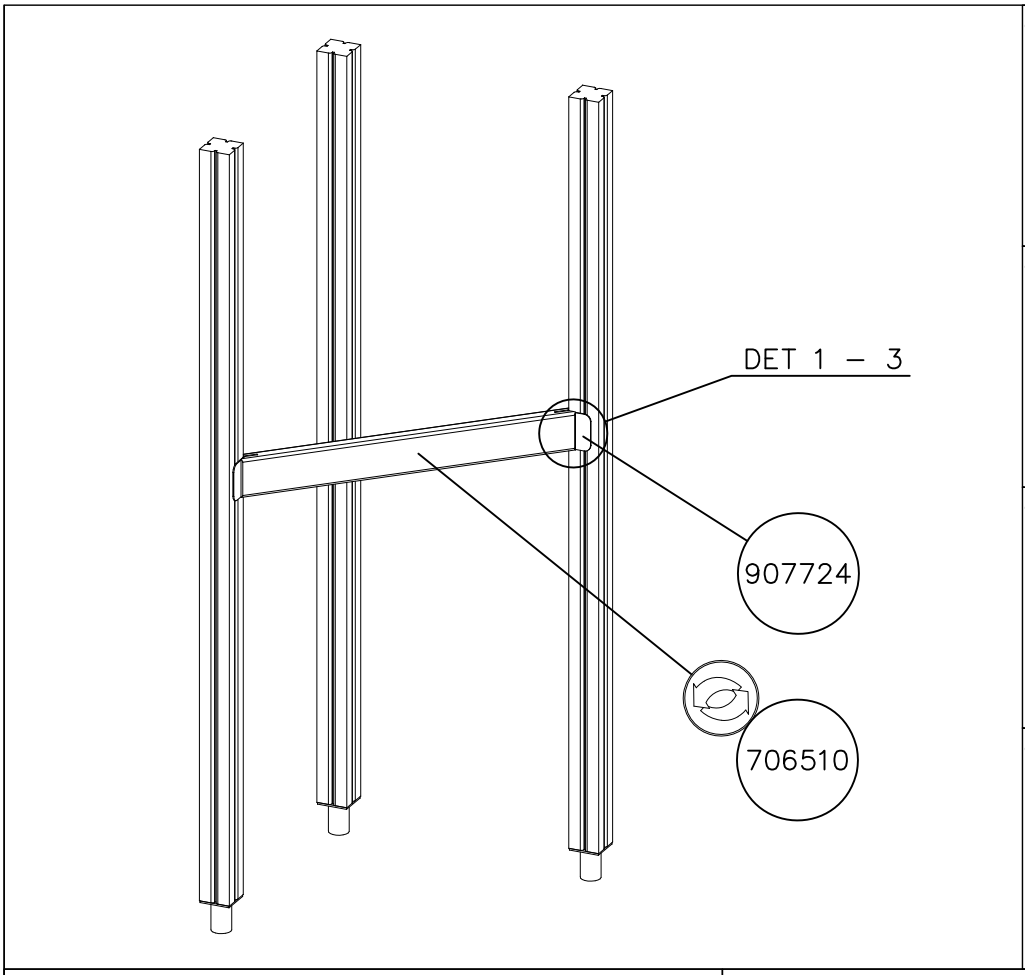

		PCS			PCS
1 706510	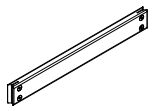 45x120x1030	1	2 907724	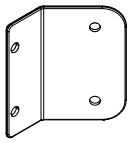	2
3 905083	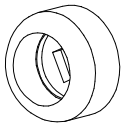 Ø32	4	4 909866	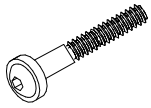 M8x60	4
5 980151	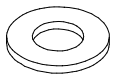 Ø16/8.4	4	6 980150	M8	4
7 905112	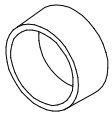 Ø22	4	8 900240	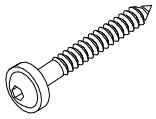 Ø8x70	4

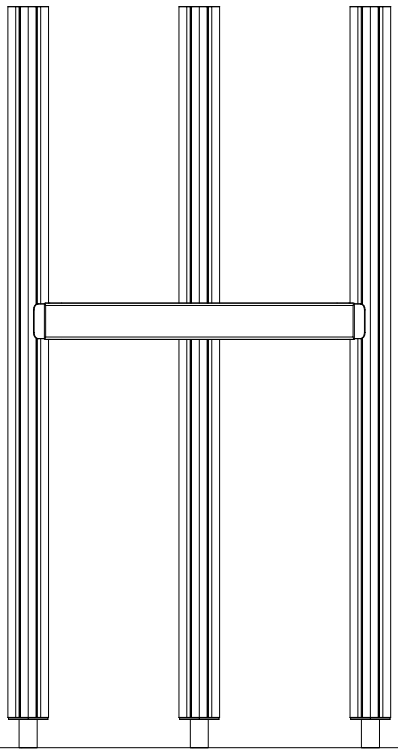

1131

BOOM OPTIONS

706510 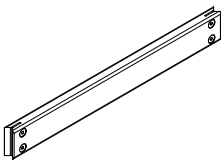 45x120x1030	706510–602	DARK BROWN
	706510–603	LIGHT BROWN
	706510–604	LIGHT GRAY

Copyright Lappset Group Ltd

LAPPSET®

BOOM

FINNO

DATE: 21.3.2014

DET 1

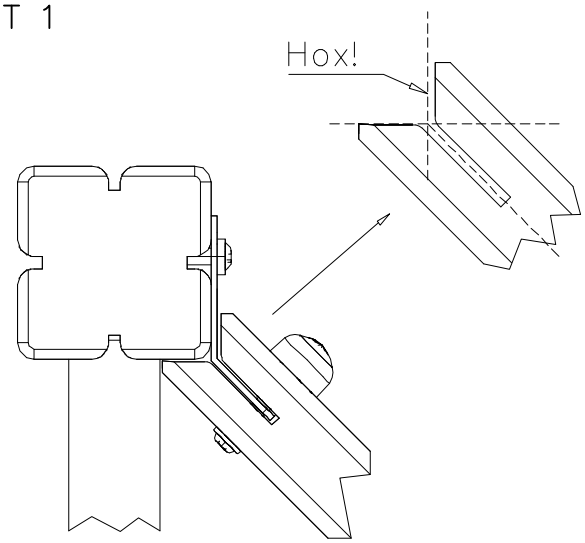

DET 2

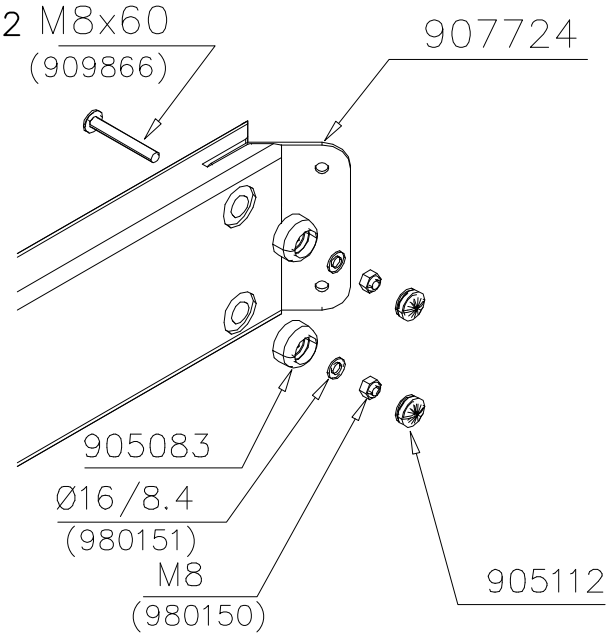

DET 3

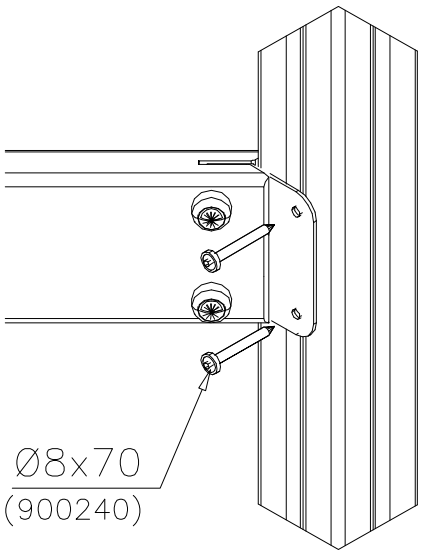

Copyright 1998 Lappset Group Ltd

LAPPSET®

RINGS

FINNO

DATE: 11.12.2024

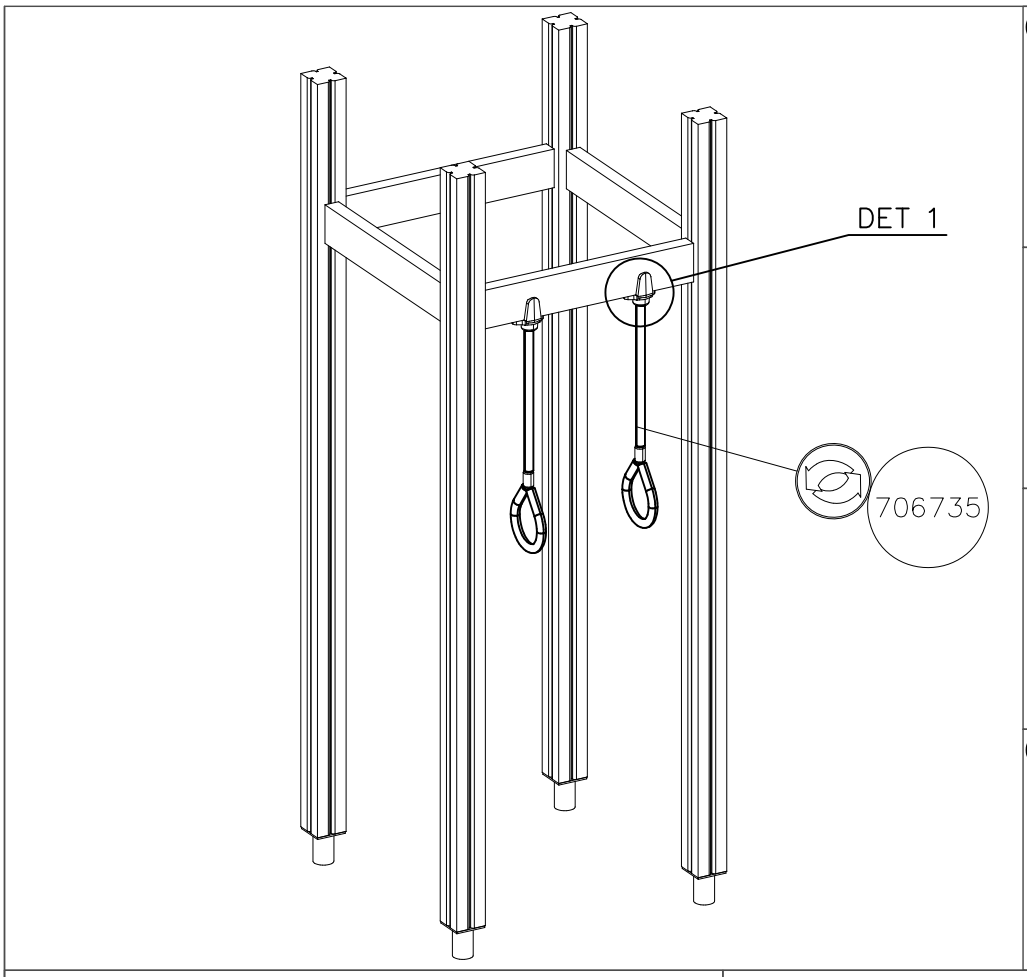

1	980123 Ø7x60	PCS 4	2 980128 Ø7x40	PCS 2
		PCS		PCS
		PCS		PCS
	706735	PCS 1		PCS

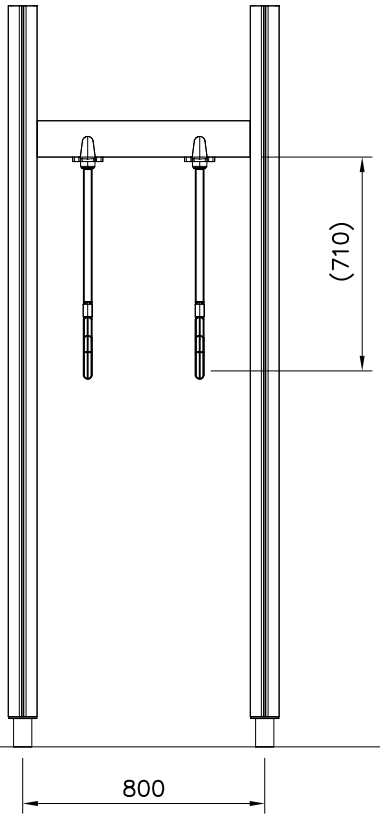

RINGS OPTIONS

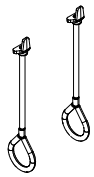

706735–301	BLUE
706735–302	RED
706735–303	BEIGE
706735–304	GRAY
706735–305	BLACK
706735–306	YELLOW

DET 1

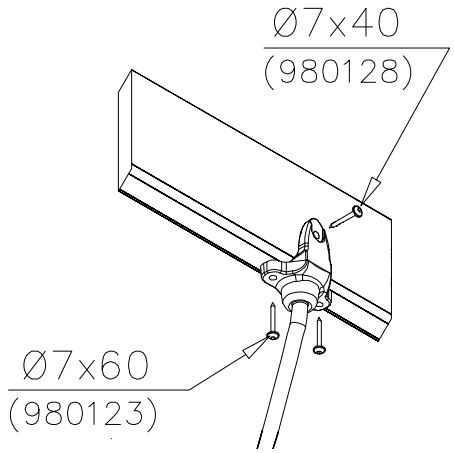

Copyright Lappset Group Ltd

LAPPSET®

FINNO

RINGS

DATE: 11.12.2024

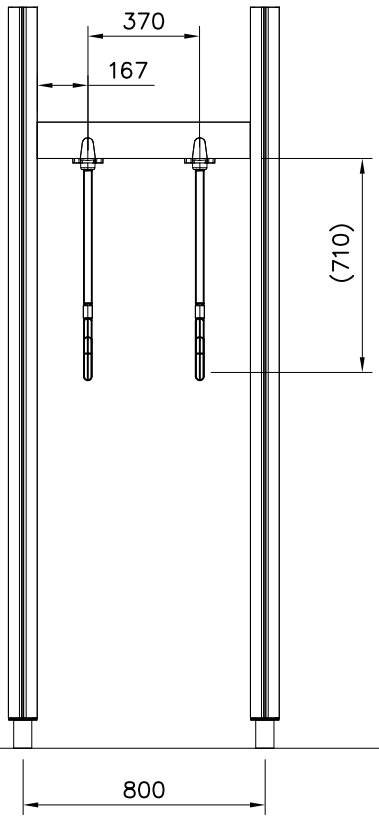

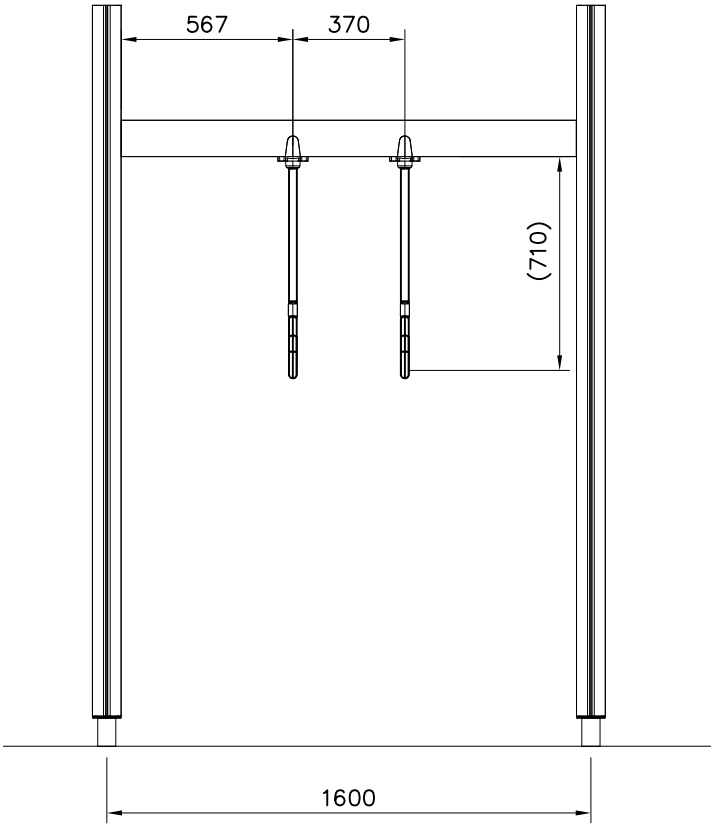

Copyright Lappset Group Ltd

1

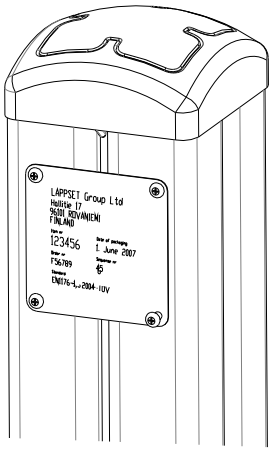

2

Tuotekyltti tulee tuotteen mukana yhdellä seuraavista tavoista:

1) Metallinen tuotekyltti ja kiinnitysruuvit

- Kiinnitä tuotekyltti ruuveilla tolppaan noin 2 metrin korkeuteen kuvan 1 mukaisesti.

2) Tuotekylttitarra

- Puhdista maalattu metalli- tai vaneripinta pölystä ja kosteudesta. Liimaa tarra kuvan 2 mukaisesti.
- Huom. Älä kiinnitä tarraa karheapintaiseen laminaattiin tai maalattuun puuhun.

Vår produktmärkning levereras på ett av följande sätt:

1) Produktskylt i metall

- Fäst skylten med de medföljande skruvarna

2) Självhäftande produktetikett

- Rengör den pulverlackerade metallytan eller laminatytan så att den blir fri från smuts och fukt. Fäst etiketten enligt fig. 2.
- Obs! Fäst ej etiketten på detaljer med skrovlig yta eller på målat trä.

Product label is delivered by one of following ways:

1) Metal product label and screws

- Fasten the label with screws.

2) Label sticker

- Clean the painted metal or plywood surface from dirt and moisture. Fasten the sticker as shown in the figure 2.
- Note. Do not attach the sticker to rough surfaced laminate or painted wood.

La plaque d’informations produit est livrée sous l’une de ces 3 formes :

1) Plaque métallique et vis

- Fixez la plaque à l’aide des vis.

2) Etiquette autocollante

- Avant de coller l’étiquette, nettoyez le composant métallique peint ou la plaque de contreplaqué, de toute saleté. La surface doit être sèche (voir image 2).
- Attention, ne pas coller l’étiquette sur une surface lamellé-collée irrégulière ou sur du bois peint.

Die Auslieferung des Produktaufklebers erfolgt auf eine dieser Arten:

1) Produkt-Schild aus Metall incl. Schrauben

- Die Befestigung des Schildes erfolgt mittels der Schrauben.

2) Aufkleber

- Entfernen Sie zunächst Schmutz und Feuchtigkeit vom lackierten Metall bzw. von der Holzoberfläche und bringen Sie den Aufkleber wie im Bild oben rechts beschrieben auf den gesäuberten Untergrund auf.
- Beachten Sie: Bringen Sie den Aufkleber nicht auf raues laminiertes oder lackiertes Holz an.

LAPPSET®

DESK / SEAT

FINNO

DATE: 25.1.2019

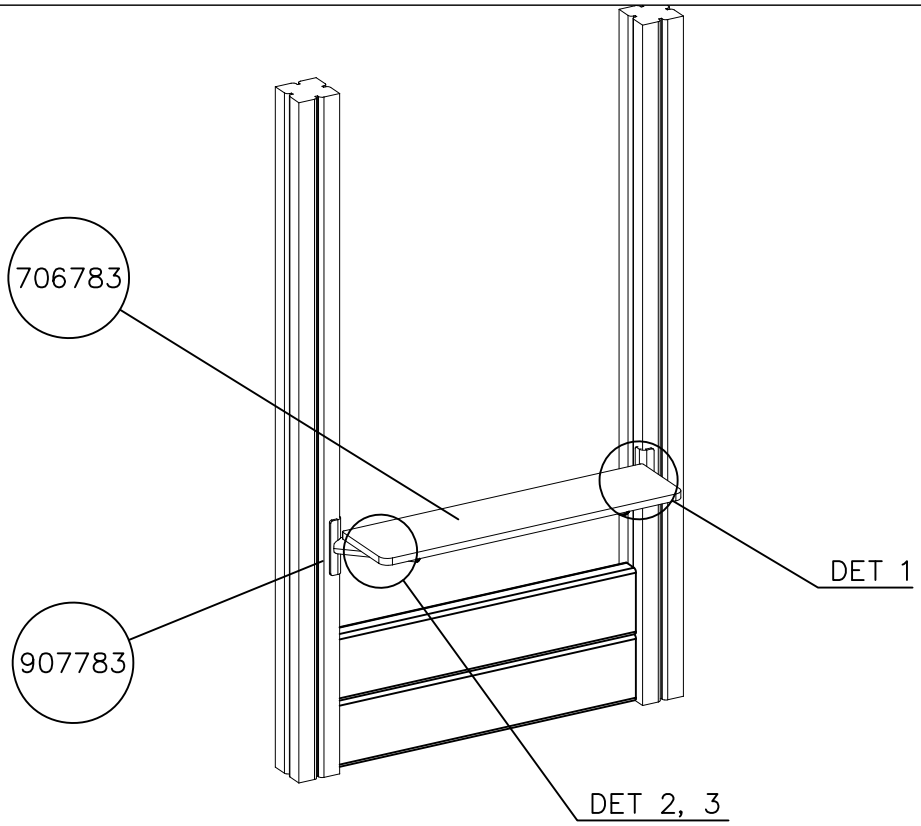

		PCS
1	706783 (15x170x700)	1
2	907783 (120x40x180)	2
3	900240 (Ø8x70)	4
4	909868 (M8x50)	4
5	909256 (Ø16/8.4)	8
6	909633 (M8)	4
7	905103 (PT–28/32–H)	2
8	905112 (Ø22)	4

1:20

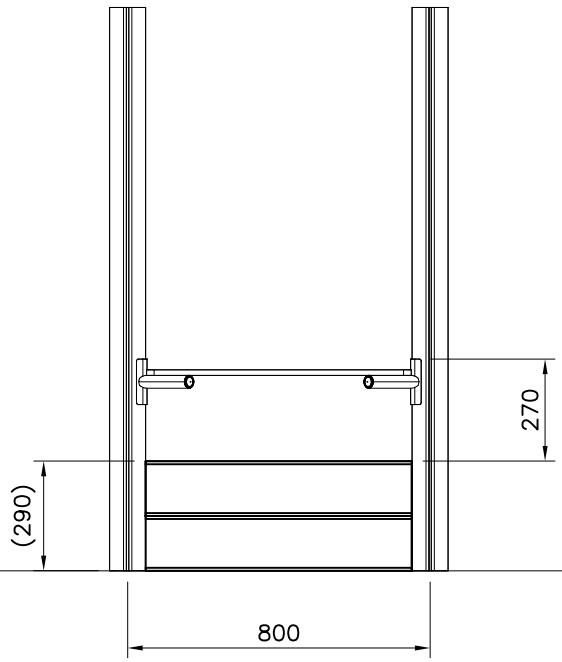

1:20

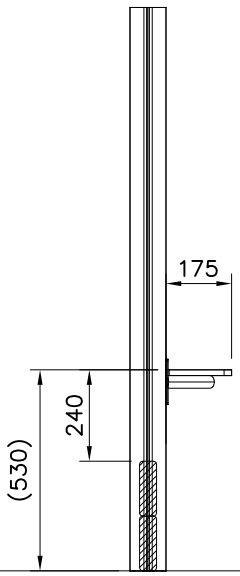

Copyright Lappset Group Ltd

LAPPSET®

DESK / SEAT

FINNO

DATE: 25.1.2019

DET 1

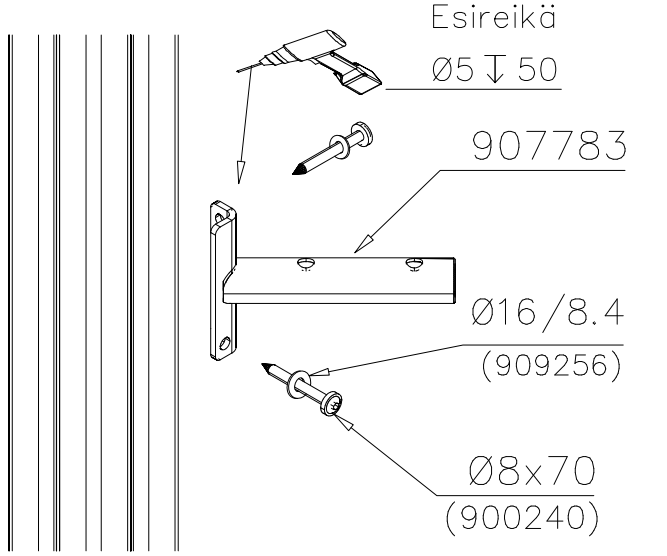

DET 2

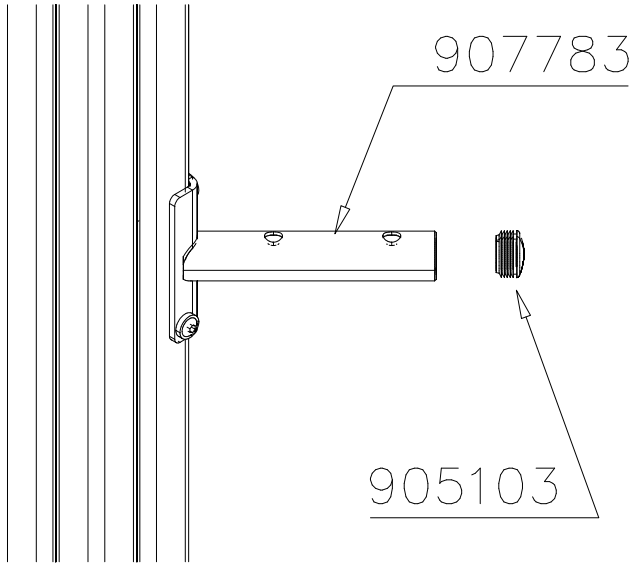

DET 3

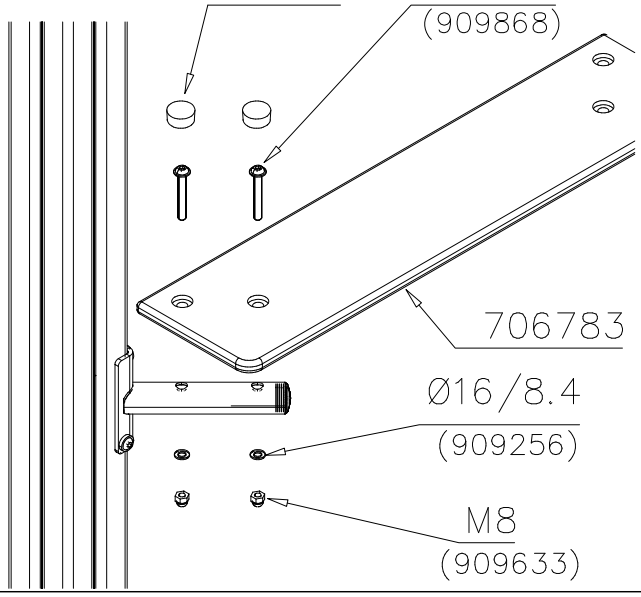

Copyright 1998 Lappset Group Ltd

LAPPSET®

GAME WALL

M80

DATE: 4.11.2019

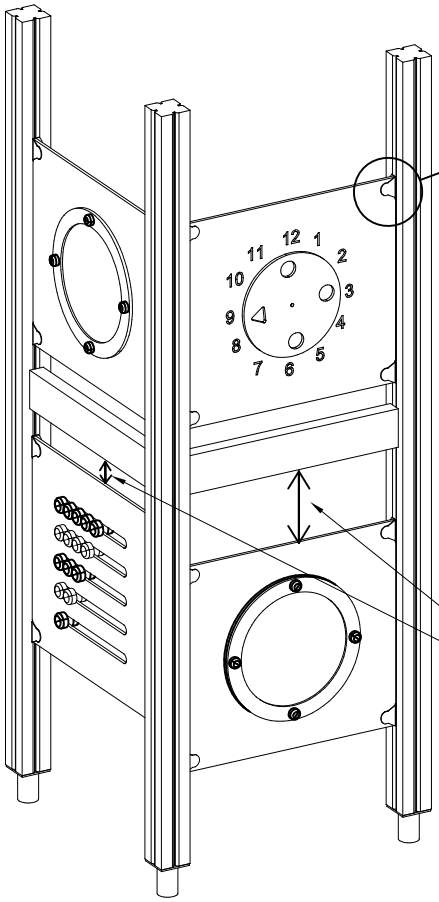

*Note:
No gaps between:
8–25mm
89–230mm

		PCS
1	903176	4
2	909850 M8x25	4
3	909256 Ø16/8.4x1.6	8
4	909633 M8	4
5	980123 Ø7x60	4

COLOR OPTIONS	
–701	BLUE
–702	YELLOW
–703	LIME
–704	DARK GRAY
–705	LIGHT GRAY
–706	RED
–707	GREEN
–708	FUXIA

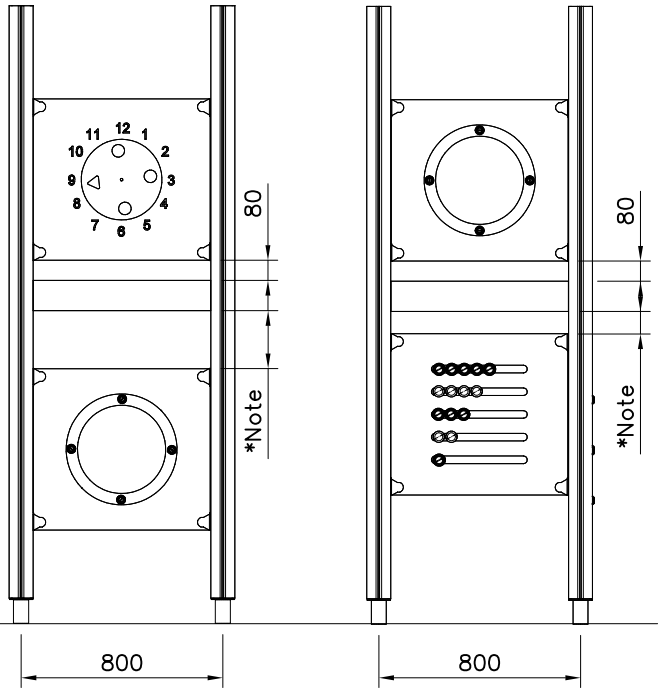

Copyright Lappset Group Ltd

LAPPSET®

GAME WALL

M80

DATE: 4.11.2019

GAME WALL OPTIONS

706766	706772	706308	707453
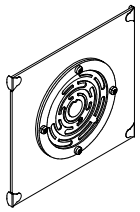 640x702	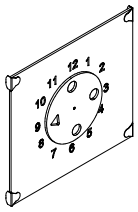 640x702	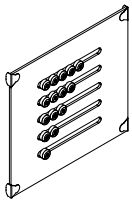 640x702	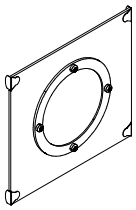 640x702
707209	**705705**	**707433**	**707386**
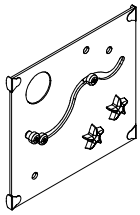 640x702	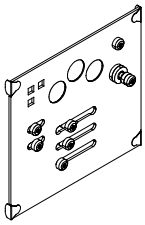 640x702	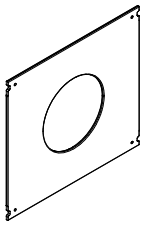 640x702	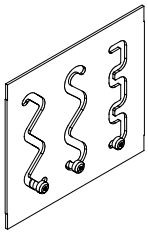 640x702
709403	**709358**	**709405**	
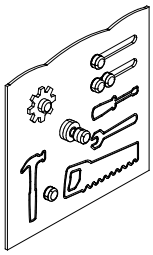 640x702	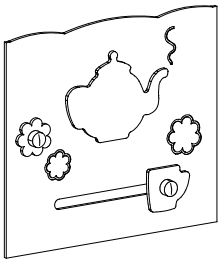 640x702	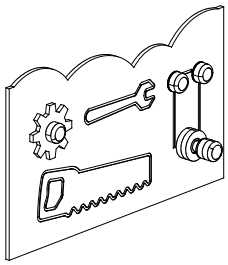 420x702	

DET 1

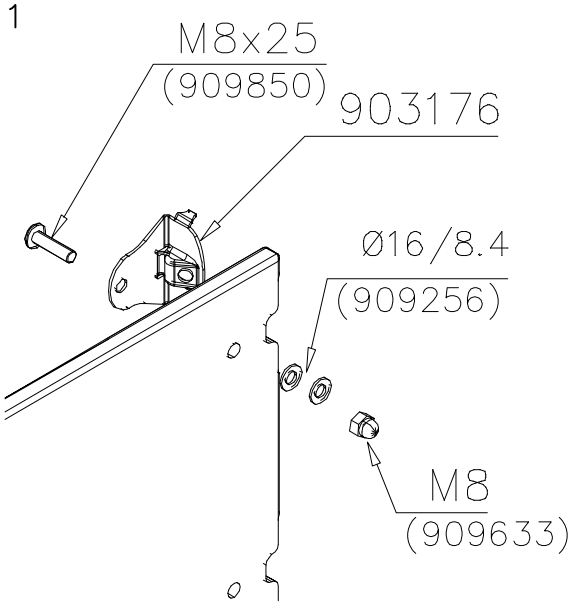

DET 2

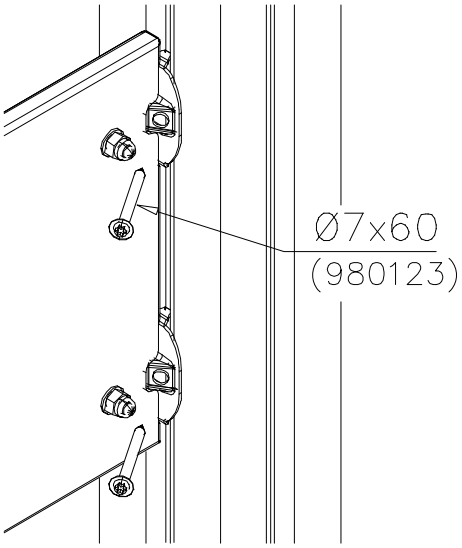

Copyright 1998 Lappset Group Ltd

LAPPSET®

DESK

FINNO

DATE: 27.7.2015

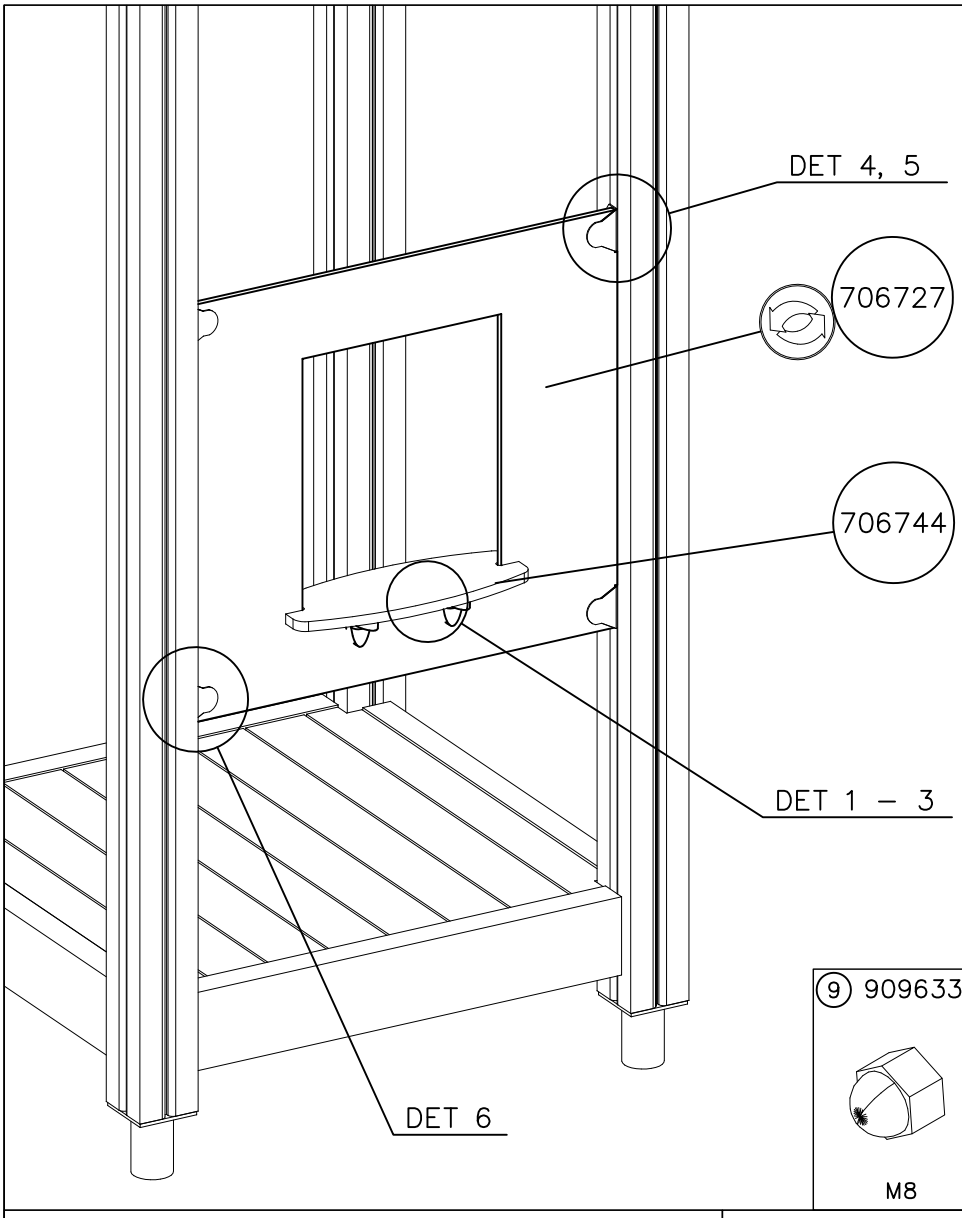

		PCS			PCS
1 706727	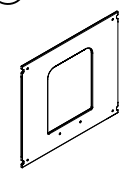 10x702x640	1	2 706744	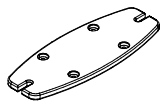 15x145x380	1
3 901570	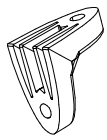 36x55x55	4	4 903176	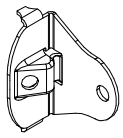	4
5 909855	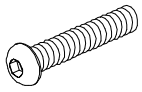 M8x35	2	6 909850	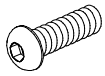 M8x25	8
7 909256	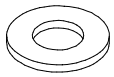 Ø16/8.4x1.6	8	8 980150	M8	6
9 909633	M8	4	10 980123	Ø7x60	4
11 905112	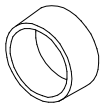 Ø22	4			

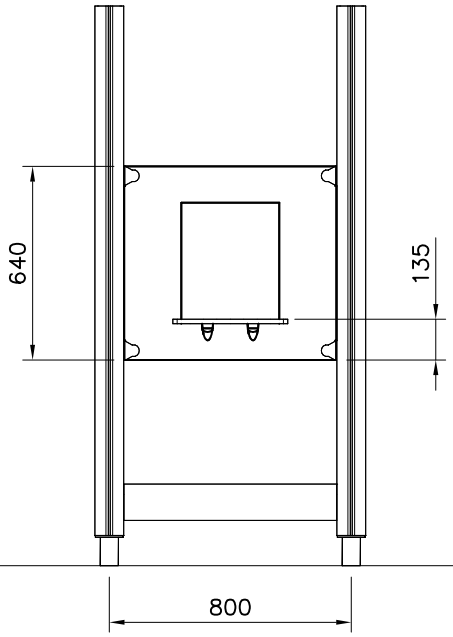

WALL OPTIONS		
706727 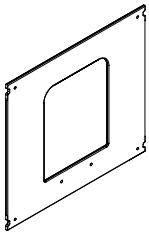 10x640x702	706727–701	BLUE
	706727–702	YELLOW
	706727–703	LIME
	706727–704	DARK GRAY
	706727–705	LIGHT GRAY
	706727–706	RED
	706727–707	GREEN
	706727–708	FUXIA

WALL OPTIONS		
706744 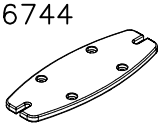 15x145x380	706744	DARK GRAY

Copyright Lappset Group Ltd

LAPPSET®

DESK

FINNO

DATE: 27.7.2015

DET 1

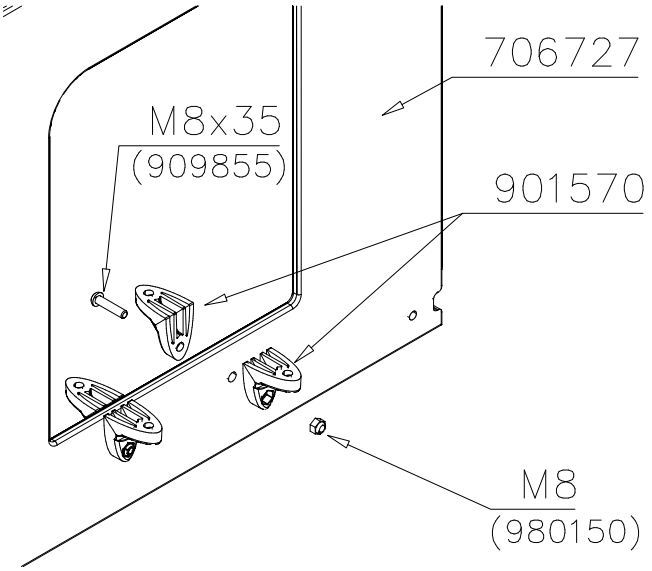

DET 2

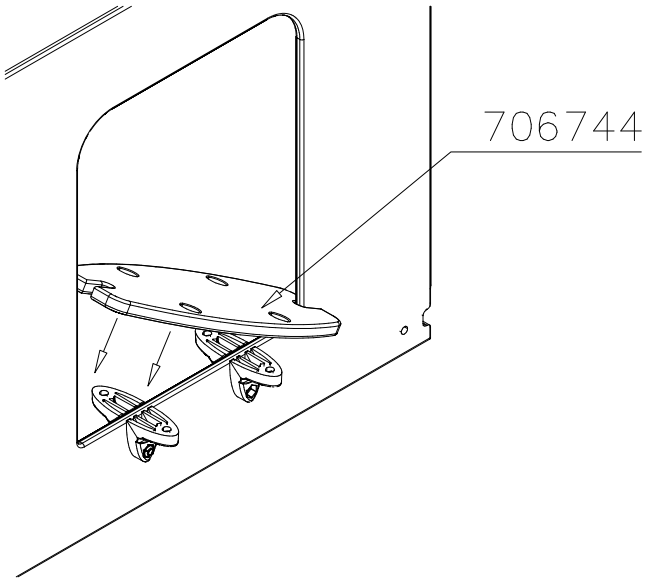

DET 3

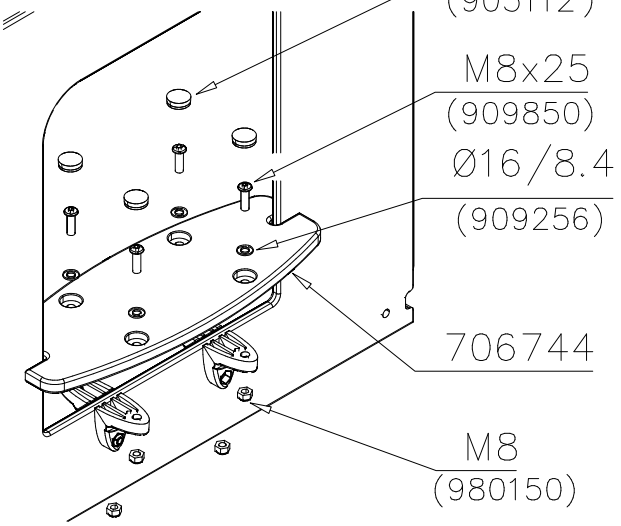

DET 4

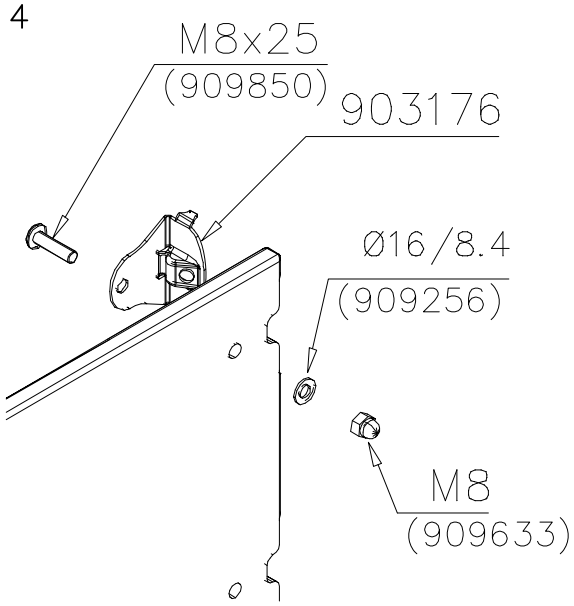

DET 5

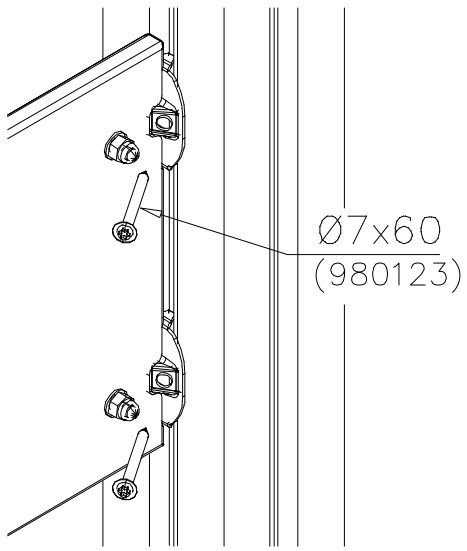

DET 6

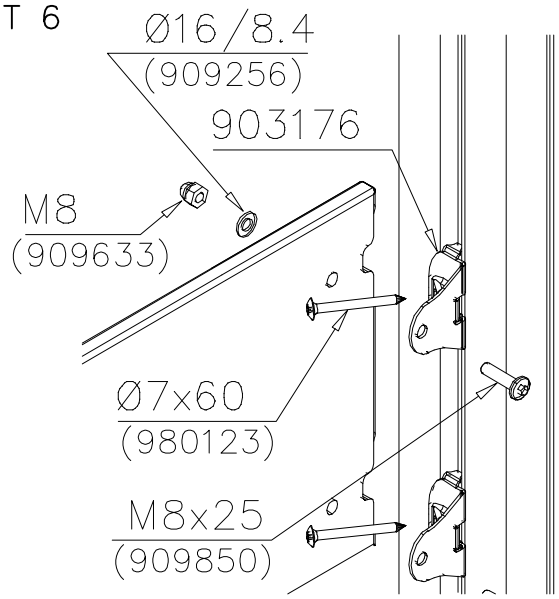

Copyright 1998 Lappset Group Ltd

LAPPSET®

RIDGE ROOF

FINNO

DATE: 27.5.2016

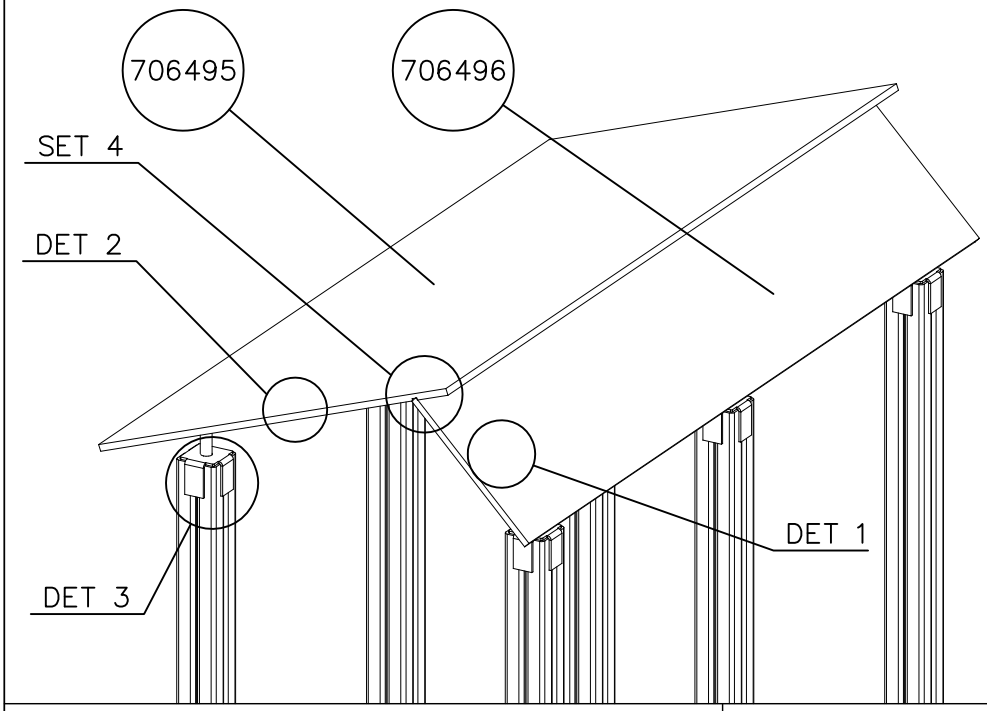

		PCS
1	706495 (10x900x1900)	1
2	706496 (10x390x1900)	1
3	907667	3
4	980123 (Ø7x60)	12
5	909256 (Ø16/8.4)	24
6	909633 (M8)	12

DET 1

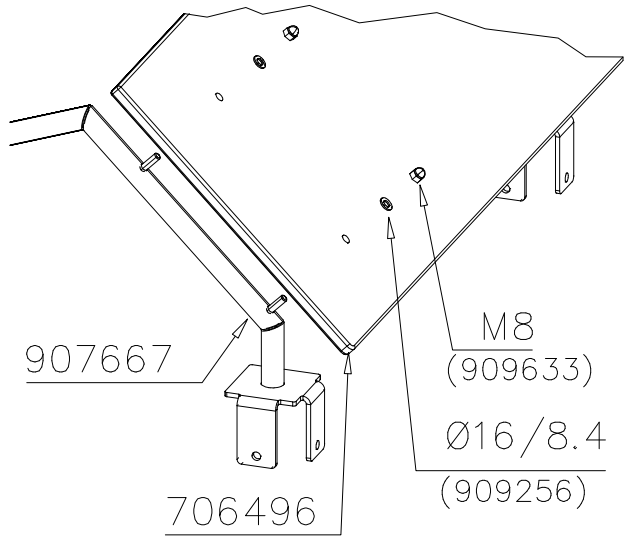

DET 2

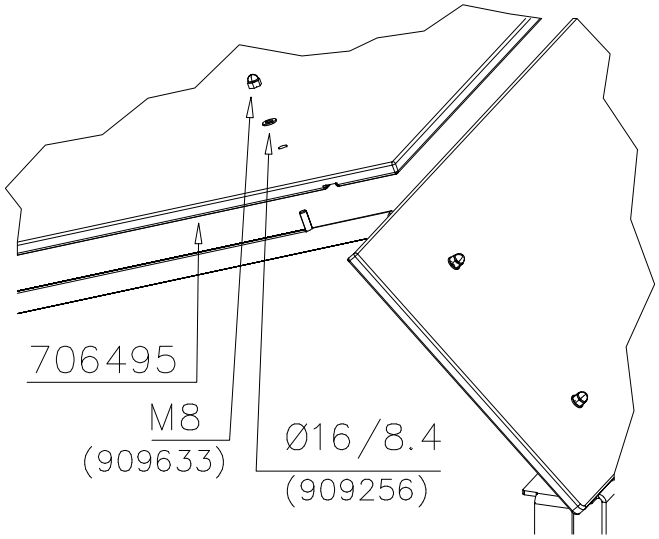

DET 3

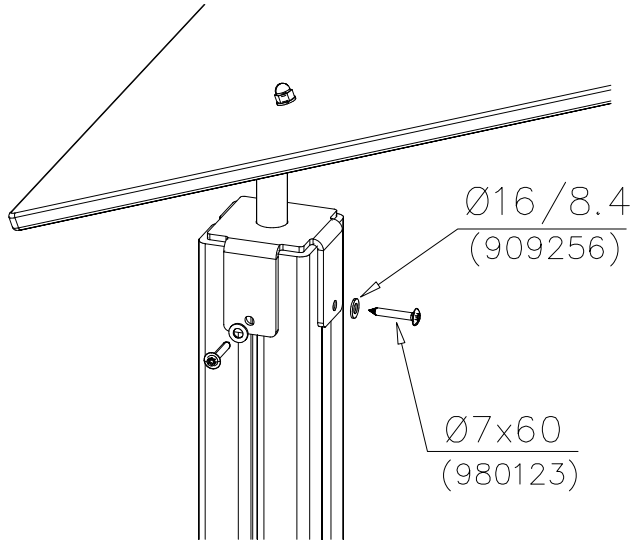

DET 4

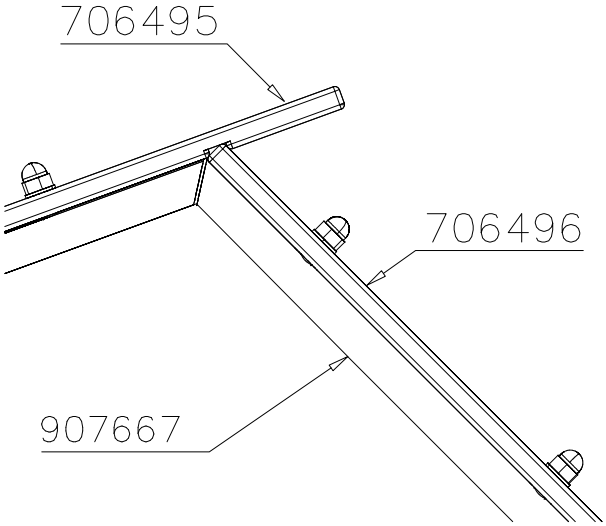

Copyright Lappset Group Ltd

LAPPSET®

BRIDGE

FINNO

DATE: 24.8.2015

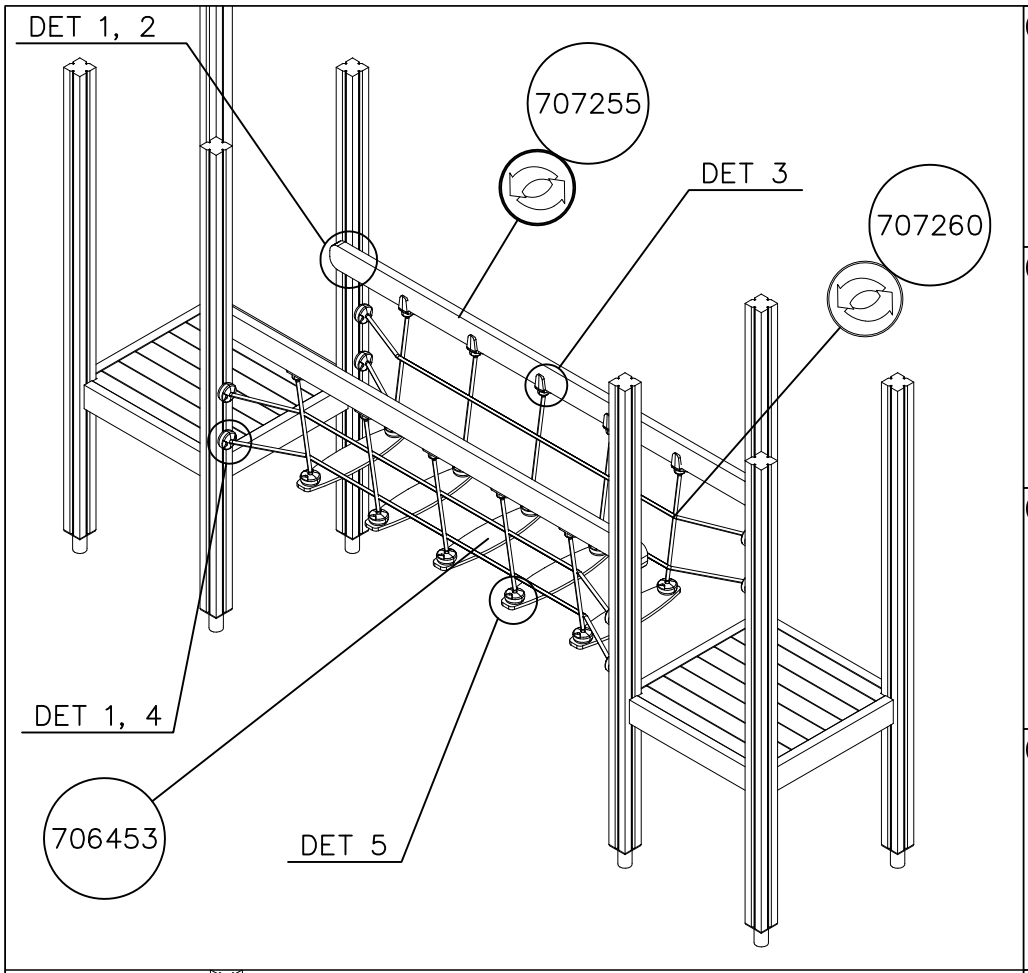

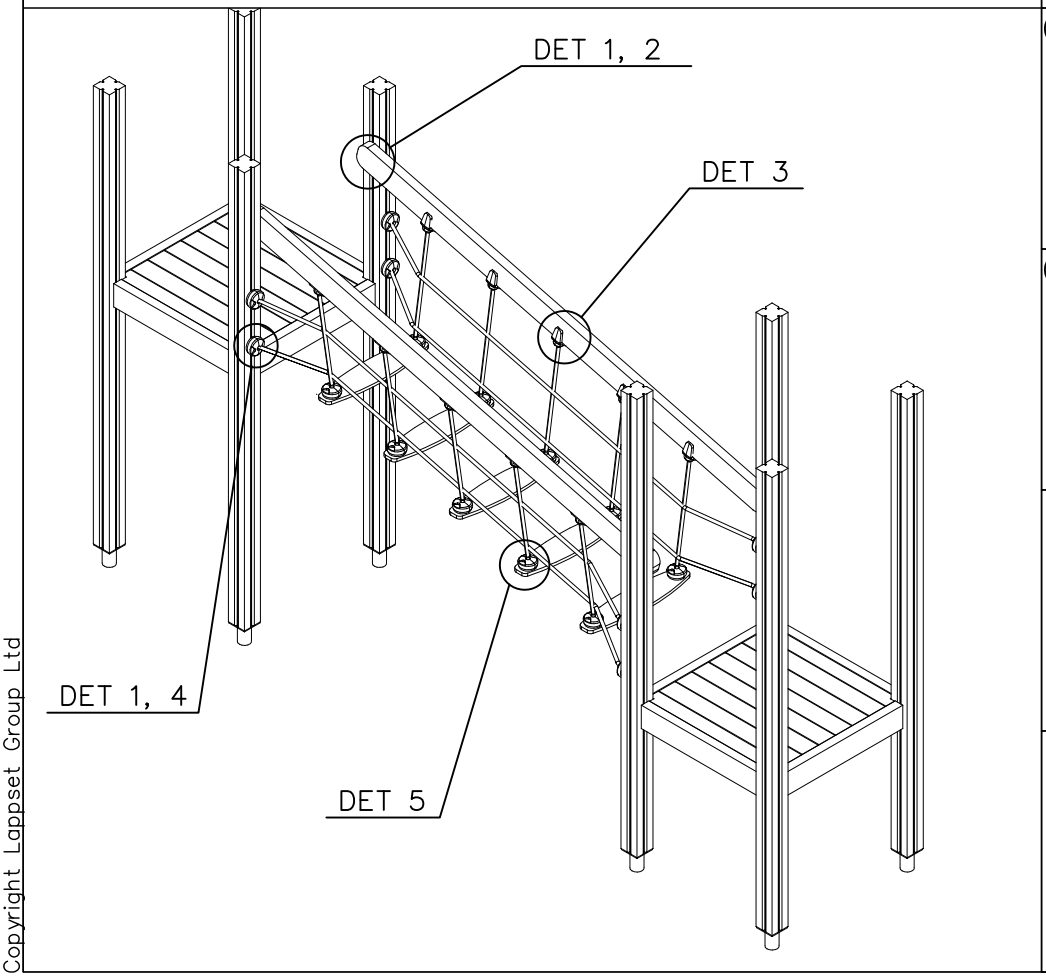

		PCS			PCS
1	706453	5	2	707255	2
	15x145x600			45x120x2480	
3	707260	2	4	905083	4
	2375x600			Ø32	
5	980151	4	6	909232	4
	Ø16/8.4			8x120	
7	905112	4	8	900240	16
	Ø22			Ø8x70	
9	980123	20	10	980128	10
	Ø7x60			Ø7x40	
11	980150	20	12	901899	20
	M8			M8x45	

Copyright Lappset Group Ltd

LAPPSET®

BRIDGE

FINNO

DATE: 24.8.2015

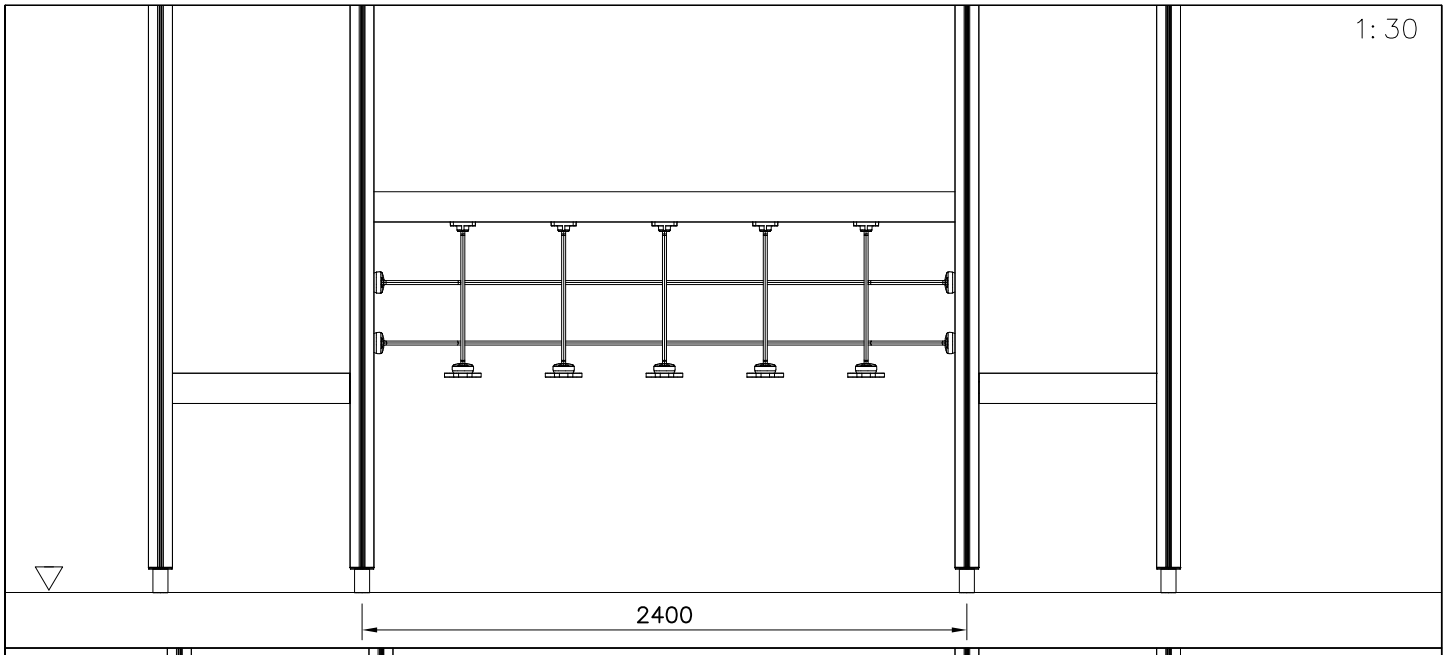

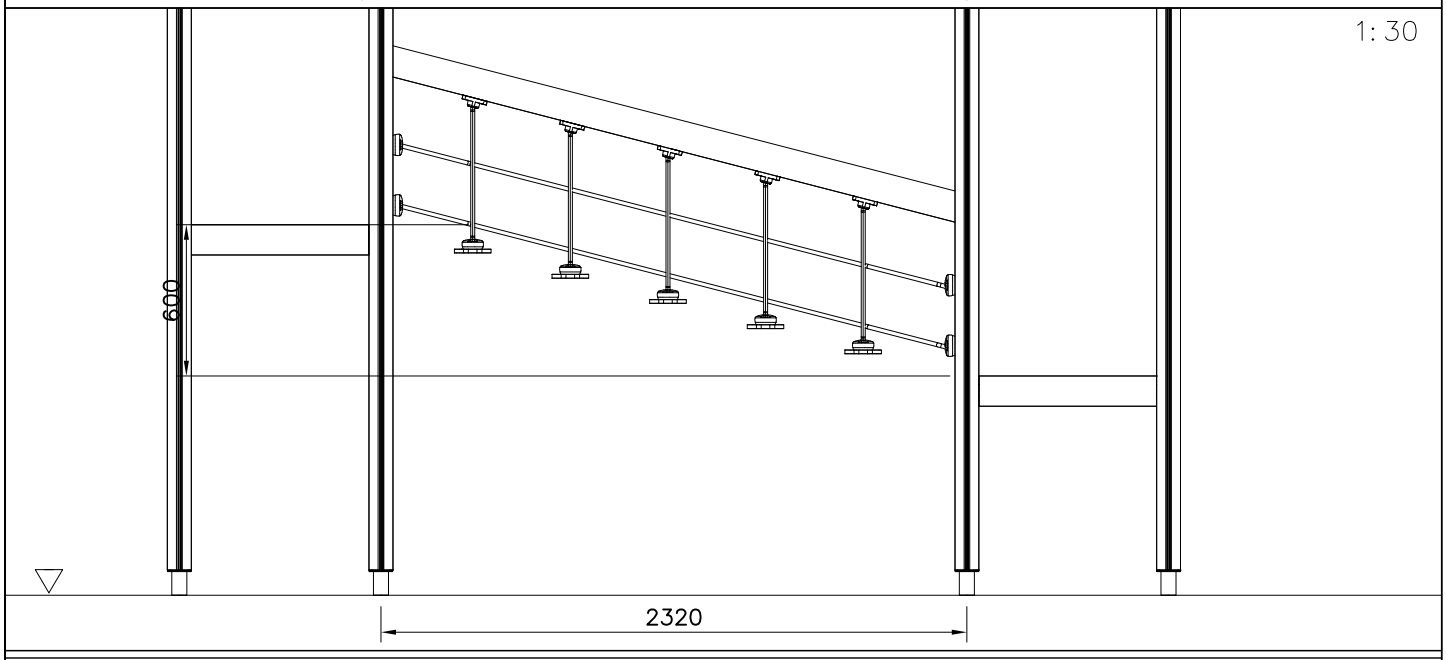

NET OPTIONS

707260

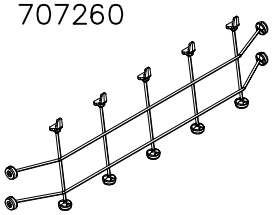

2375x600

707260–301	BLUE
707260–302	RED
707260–303	BEIGE
707260–304	GRAY
707260–305	BLACK
707260–306	YELLOW

RAILING OPTIONS

707255

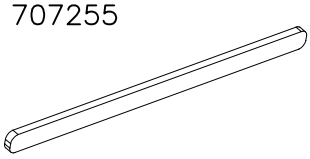

45x120x2480

707255–605	DARK GRAY	707255–609	GREEN
707255–606	GRAY	707255–610	YELLOW
707255–607	RED	707255–611	LIME
707255–608	BLUE	707255–612	FUXIA

Copyright 1998 Lappset Group Ltd

LAPPSET®

BRIDGE

FINNO

DATE: 24.8.2015

DET 1

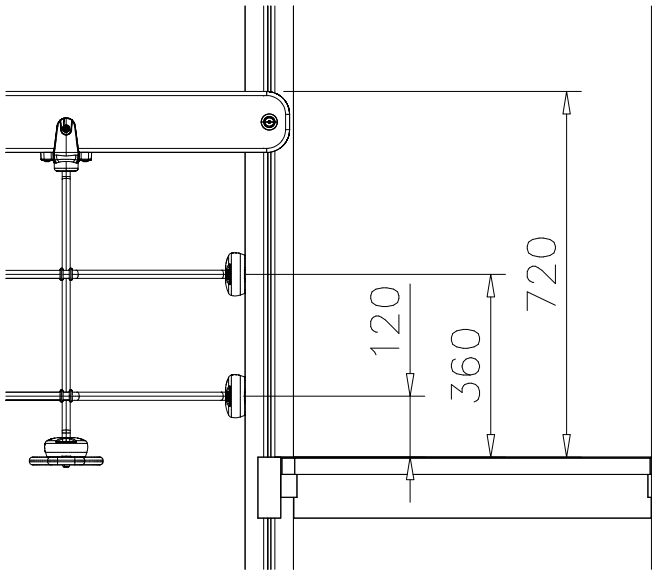

DET 2

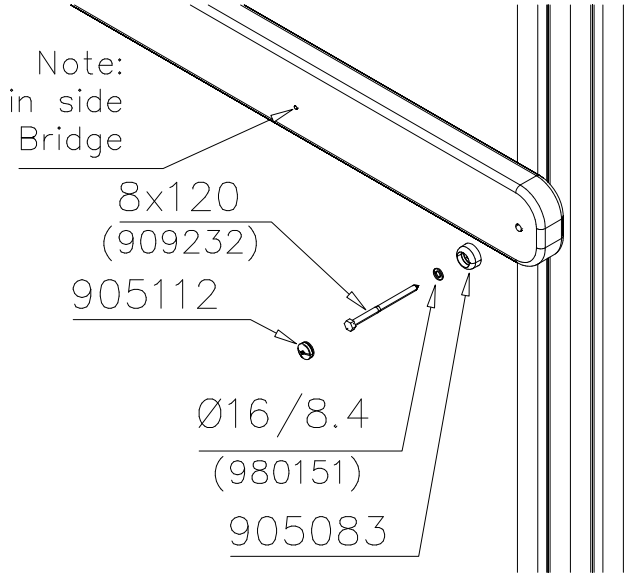

DET 3

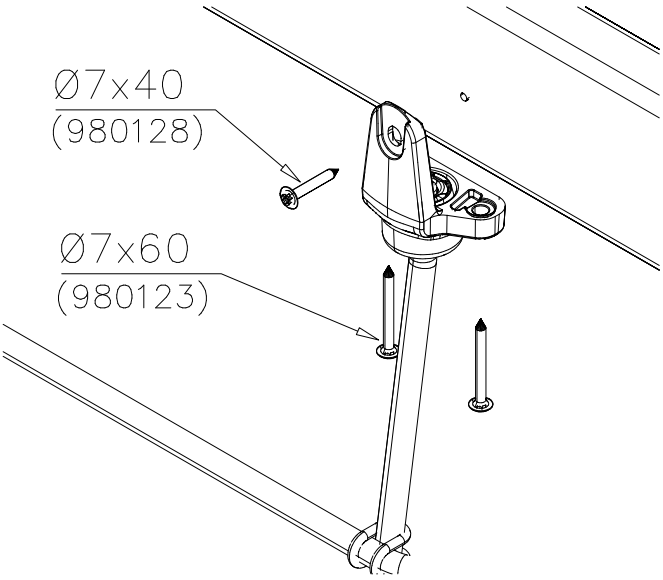

DET 4

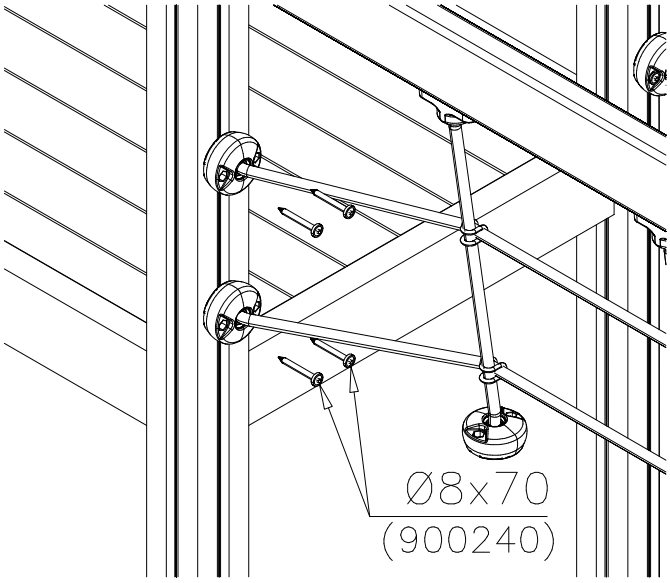

DET 5

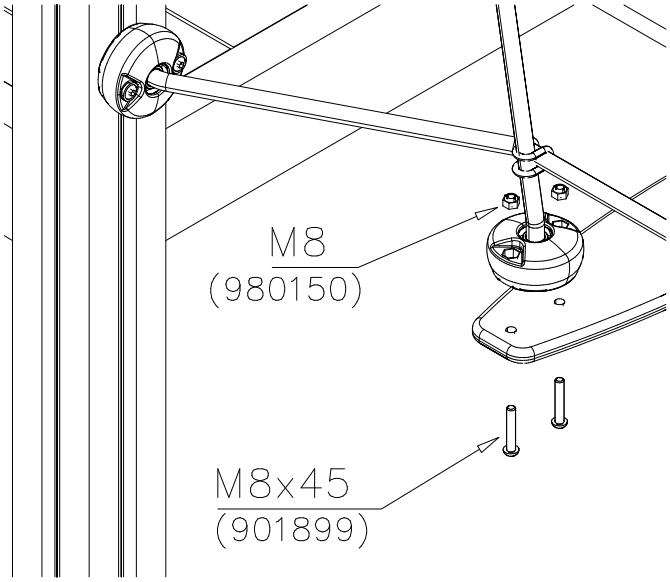

DET 6

Copyright 1998 Lappset Group Ltd

LAPPSET®

PLANE

FINNO

DATE: 25.8.2015

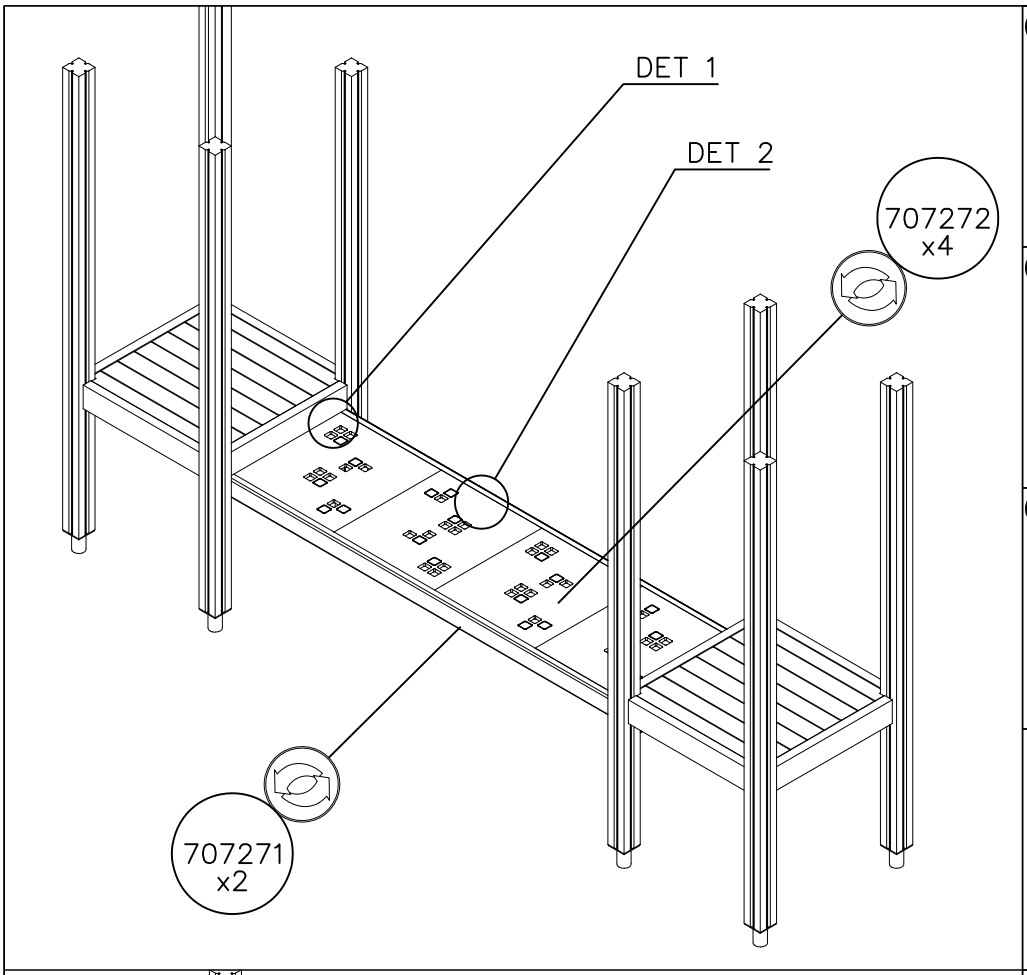

1 707271 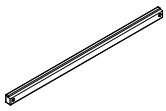 70x95x2480	PCS 2	
2 707272 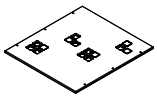 15x630x590	PCS 4	
3 980154 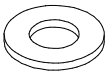 Ø24/13	PCS 4	
4 909224 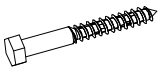 12x100	PCS 4	
5 905103 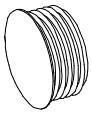 PT-28/32-H	PCS 4	
6 980123 Ø7x60	PCS 24	
	PCS	
	PCS	
	PCS	
	PCS	
	PCS	
	PCS	

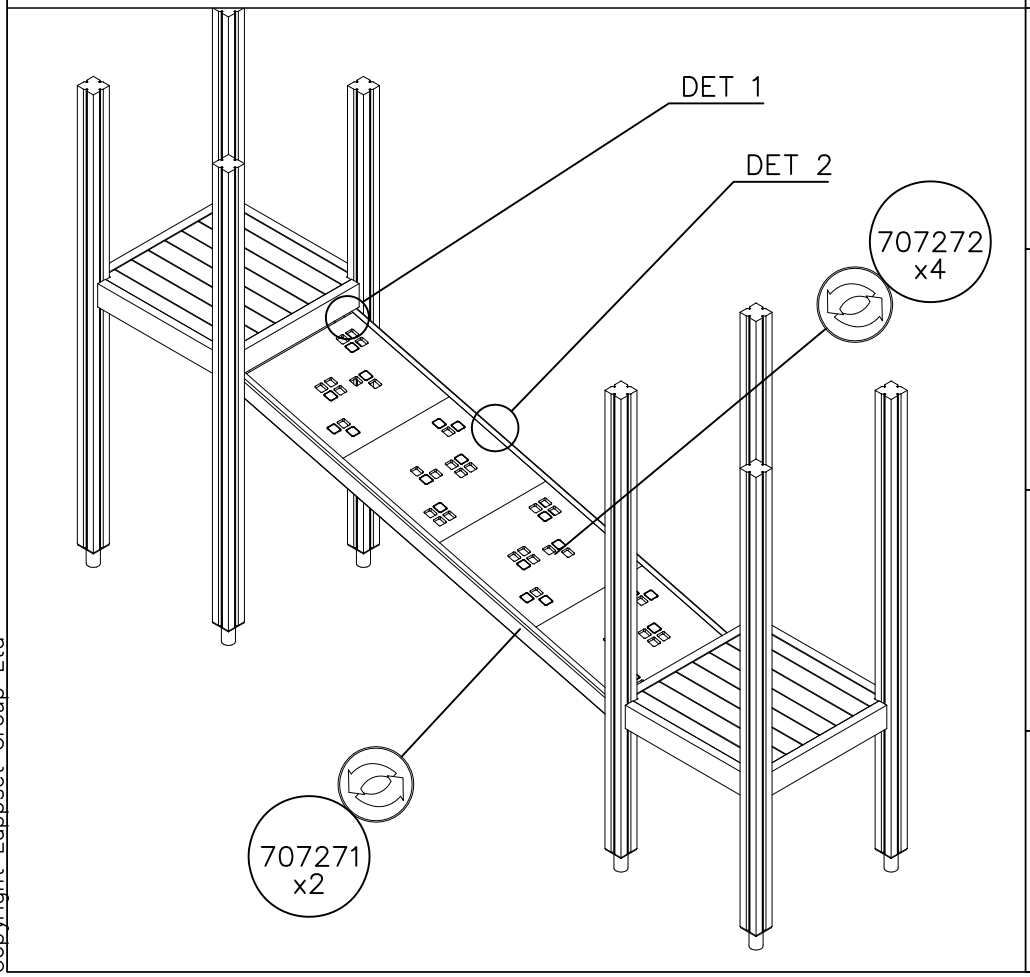

Copyright Lappset Group Ltd

LAPPSET®

PLANE

FINNO

DATE: 25.8.2015

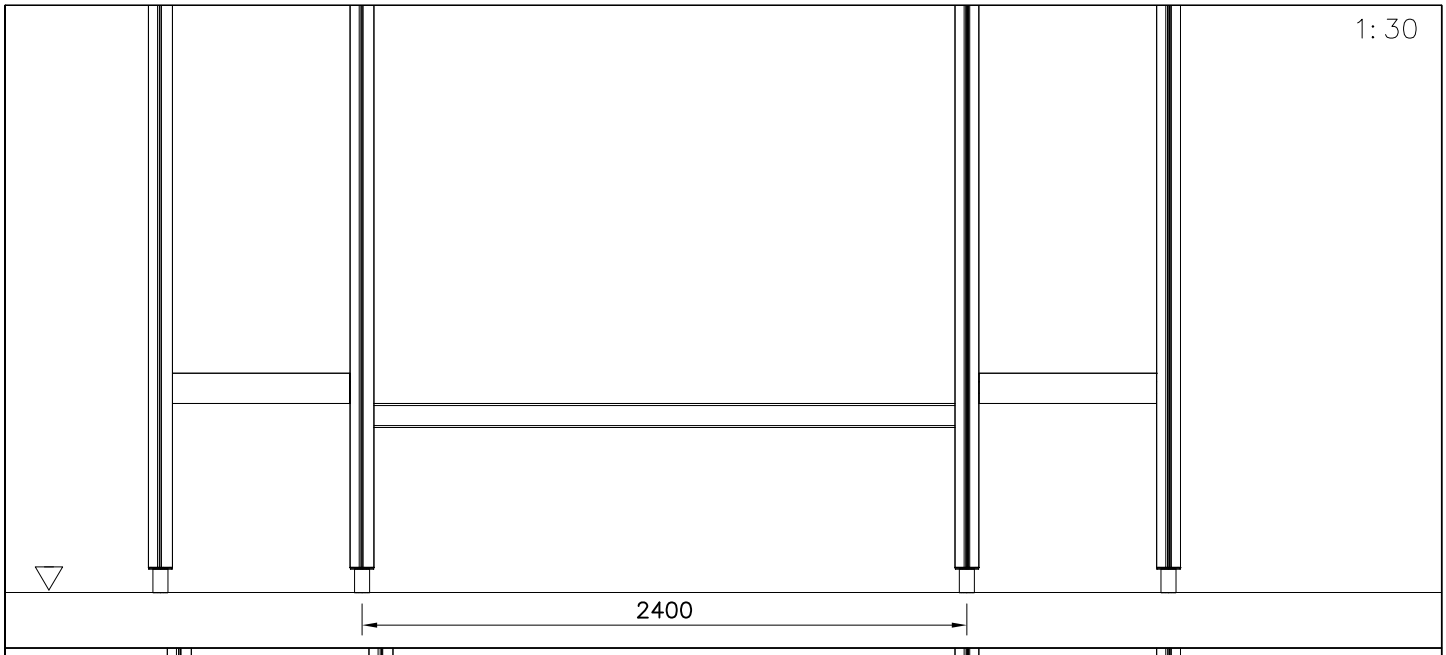

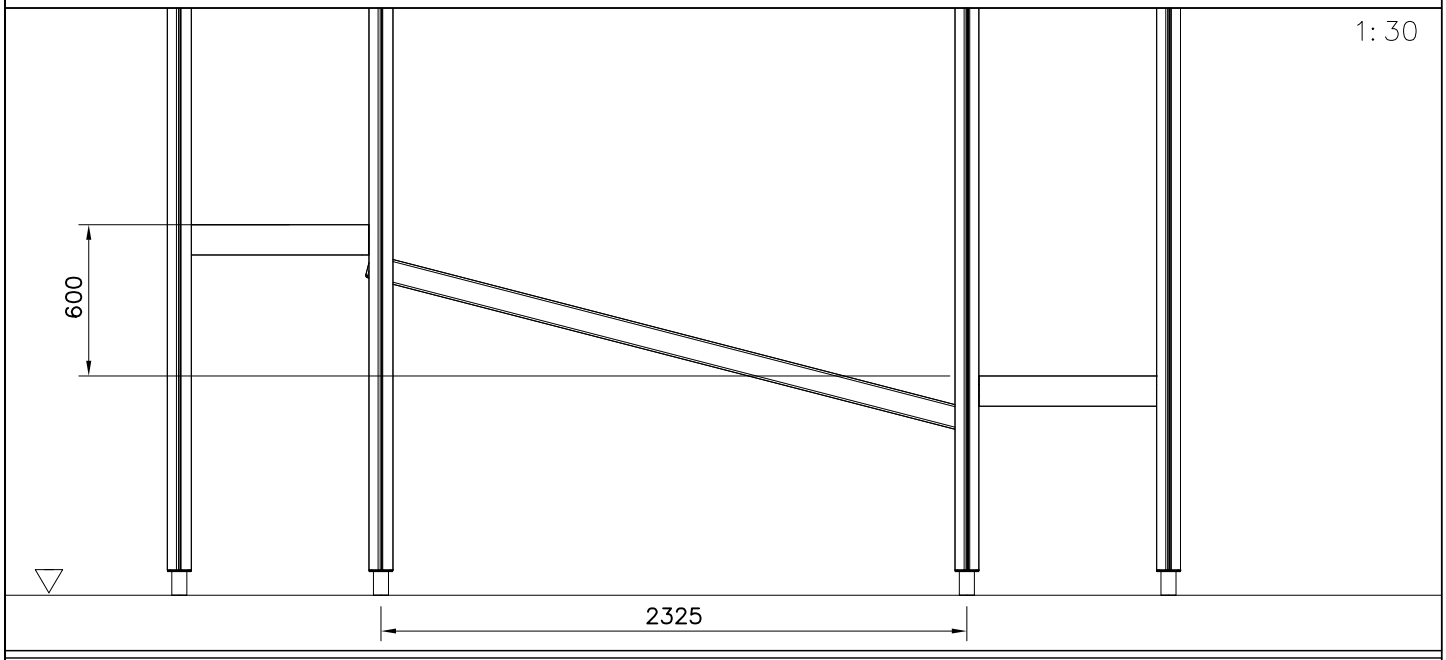

PLATE OPTIONS

707272

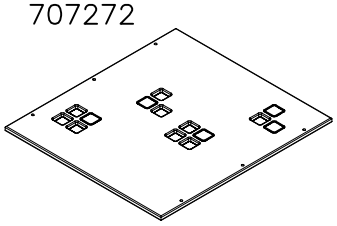

15x630x590

707272–701	BLUE	707272–707	GREEN
707272–702	YELLOW	707272–708	FUXIA
707272–703	LIME		
707272–704	DARK GRAY		
707272–705	GRAY		
707272–706	RED		

BOOM OPTIONS

707271

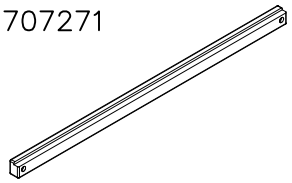

70x95x2480

707271–602	DARK BROWN
707271–603	LIGHT BROWN
707271–604	LIGHT GRAY

Copyright 1998 Lappset Group Ltd

LAPPSET®

PLANE

FINNO

DATE: 25.8.2015

DET 1

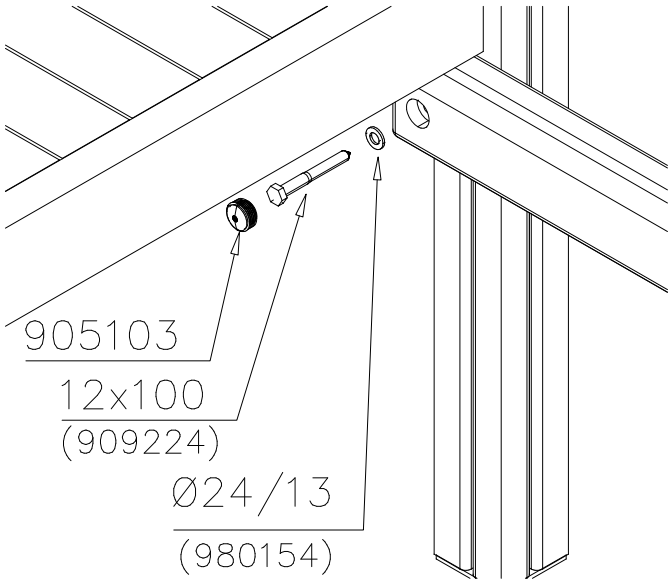

DET 2

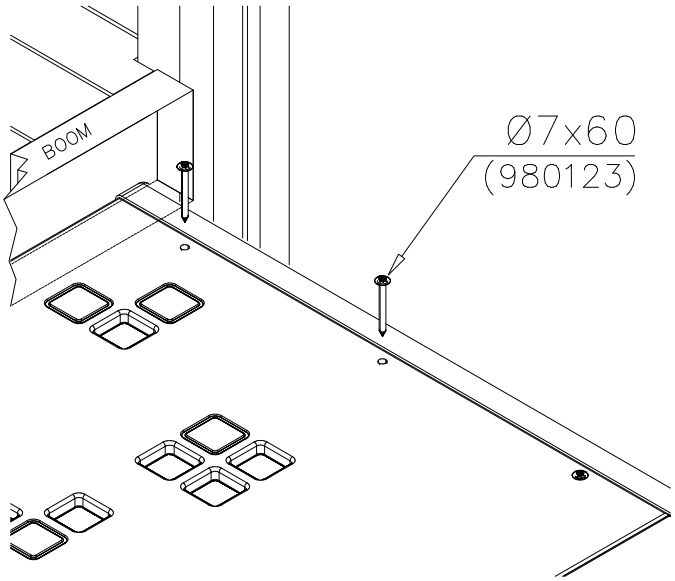

DET 3

DET 4

DET 5

DET 6

Copyright 1998 Lappset Group Ltd

LAPPSET®

707333

FINNO

DATE: 19.12.2018

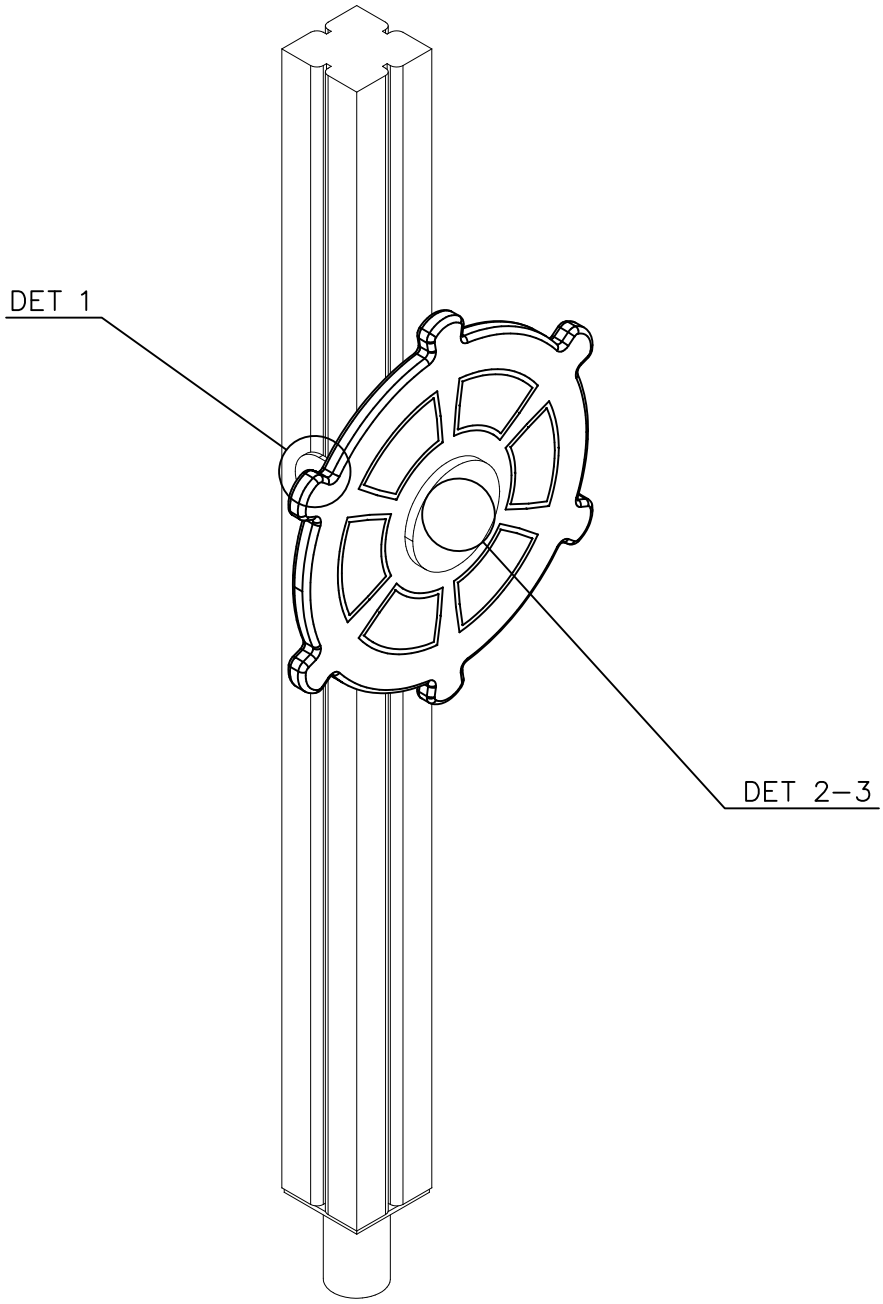

1	900240	PCS	2	2	909209	PCS	1
	Ø8x70				Ø17.3x2.4		
3	909644	PCS	1	4	980106	PCS	2
	M12				Ø5x40		
5	980165	PCS	1			PCS	
	Ø24/13x3						
		PCS				PCS	
		PCS				PCS	
◯	707320	PCS	1	◯	905879	PCS	1

DET 1

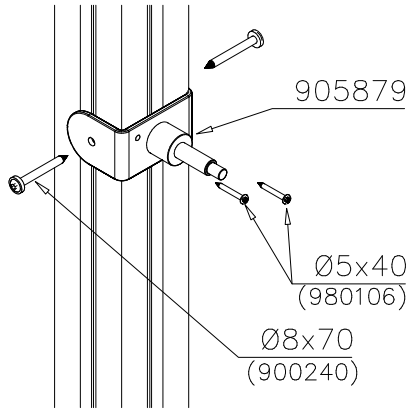

DET 2

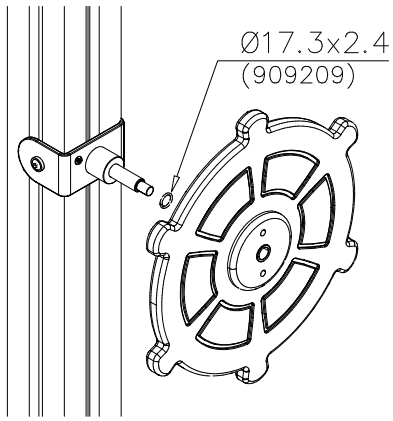

DET 3

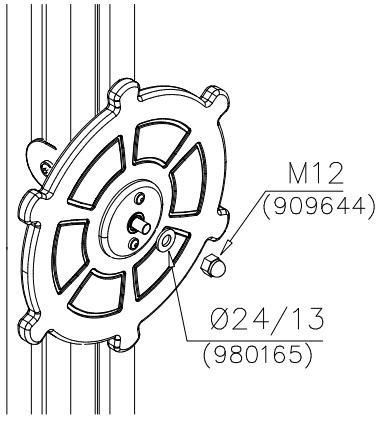

Copyright Lappset Group Ltd

LAPPSET®

707373

FINNO

DATE: 14.12.2022

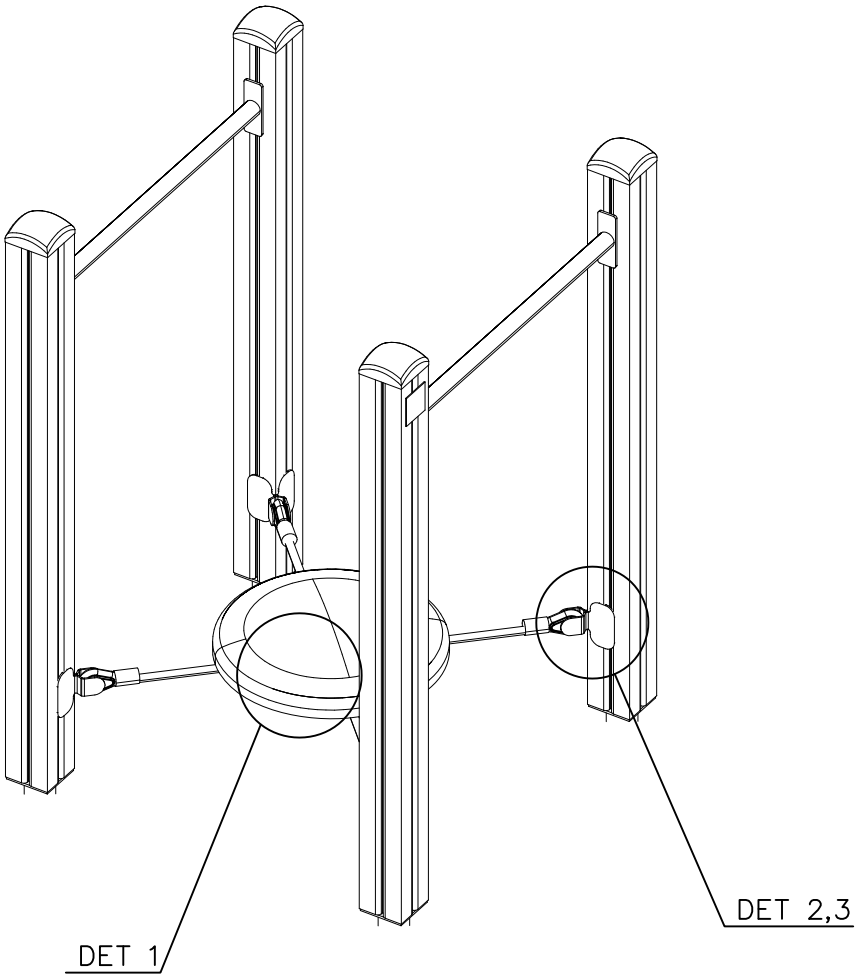

		PCS			PCS
1	929561	8	2	909568 M8x55	4
3	901104 M8x80	4	4	900240 Ø8x70	16
5	905083 Ø32	8	6	909256 Ø16/8.4	28
7	980152 Ø24/8.4	4	8	980160 M8	4
9	905112 Ø22	8	10	909633 M8	4

DET 1

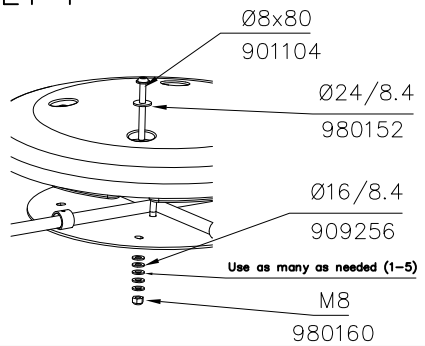

DET 3

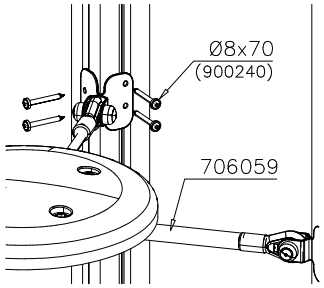

DET 2

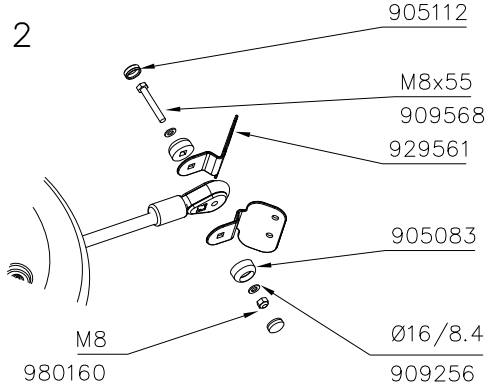

Copyright Lappset Group Ltd

LAPPSET®

707419

FINNO

DATE: 15.3.2016

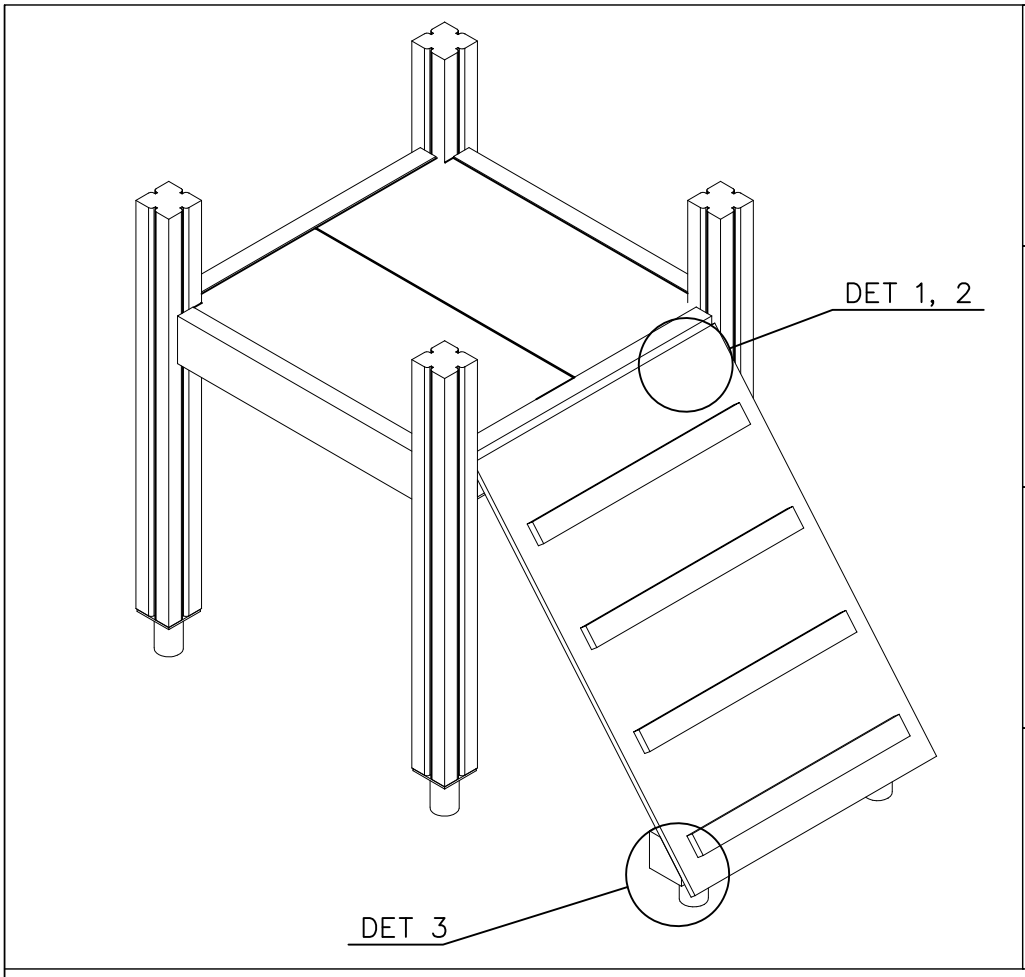

		PCS			PCS
1	980128 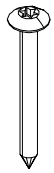 Ø7x40	8	2	900240 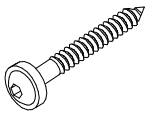 Ø8X70	4
3	909852 M8x30	3	4	909256 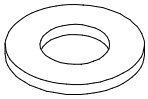 Ø16/8.4x1.6	7
5	909633 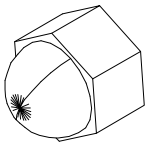 M8	3			

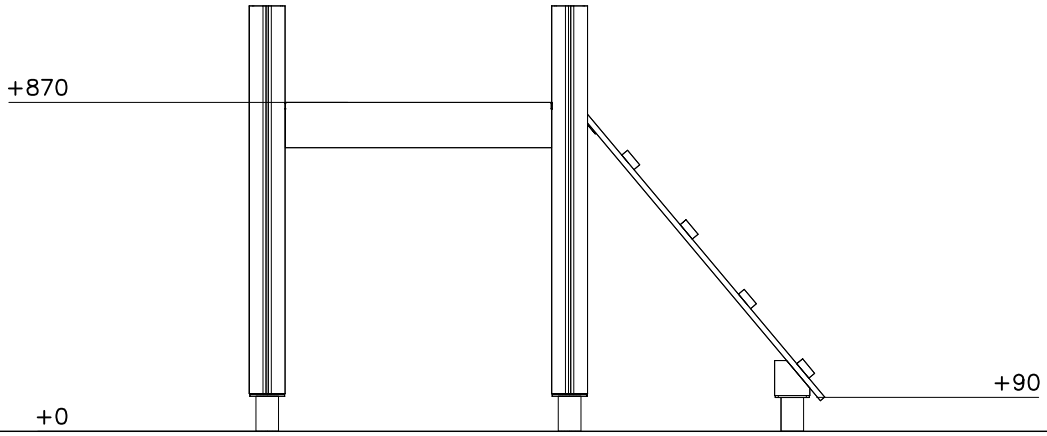

Copyright Lappset Group Ltd

LAPPSET®

707419

FINNO

DATE: 15.3.2016

CLIMB OPTIONS

707418

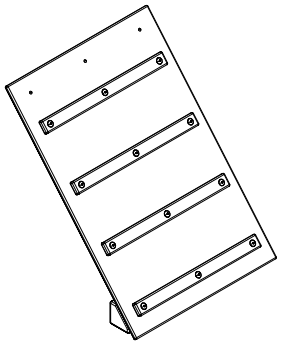

700x1000

707418–701	BLUE
707418–702	YELLOW
707418–703	LIME
707418–704	DARK GREY
707418–705	GREY
707418–706	RED
707418–707	GREEN
707418–708	FUCHSIA

DET 1

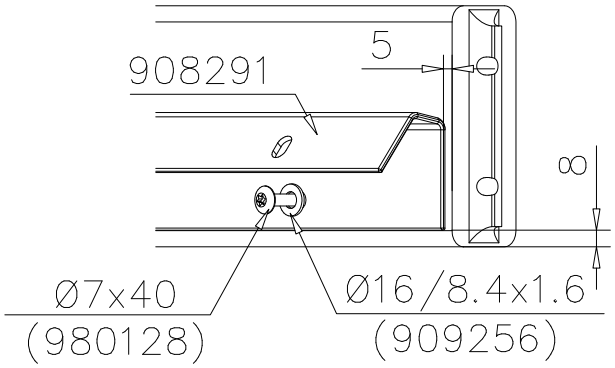

DET 2

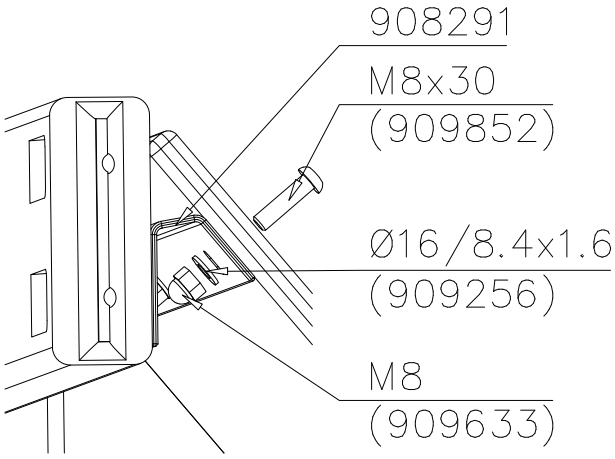

DET 3

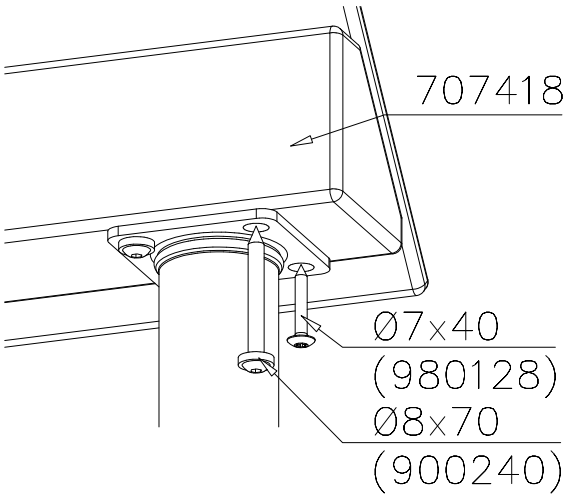

Copyright 1998 Lappset Group Ltd

LAPPSET®

707440

FINNO

DATE: 23.3.2016

OPTIO 1

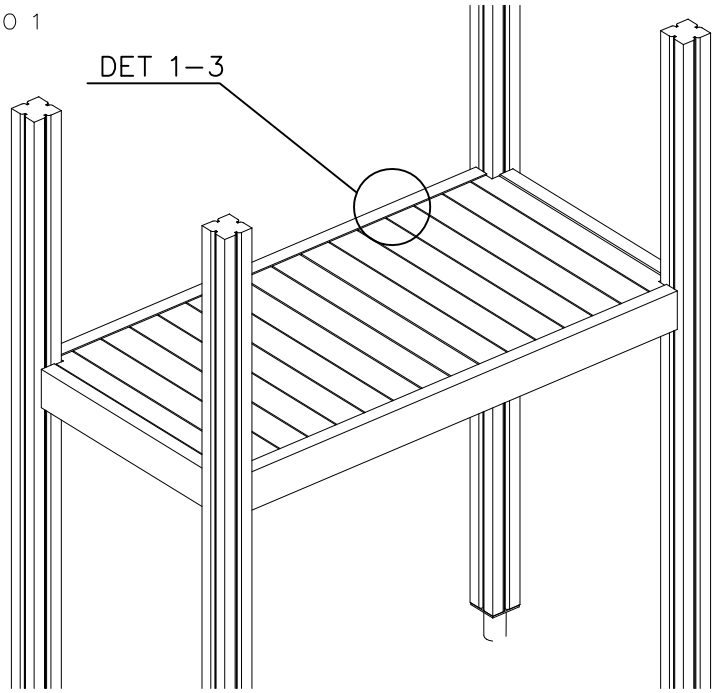

OPTIO 2

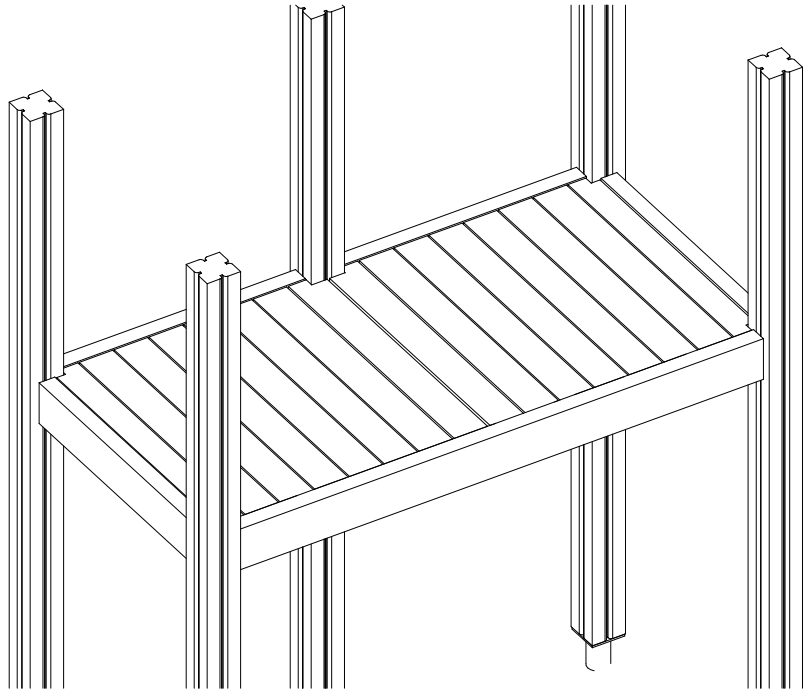

1 900240 Ø8x70	PCS 12	2 980101 Ø4.5x70	PCS 16
	PCS		PCS
	PCS		PCS
706443 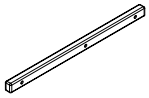 32x45x702	PCS	707435 750x770	PCS
707436 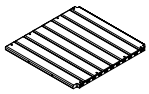 750x770	PCS	707437 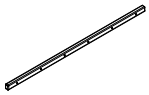 32x45x1502	PCS
	PCS	707441 750x770	PCS

DET 1

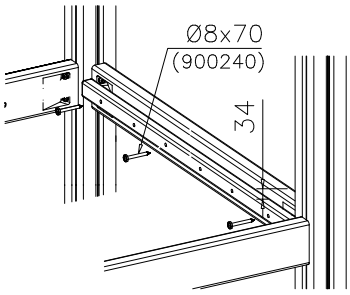

DET 2

Naulanauha kannatinlistan puolelle.
Nail list to the bottom.

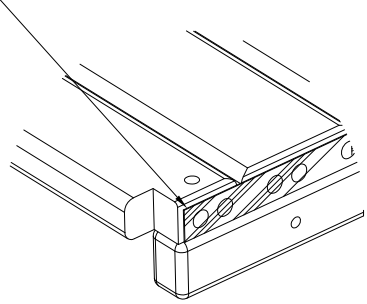

DET 3

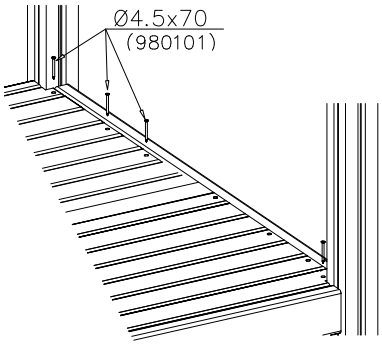

Copyright Lappset Group Ltd

LAPPSET®

707515

FINNO

DATE: 14.10.2016

		PCS
1	900240 Ø8x70	12
2	980102 Ø5x40	14

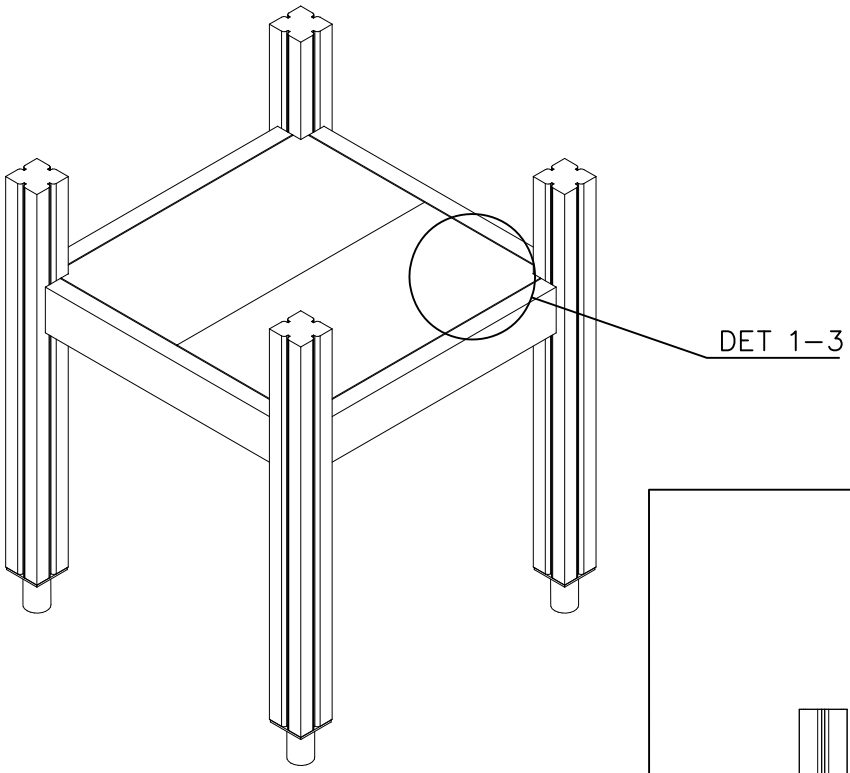

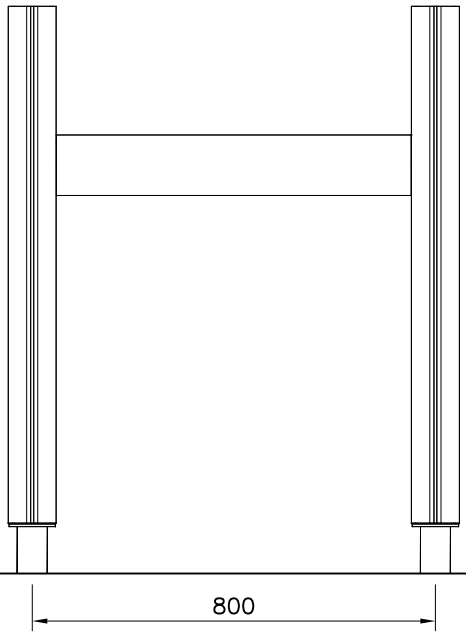

FLOOR OPTIONS

707327

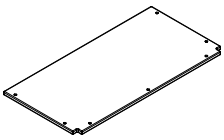

15x375x750

707327–701	BLUE
707327–702	YELLOW
707327–703	LIME
707327–704	DARK GRAY
707327–705	LIGHT GRAY
707327–706	RED
707327–707	GREEN
707327–708	FUXIA

DET 1

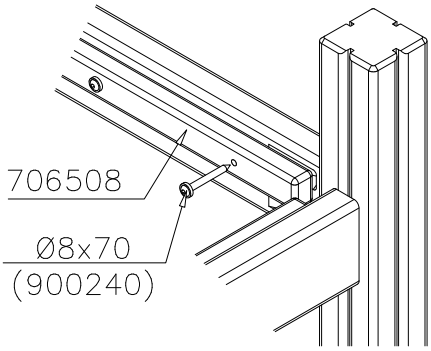

DET 2

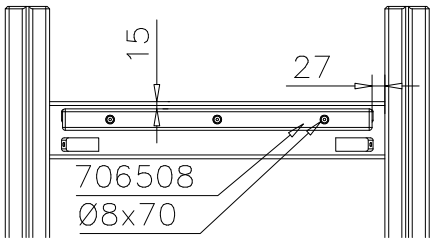

DET 3

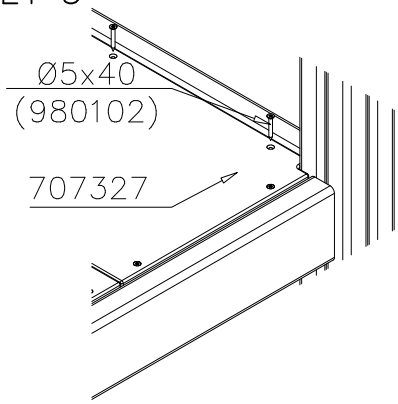

Copyright Lappset Group Ltd

LAPPSET®

707585

FINNO

DATE: 15.3.2016

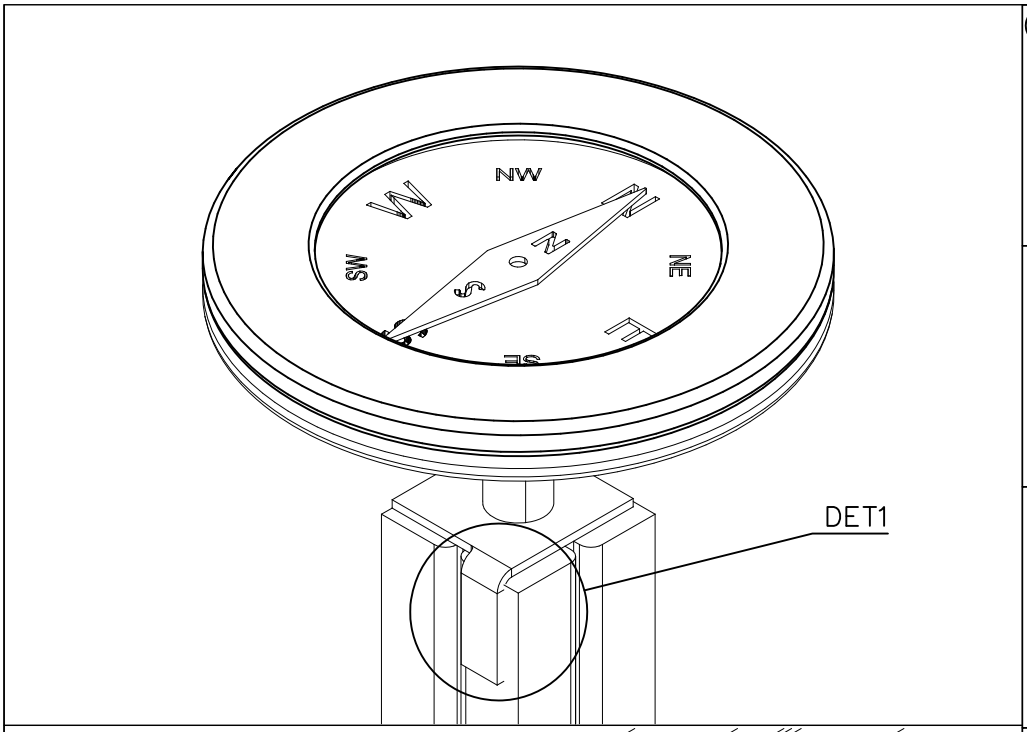

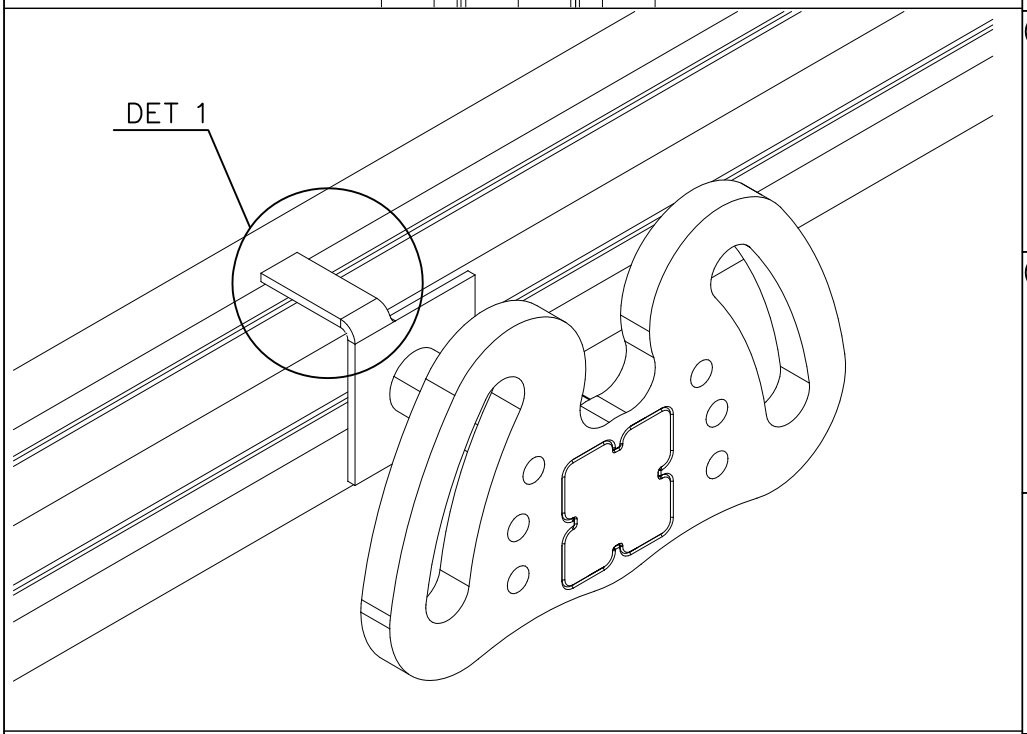

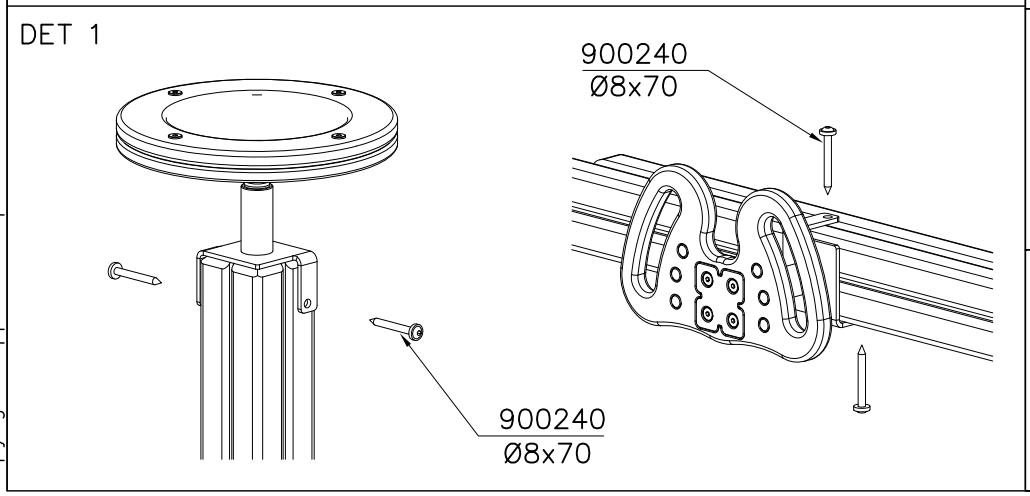

1 900240 Ø8x70	PCS 2		PCS
	PCS		PCS
	PCS		PCS
707302	PCS 1	707303	PCS 1
707304	PCS 1	707305	PCS 1
	PCS		PCS
	PCS		PCS
	PCS		PCS

Copyright Lappset Group Ltd

LAPPSET®

707588

FINNO

DATE: 11.10.2016

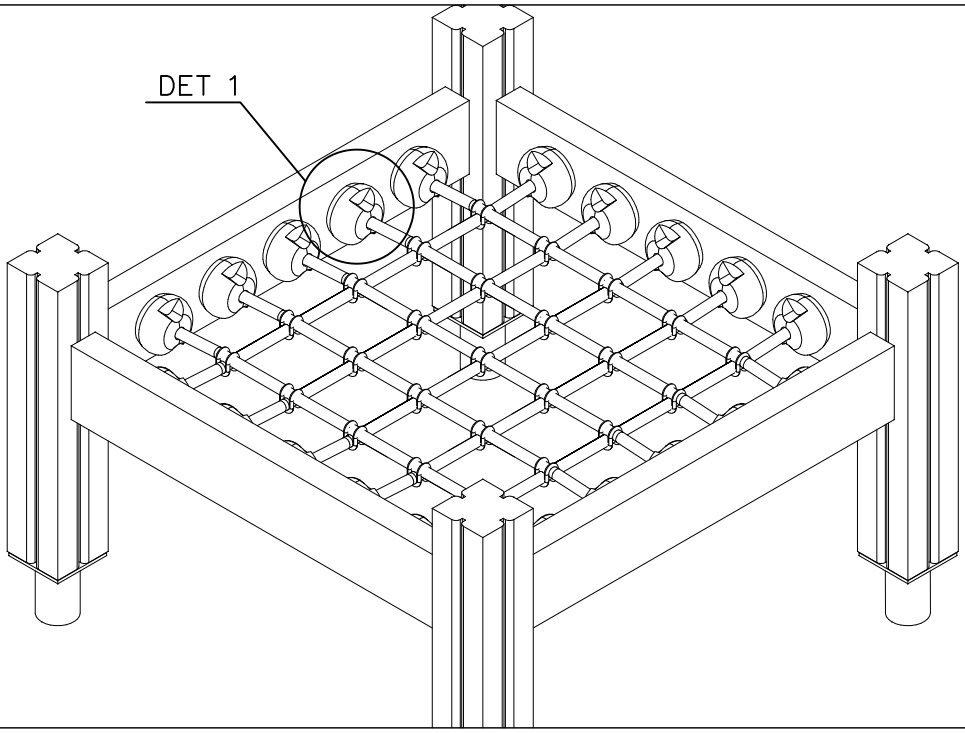

1	980123	PCS	2	909256
	Ø7x60	40		Ø16/8.4
		PCS		PCS
		PCS		707590
				755x755
		PCS		PCS
		PCS		PCS

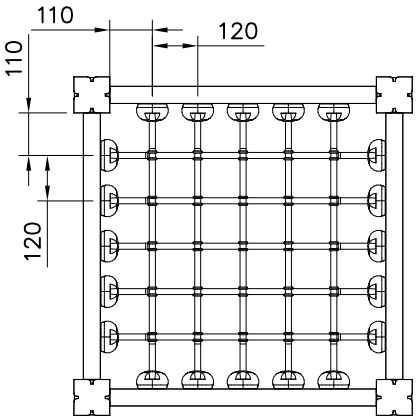

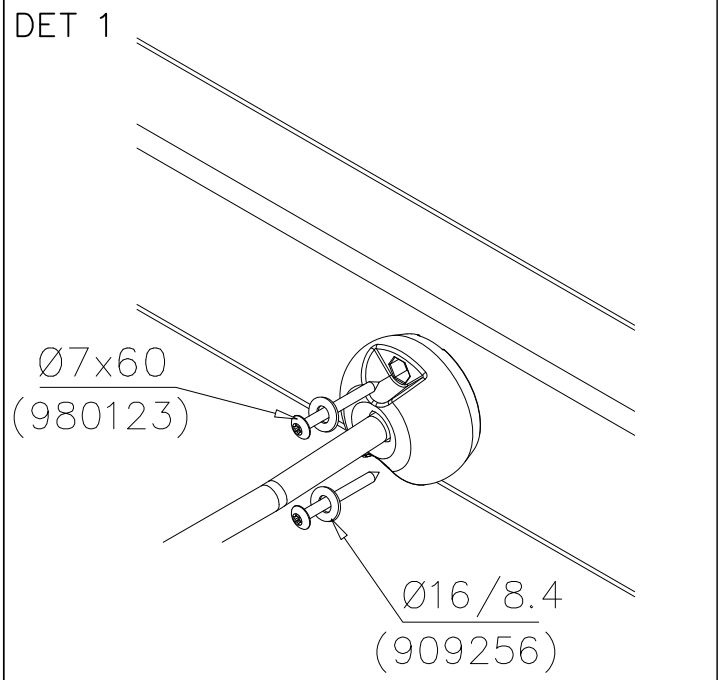

Copyright Lappset Group Ltd

LAPPSET®

707589

FINNO

DATE: 31.1.2017

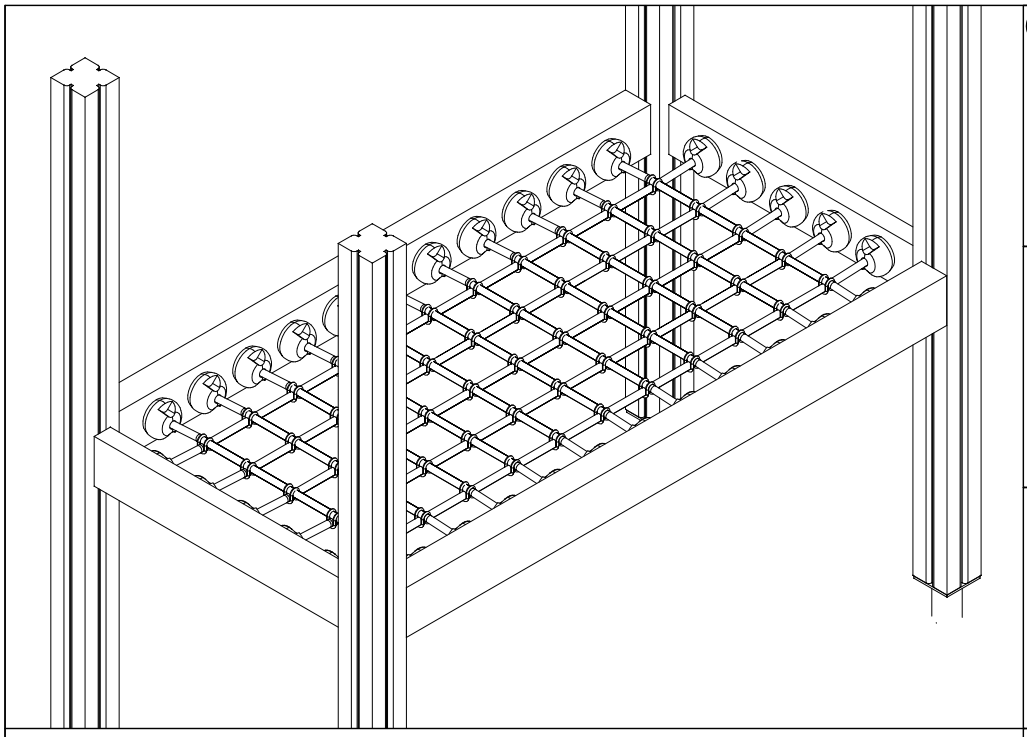

1	980123 Ø7x60	PCS 64	2 909256 Ø16/8.4	PCS 64
		PCS		PCS
		PCS	707595 755x1555	PCS
		PCS		PCS
		PCS		PCS

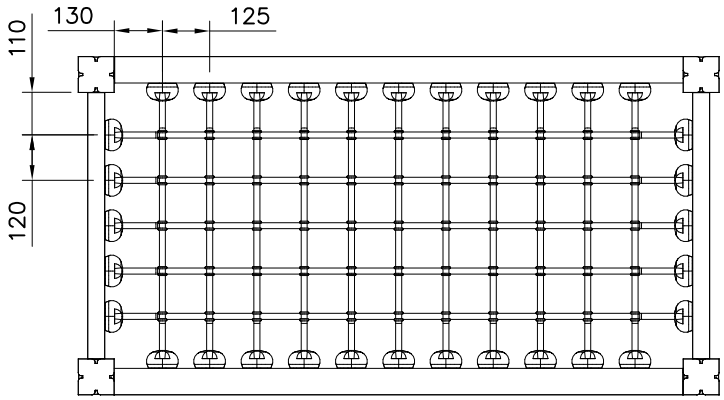

DET 1

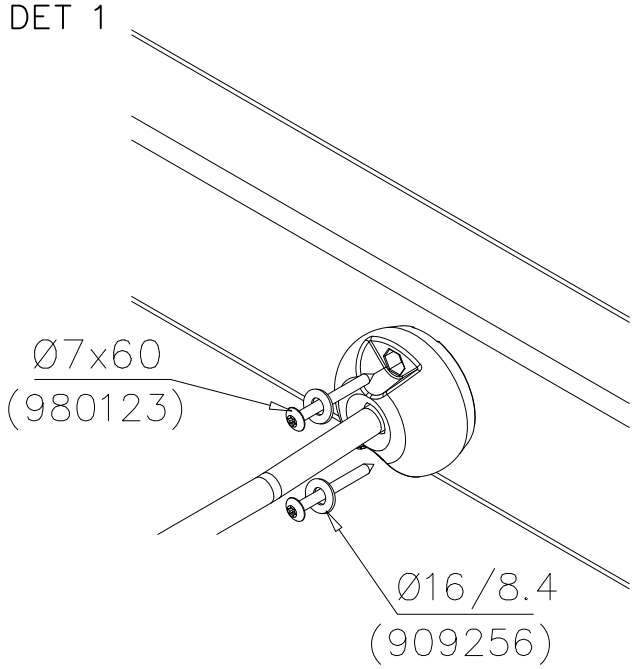

Copyright Lappset Group Ltd

LAPPSET®

707615

FINNO

DATE: 3.6.2016

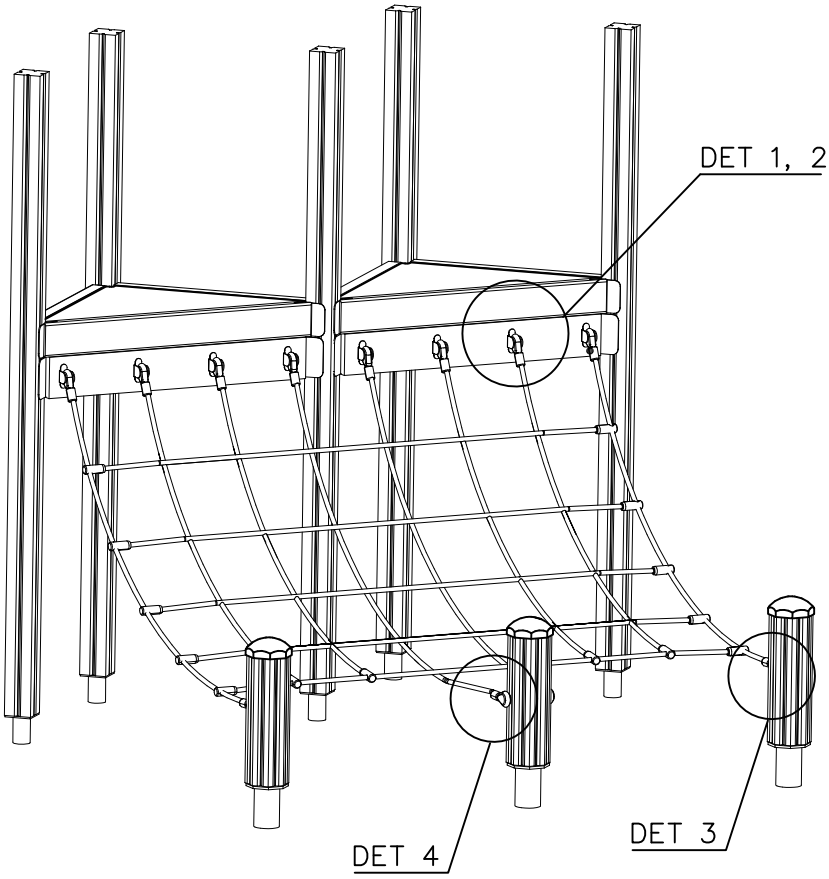

		PCS			PCS
1	901899	16	2	905051	16
	M8x45			Ø24/8.4	
3	980150	16	4	905103	16
	M8			PT-28/32-H	
6	903093	6	7	909256	16
	Ø8x90			Ø16/8.4	

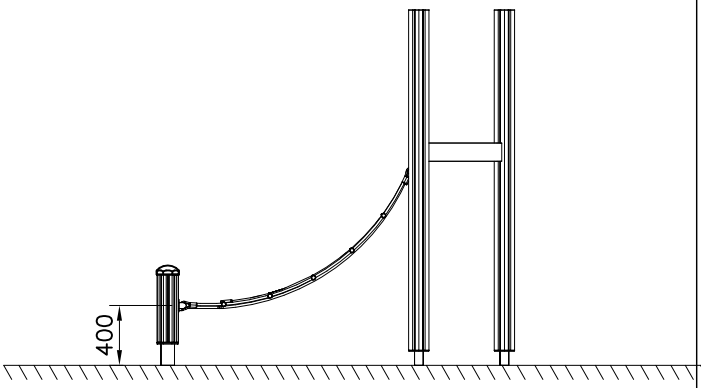

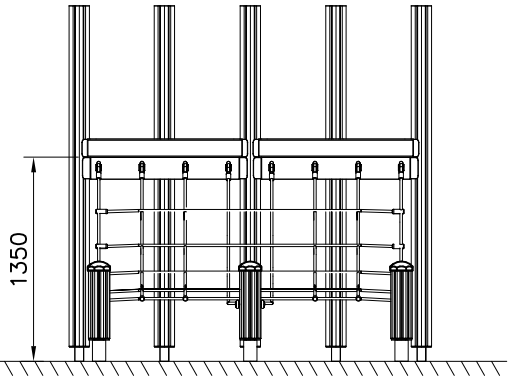

Copyright Lappset Group Ltd

LAPPSET®

707615

FINNO

3.6.2016

DET 1

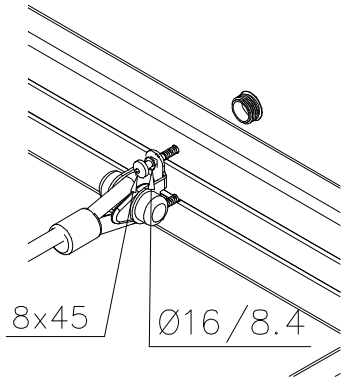

DET 2

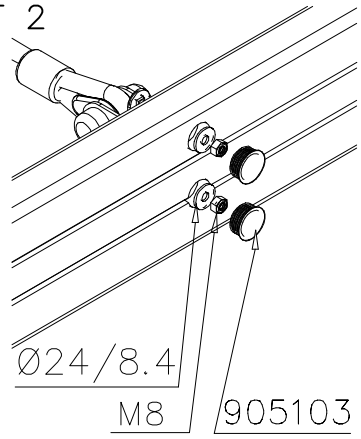

DET 3

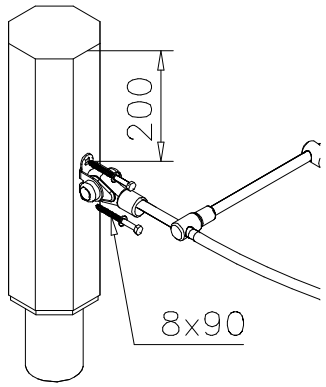

DET 4

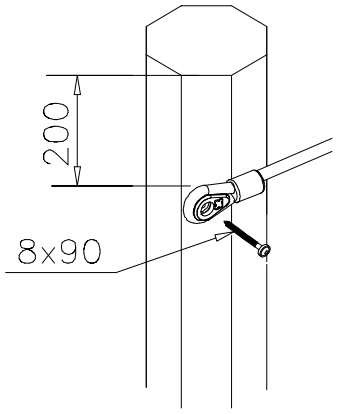

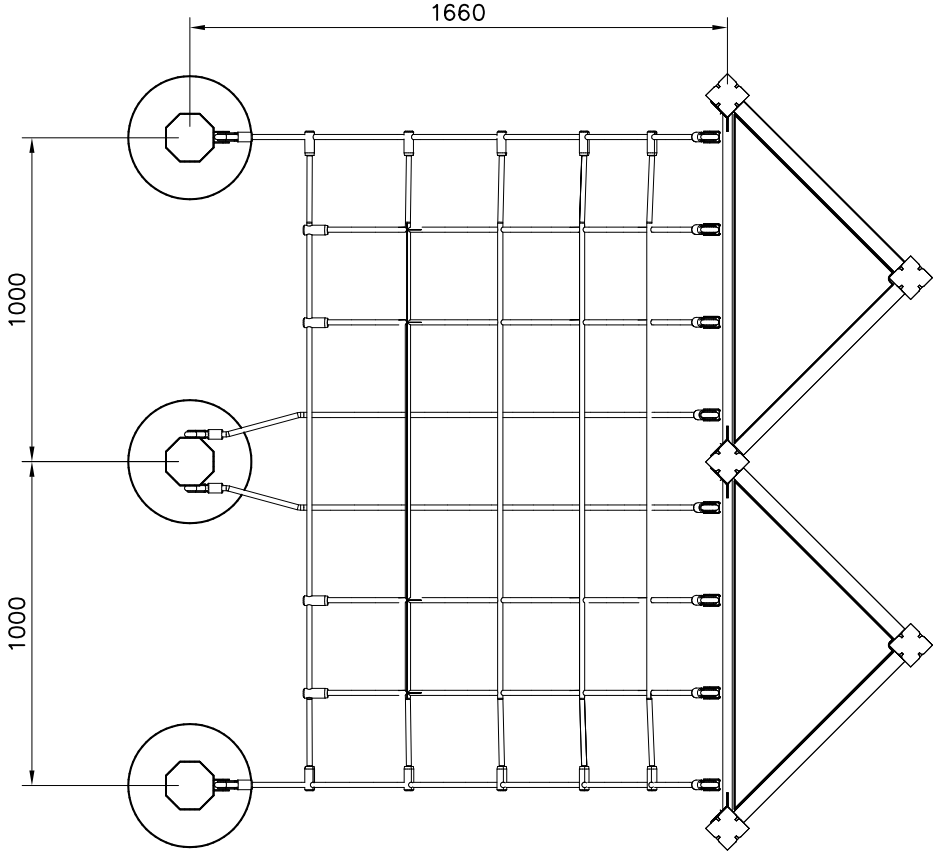

Copyright 1998 Lappset Group Ltd

LAPPSET®

707625

FINNO

DATE: 22.10.2020

OPTION 1. No wall on the sides

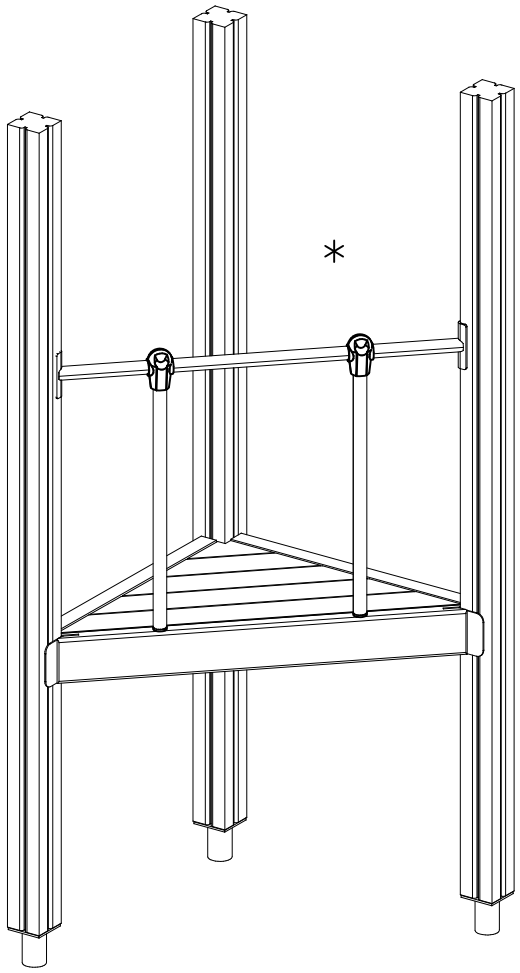

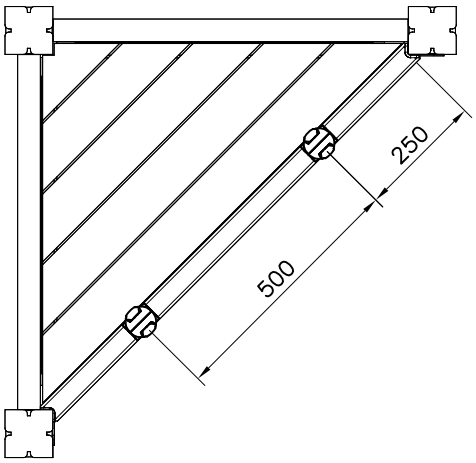

	PCS		PCS
① 980128	4	② 909256	4
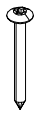			
93x93x2150		Ø16/8.4	
③ 908057	2	④ 903093	2
Ø32/29–L5/30		Ø8x90	
⑤ 900342	4	⑥ 901900	4
M8x16		20.5x36.2x56	
⑦ 909850	2	⑧ 980150	2
M8x25		M8	
⑨ 901182	2	⑩ 901902	4
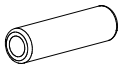			
Ø11/M8x40		30.7x60.9x100	
		○ 908044	2
		Ø33.7x679	
○ 911529	1	○ 907920	1
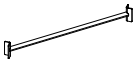	OR	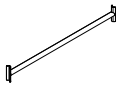	

Copyright Lappset Group Ltd

LAPPSET®

707625

FINNO

DATE: 22.10.2020

OPTION 2. Wall on either side (move vertical bar 70mm)

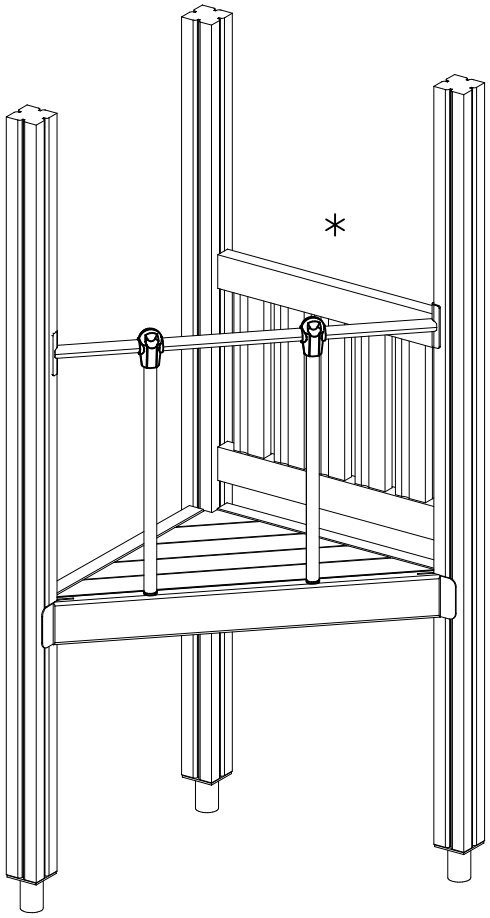

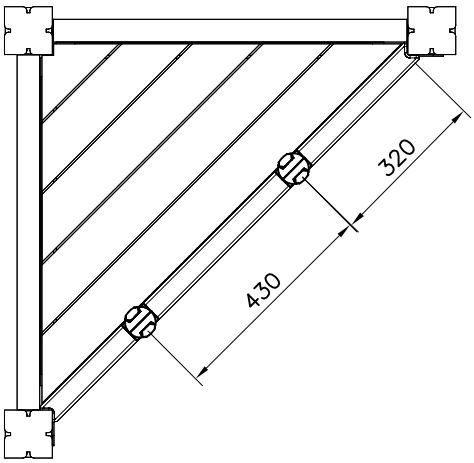

Copyright Lappset Group Ltd

LAPPSET®

707625

FINNO

DATE: 22.10.2020

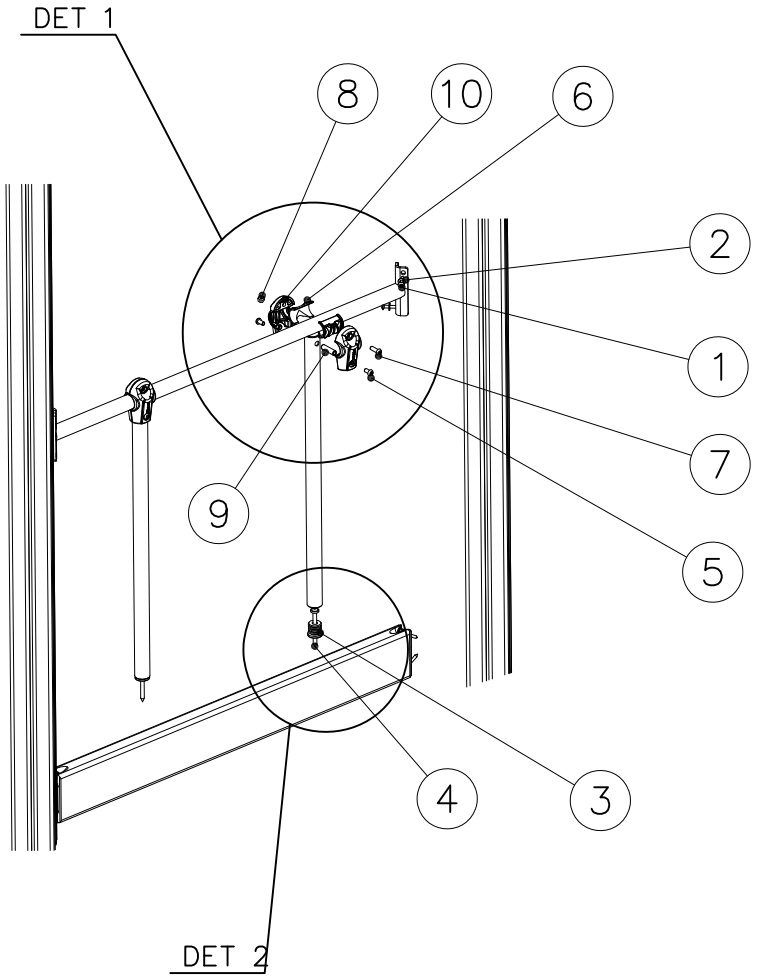

DET 1

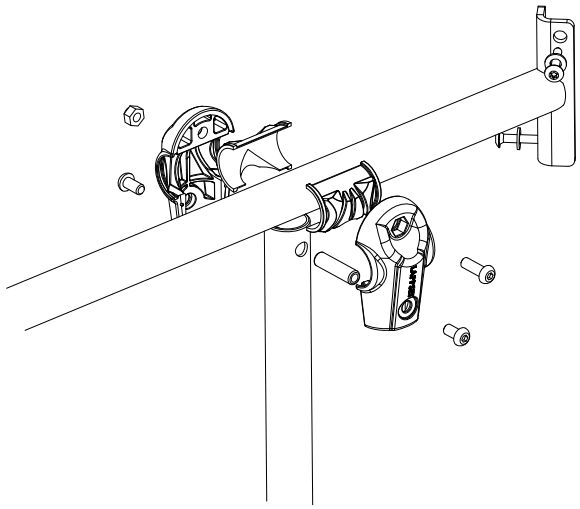

DET 2

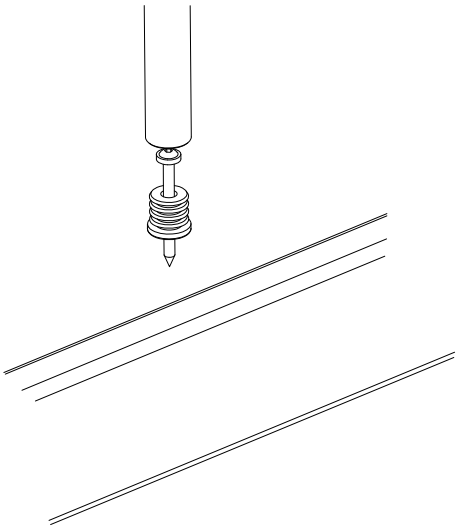

Copyright 1998 Lappset Group Ltd

LAPPSET®

707665

FINNO

DATE: 10.3.2016

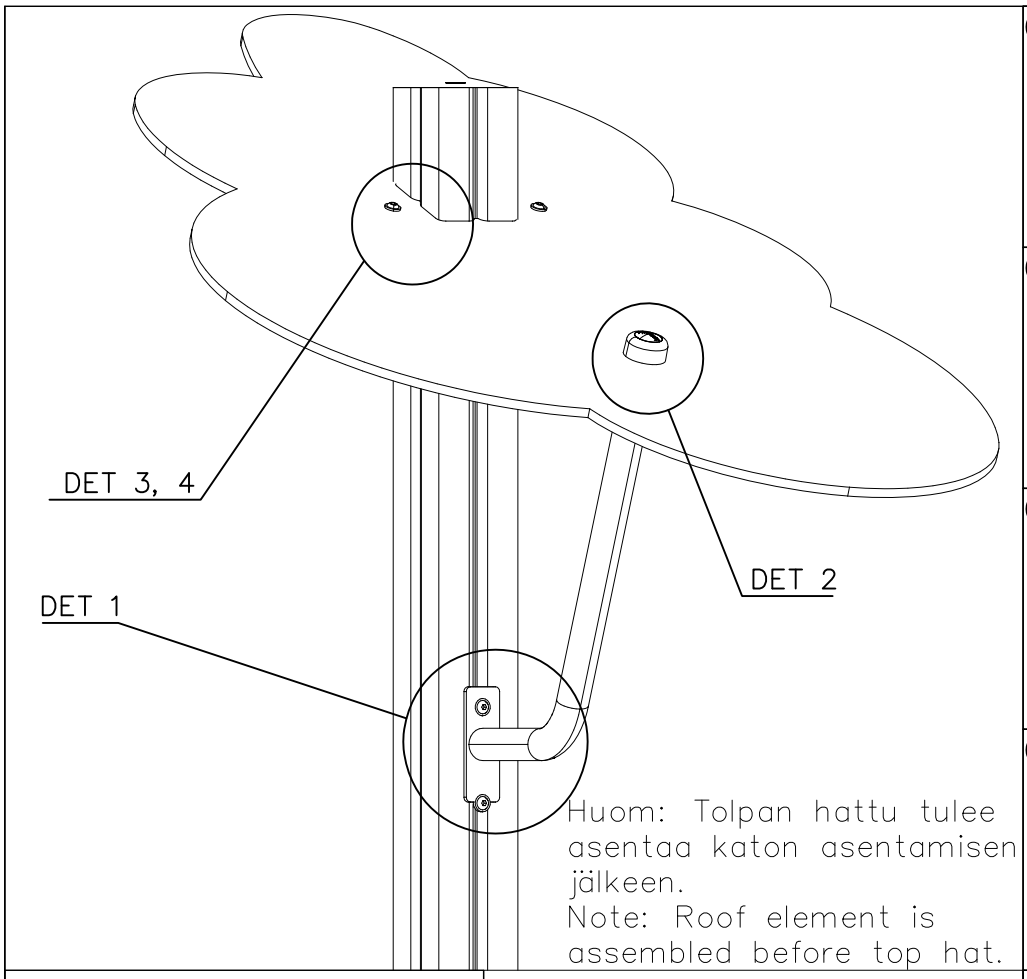

		PCS			PCS
1	900240	4	2	901570	2
	Ø8x70			36x55x55	
3	980154	1	4	905086	1
	Ø24/13			Ø44/13,5	
5	905090	1	6	905115	1
	Ø45			Ø30	
7	909142	1	8	980160	2
	M12x70			M8	
9	909852	2			
	M8x30				

DET 1

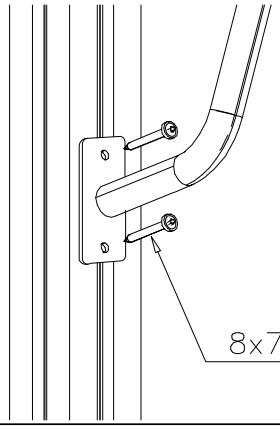

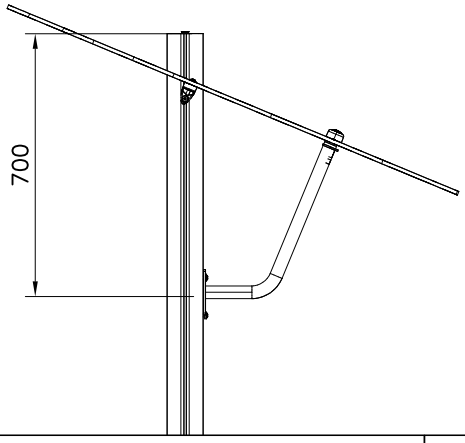

DET 2

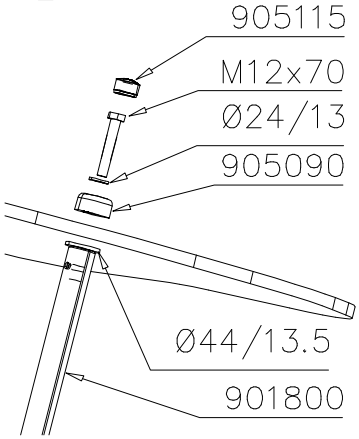

DET 3

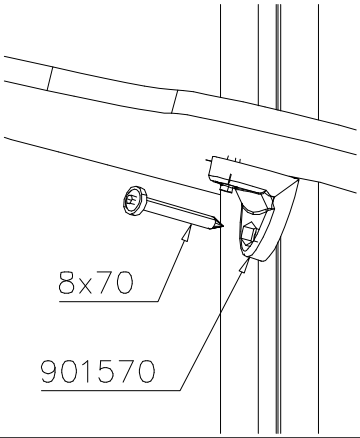

DET 4

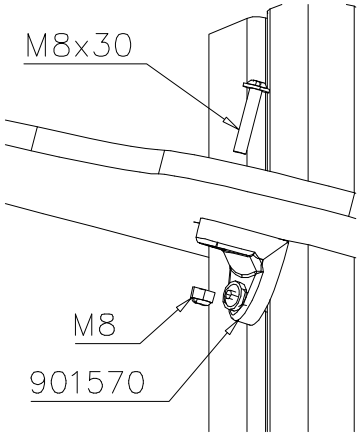

Copyright Lappset Group Ltd

LAPPSET®

707693

FINNO

DATE: 24.3.2016

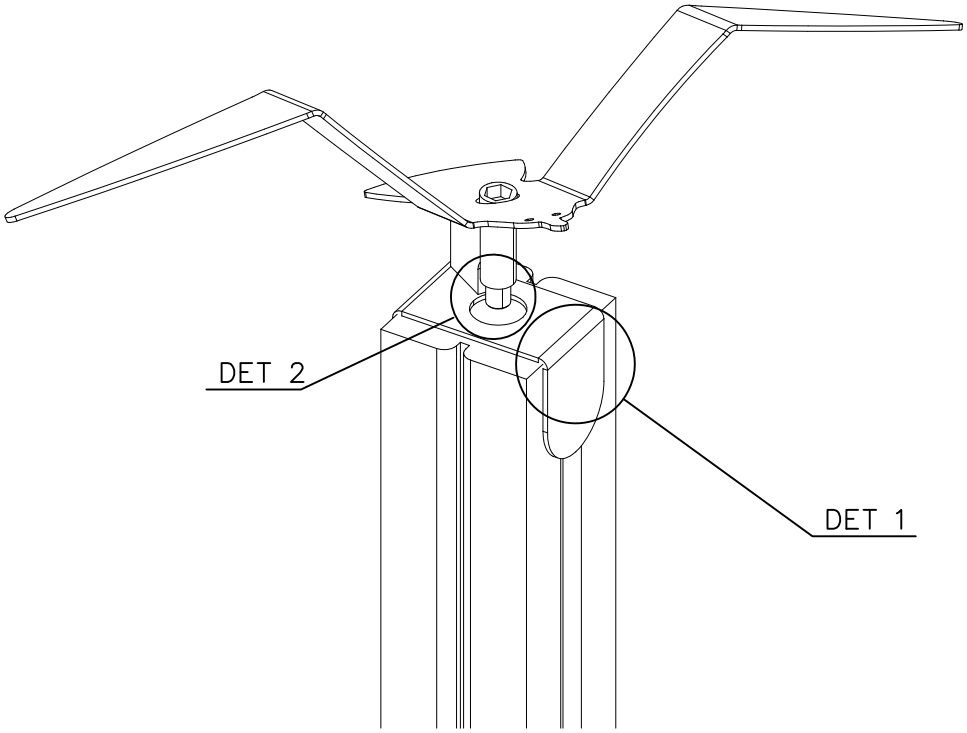

	PCS		PCS
1 900240 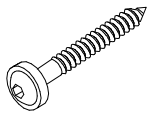 Ø8x70	2	2 980106 Ø5x40	2
3 907082 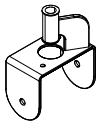 Ø8x70	1		
◯ 908357	1	◯ 900793 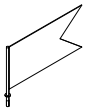	1
◯ 903157 M14	1		

DET 1

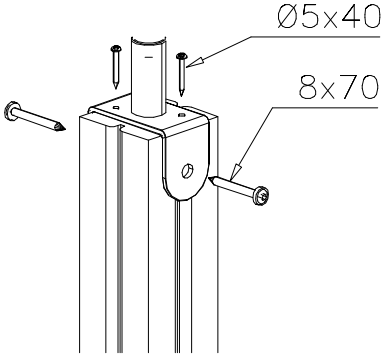

DET 2

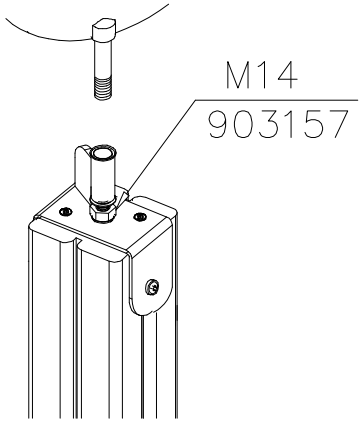

Copyright Lappset Group Ltd

LAPPSET®

GRIP

FINNO

DATE: 18.1.2016

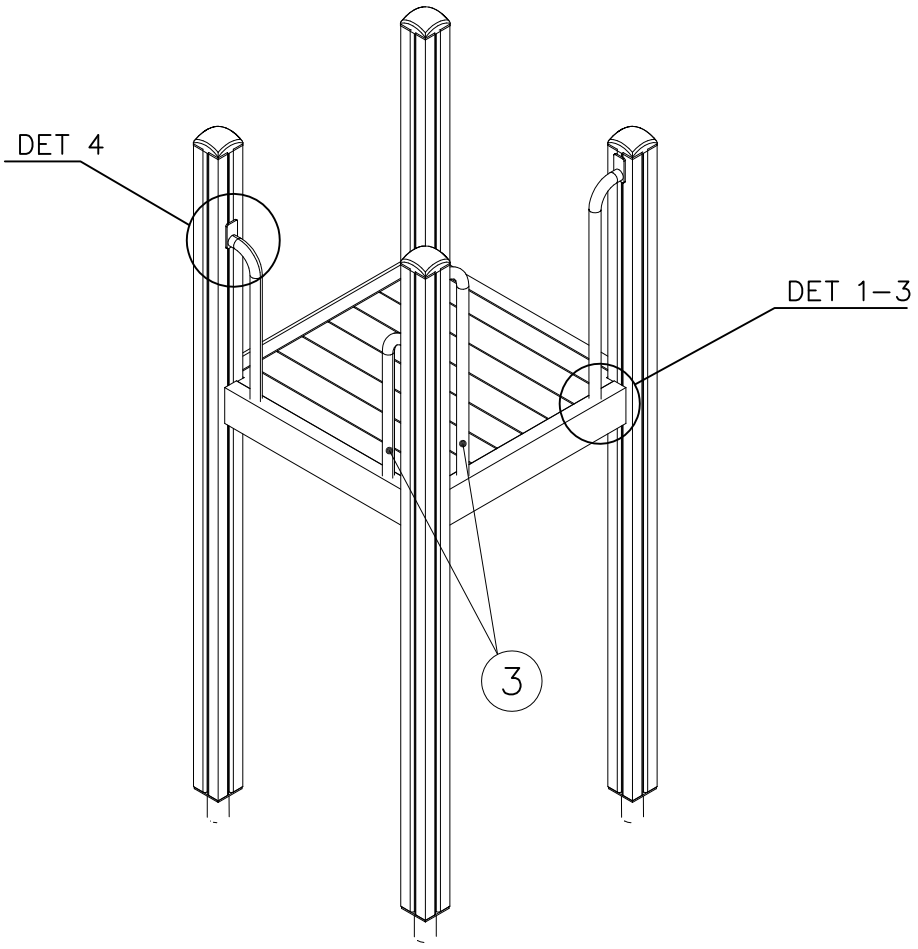

1 900240 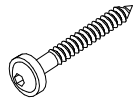 Ø8x70	PCS 1	2 900727 M10x80	PCS 1
	PCS		PCS
3 907688 765	PCS 1	3 907701 545	PCS 1
	PCS		PCS
	PCS		PCS
	PCS		PCS
	PCS		PCS
	PCS		PCS

DET 1

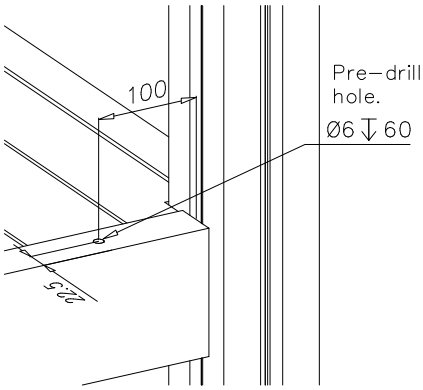

DET 2

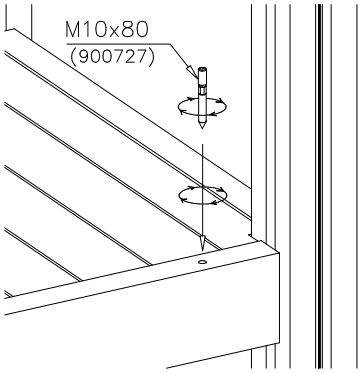

DET 3

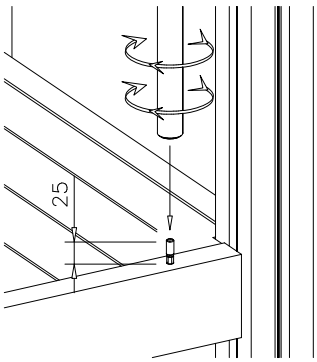

DET 4

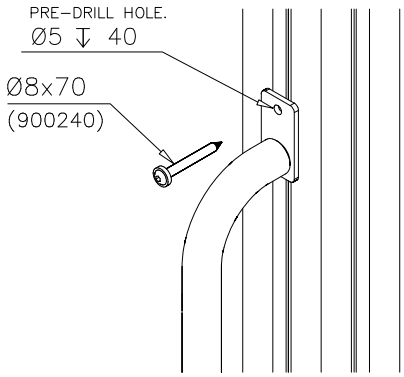

Copyright Lappset Group Ltd

LAPPSET®

705423

CLOXX

DATE: 2.11.2023

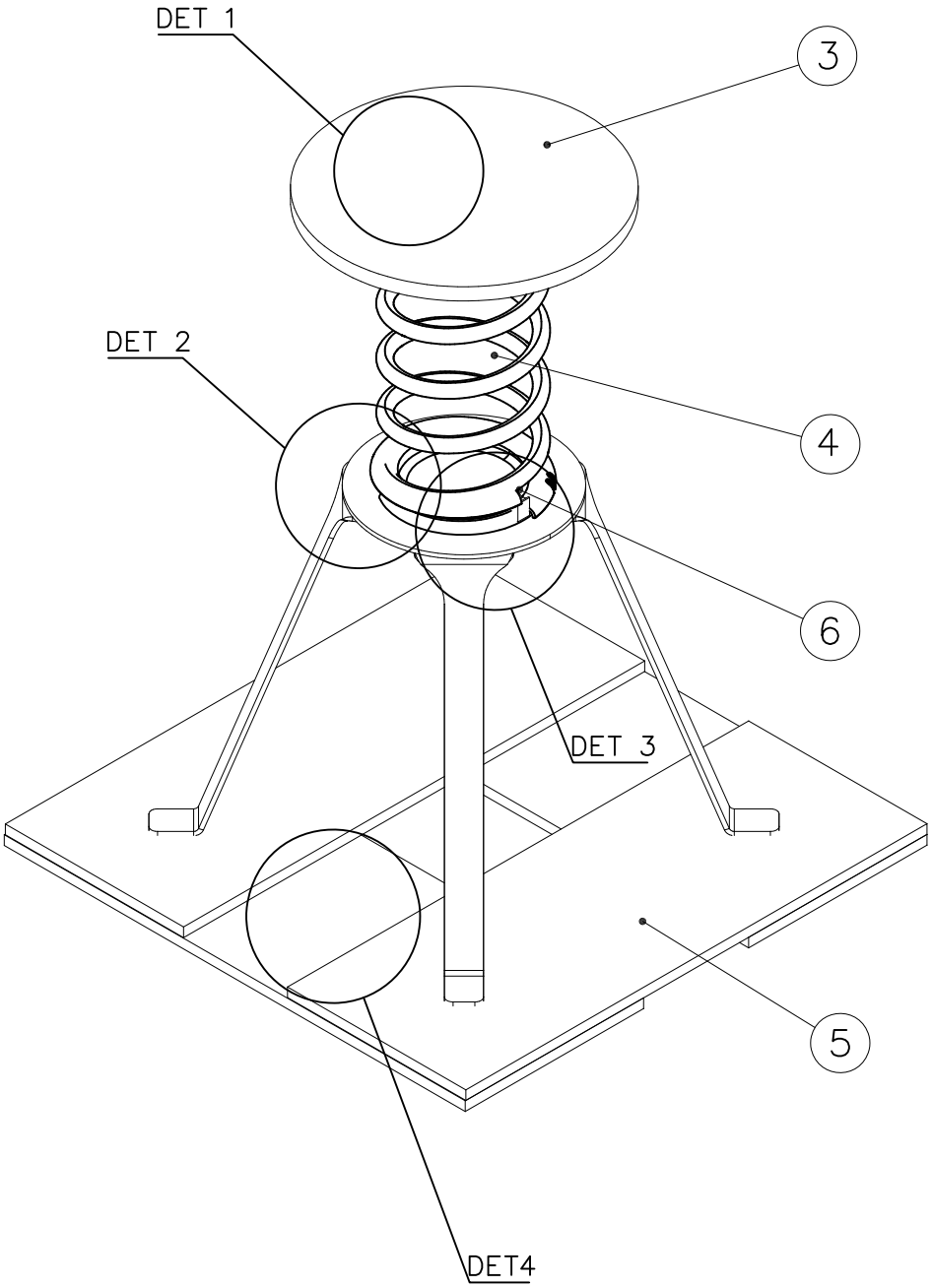

1 702286	PCS 1	2 901487	PCS 3
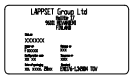 90x50		M10x40	
3 705432	PCS 1	4 903192	PCS 1
Ø400		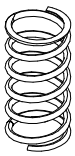 20x200	
5 705101	PCS 1		PCS
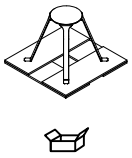			
		6 903191	PCS 2
		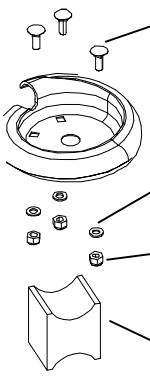 M10x35 (902252) Ø20/10.5x2 (901302) M10 (909637) 19x21x25 (903193)	PCS
	PCS		PCS
	PCS		PCS
	PCS		PCS

Copyright Lappset Group Ltd

LAPPSET®

705423

CLOXX

DATE: 2.11.2023

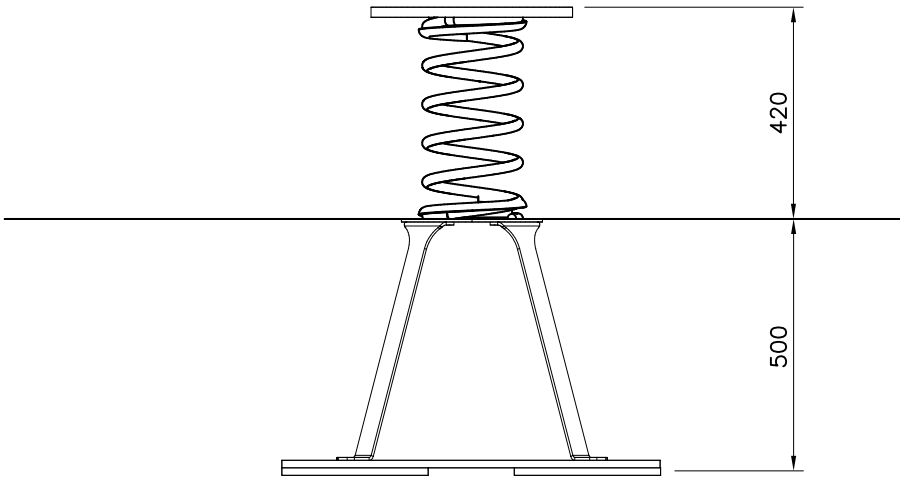

——— EN Impact Area 5.7 m2

– – – – Falling Space 5.7 m2

Max Falling Height 420 mm

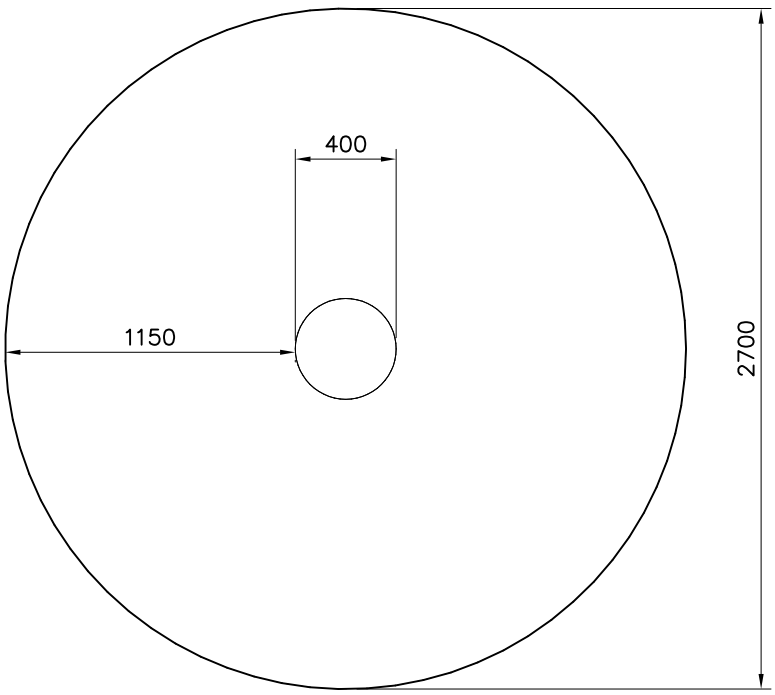

Copyright 1998 Lappset Group Ltd

DET 1

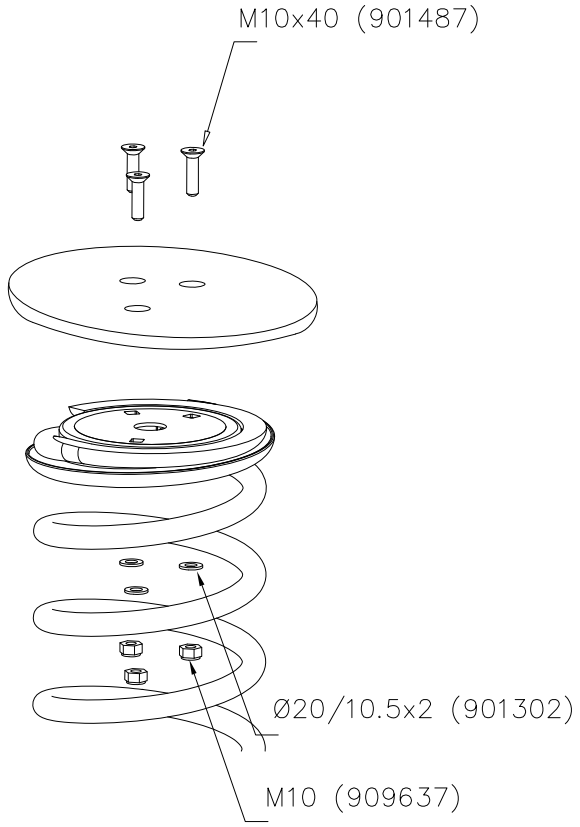

DET 2

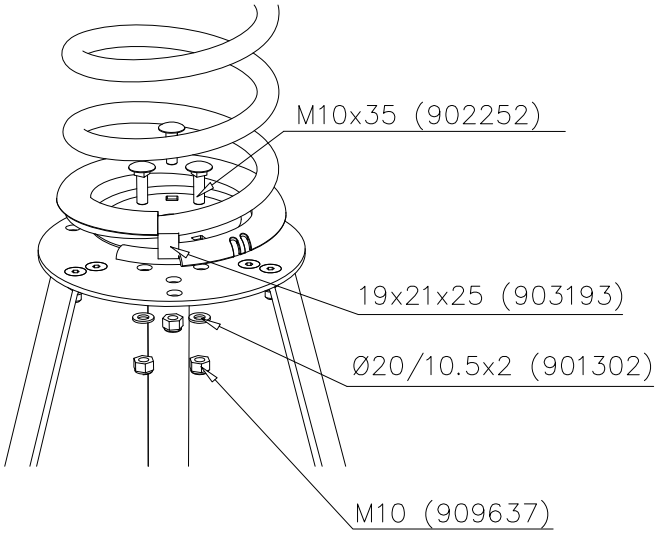

DET 3

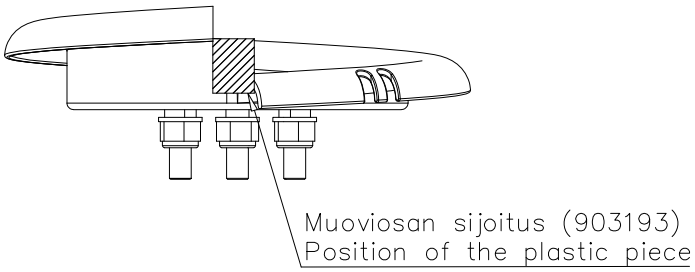

DET 4 705101 OPTIO 1

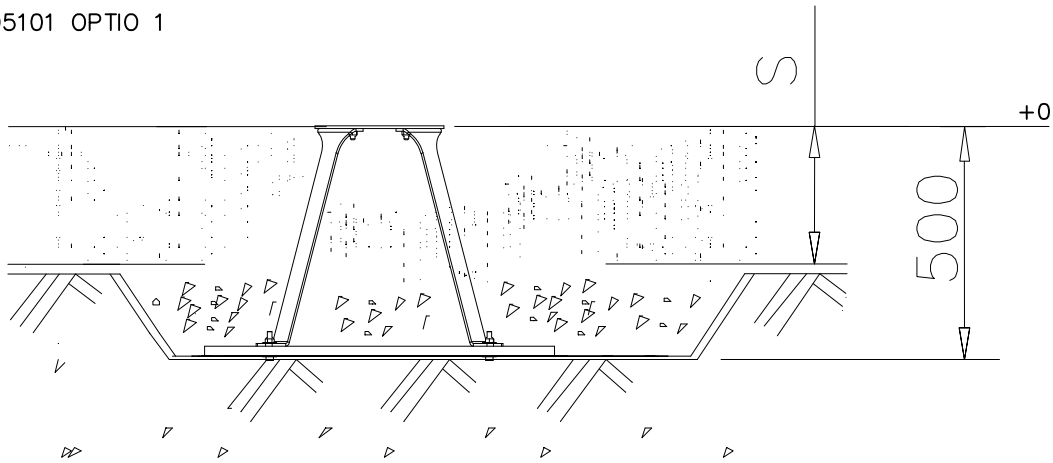

Copyright Lappset Group Ltd