LAPPSET®

DASH PARKOUR

ASENNUSOHJE
MONTERINGSANSVISNING
INSTALLATION INSTRUCTION
AUFBAUANLEITUNG
NOTICE D'INSTALLATION

DATE: 20.1.2020

081787M

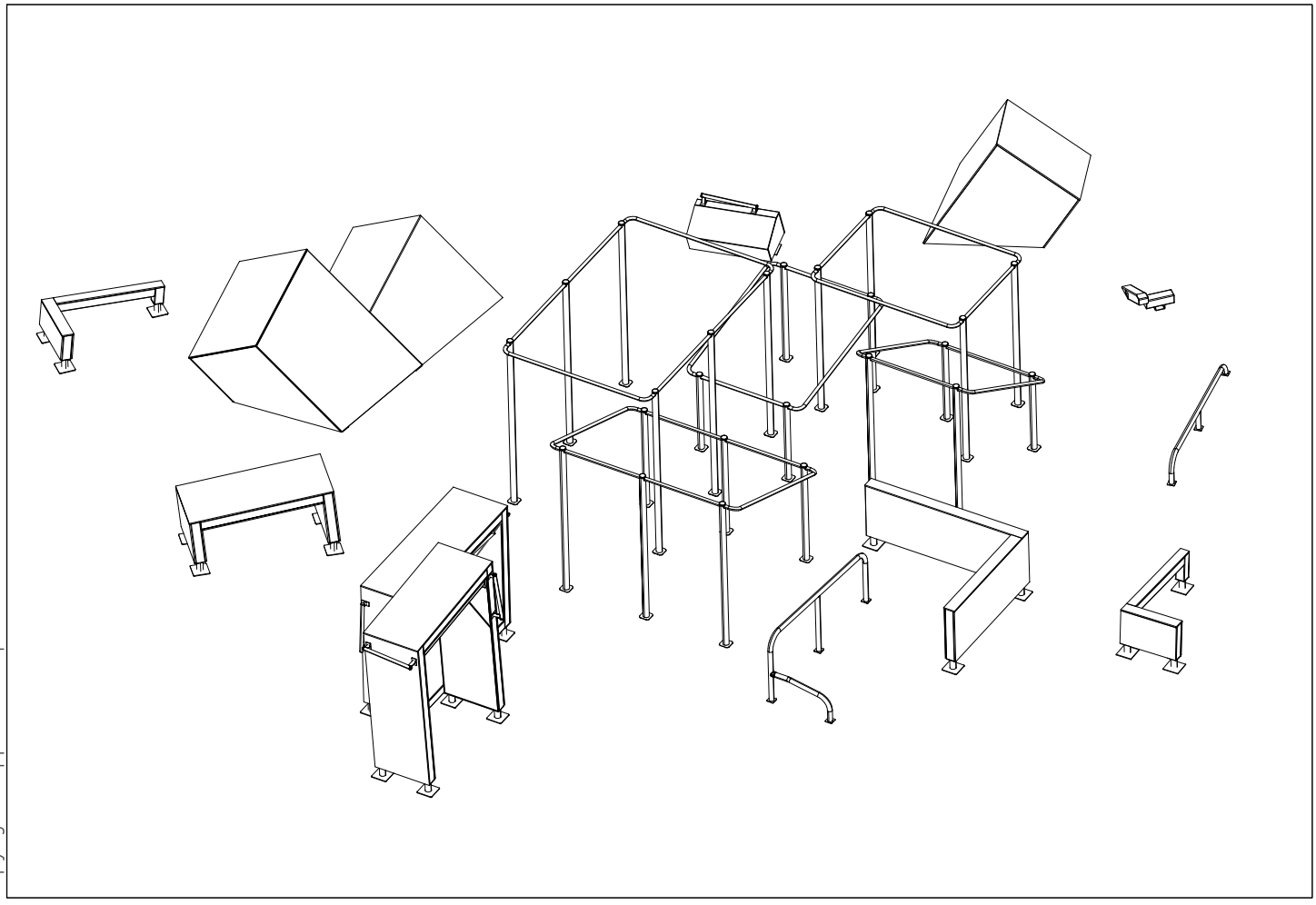

Copyright Lappset Group Ltd

LAPPSET®

DASH PARKOUR

081787M

1(1)
3

DATE: 20.1.2020

081701M	PCS	081702M	PCS	081710M	PCS	081712M	PCS	081720M	PCS	081721M	PCS
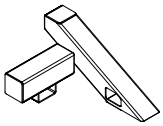	1	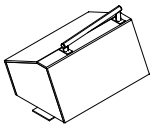	1	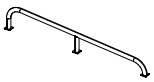	1	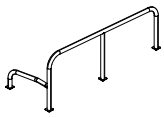	1	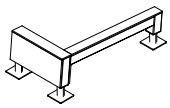	1	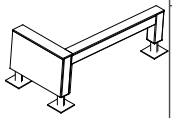	1
081722M	PCS	081730M	PCS	081738M	PCS	081740M	PCS	081743M	PCS	081752M	PCS
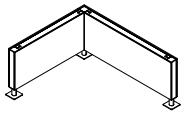	1	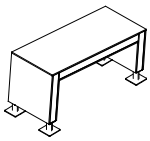	1	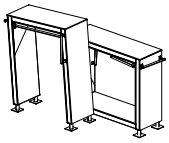	1	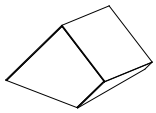	1	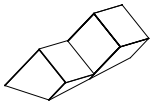	1	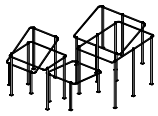	1
	PCS		PCS		PCS		PCS		PCS		PCS
	PCS		PCS		PCS		PCS		PCS		PCS
	PCS		PCS		PCS		PCS		PCS		PCS
	PCS		PCS		PCS		PCS		PCS		PCS
	PCS		PCS		PCS		PCS		PCS		PCS

Copyright Lappset Group Ltd

LAPPSET®

DASH PARKOUR

081787M

DATE: 20.1.2020

4a

1:100

0 5

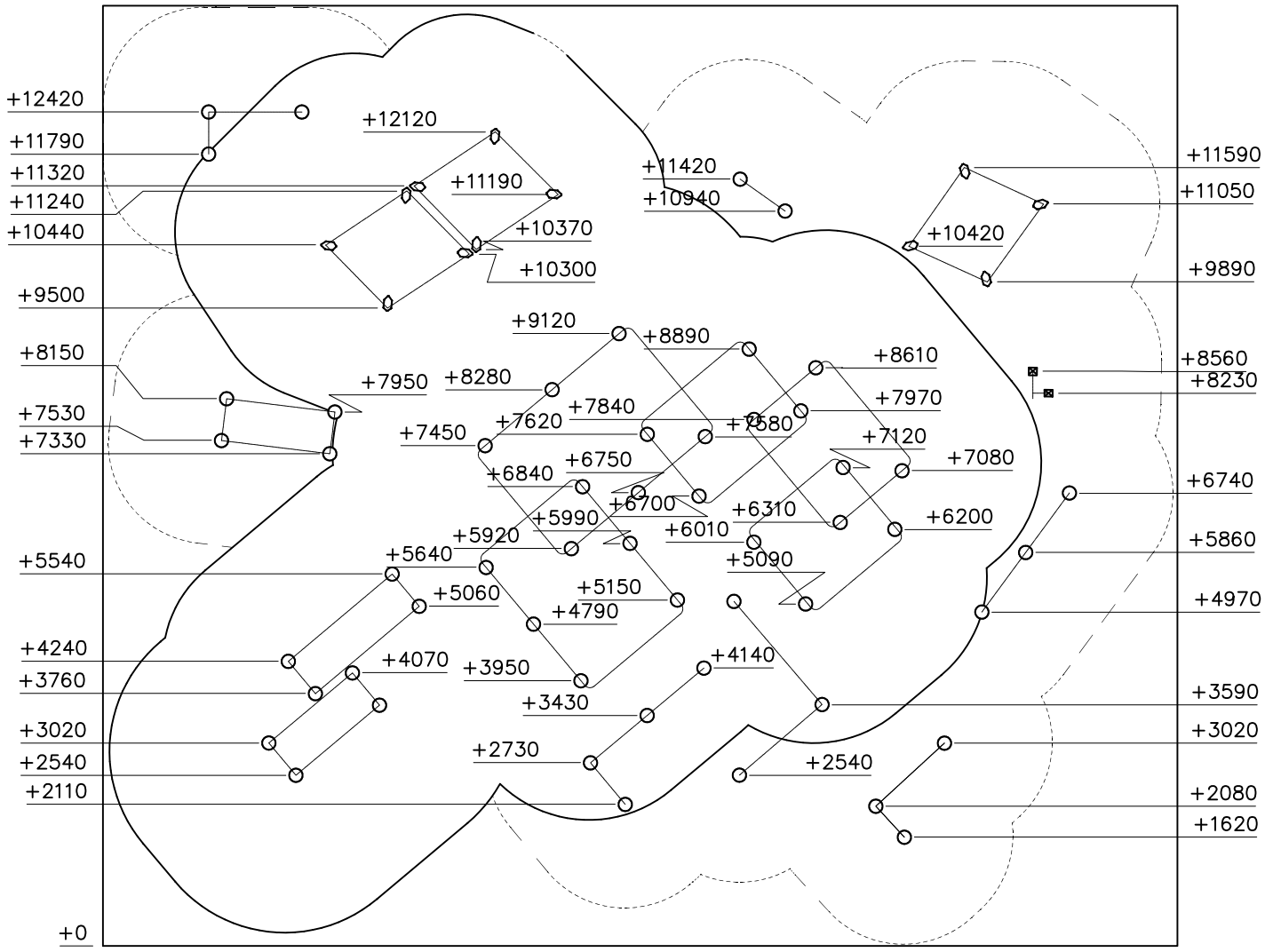

Copyright Lappset Group Ltd

LAPPSET®
DASH PARKOUR

081787M

DATE: 20.1.2020

4b

1:100
0 5

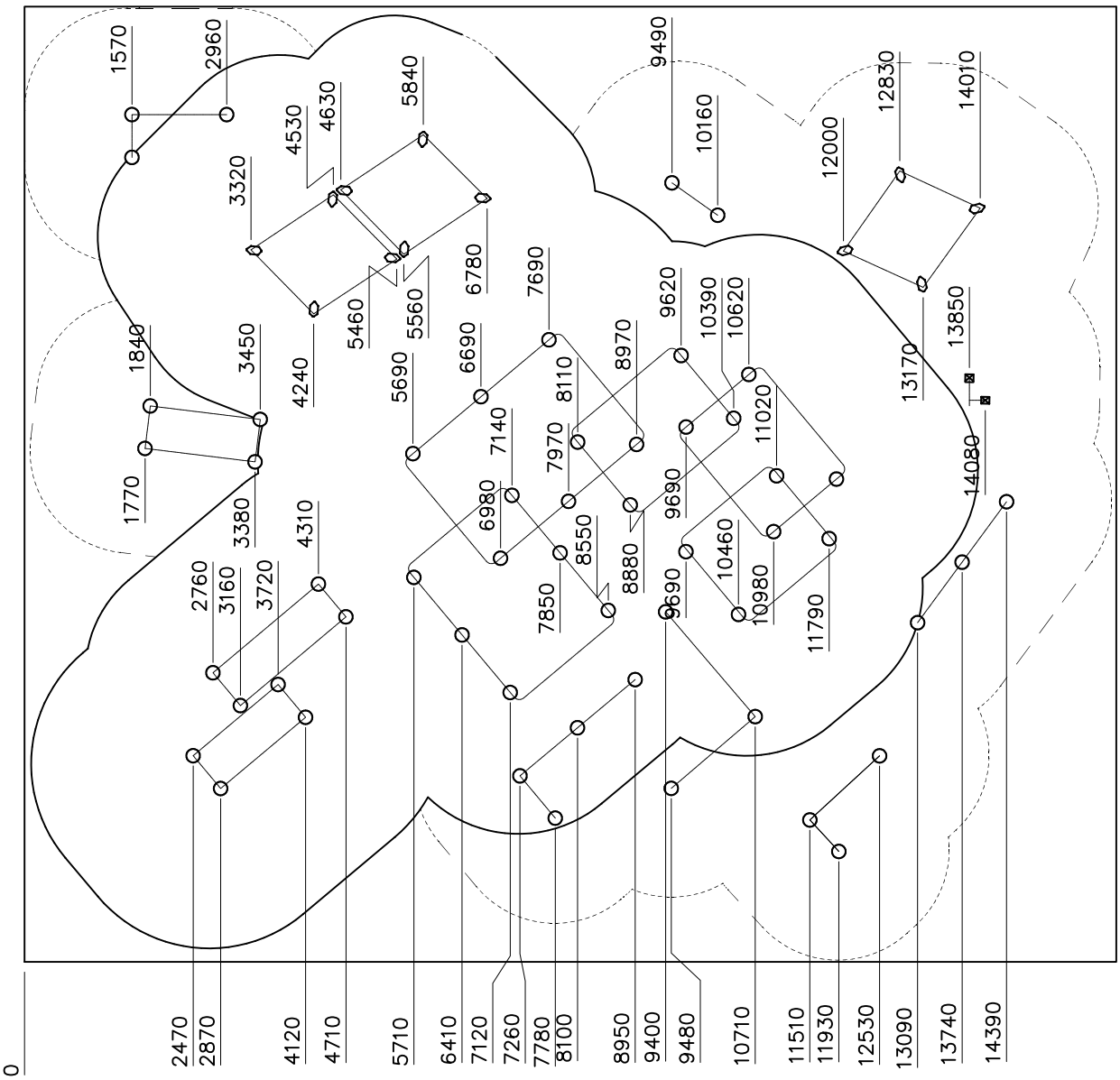

Copyright Lappset Group Ltd

LAPPSET®

DASH PARKOUR

081787M

DATE: 15.5.2020

5

EN Impact Attenuating Surface (IAS) 118.2 m2
Falling Space 182.7 m2
Max Falling Height 2450 mm

1:125

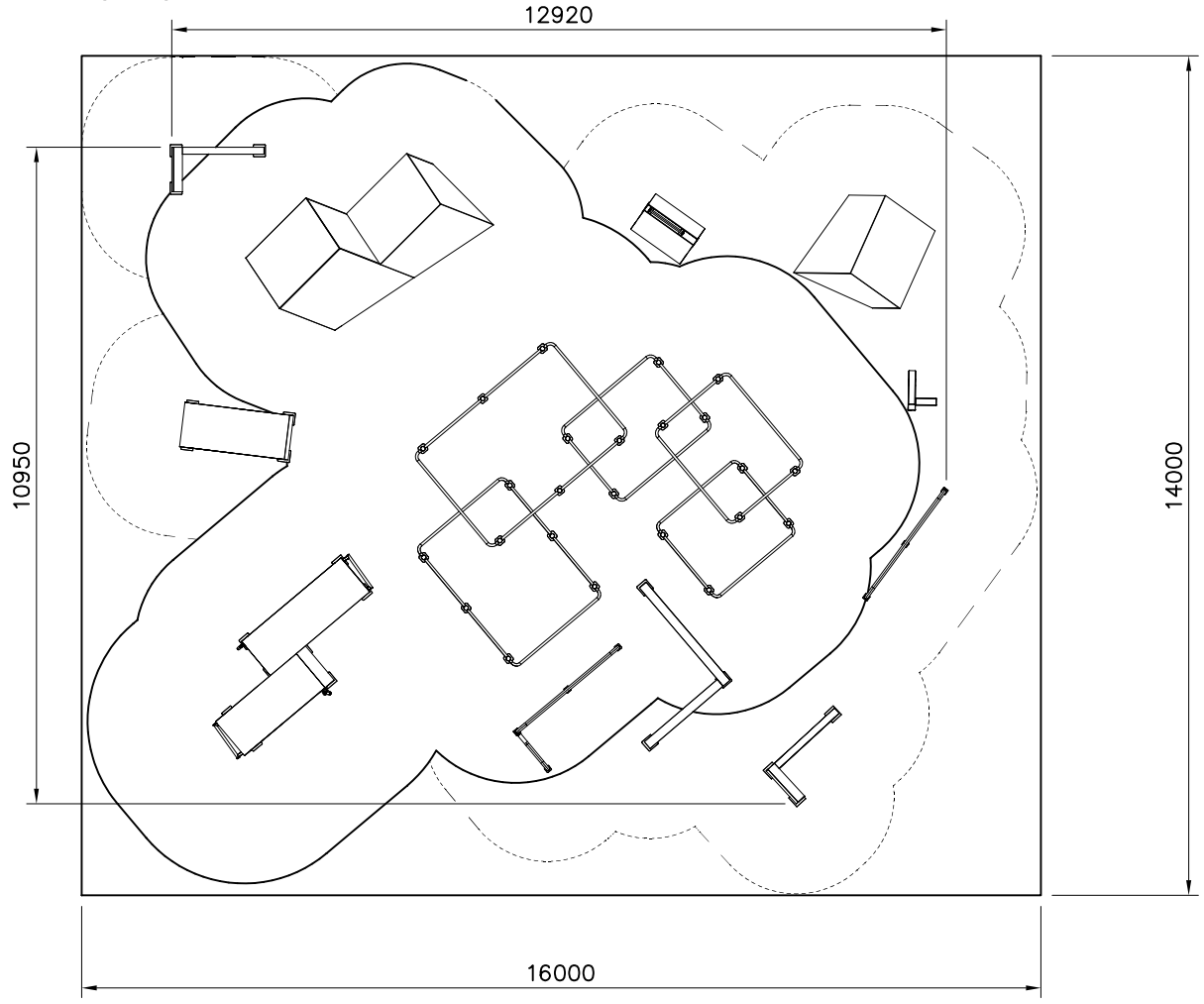

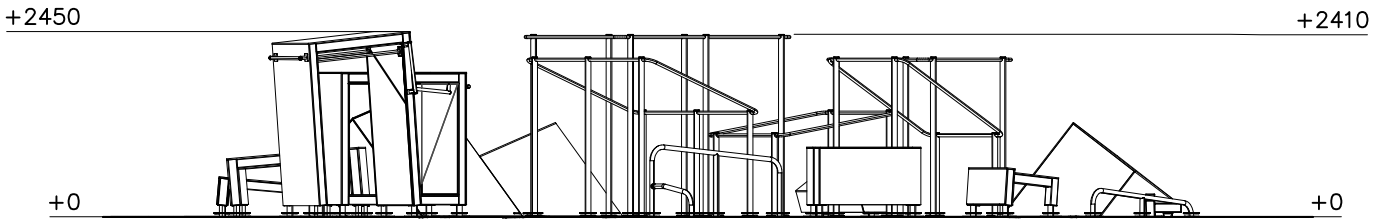

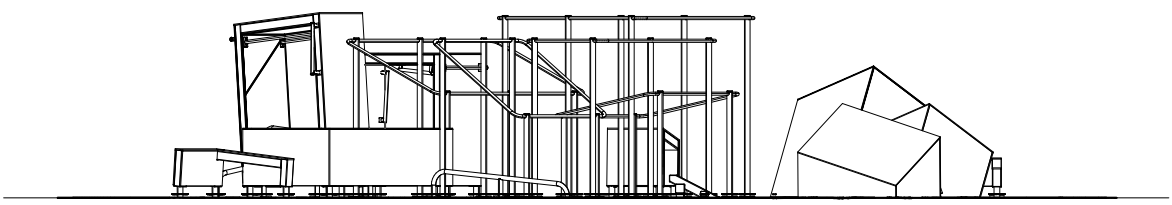

Copyright Lappset Group Ltd

LAPPSET®
DASH PARKOUR

081787M

DATE: 20.1.2020

5b

1:100

Groudmarks

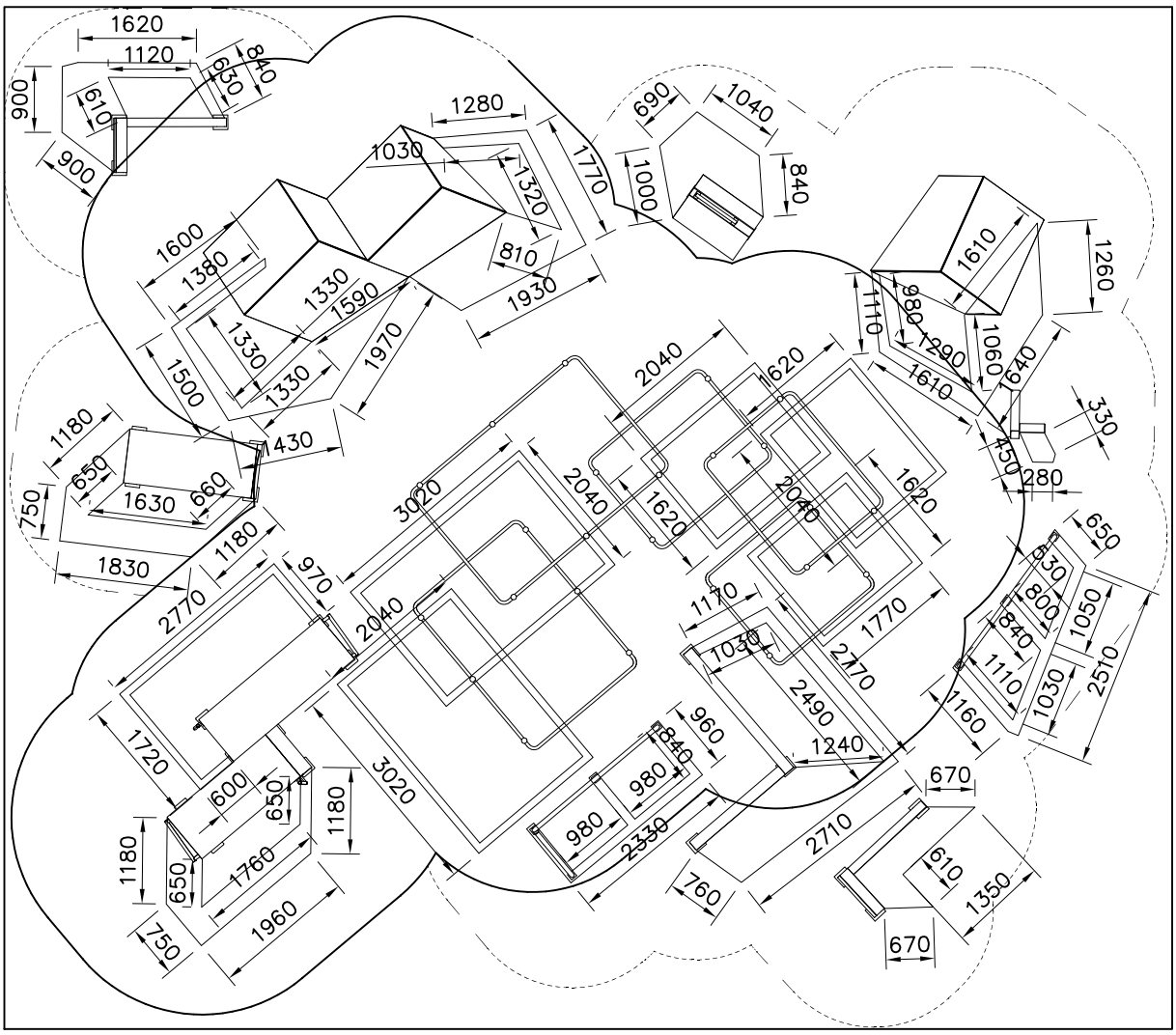

Copyright Lappset Group Ltd

LAPPSET®

081787M

DASH PARKOUR

DATE: 20.1.2020

6

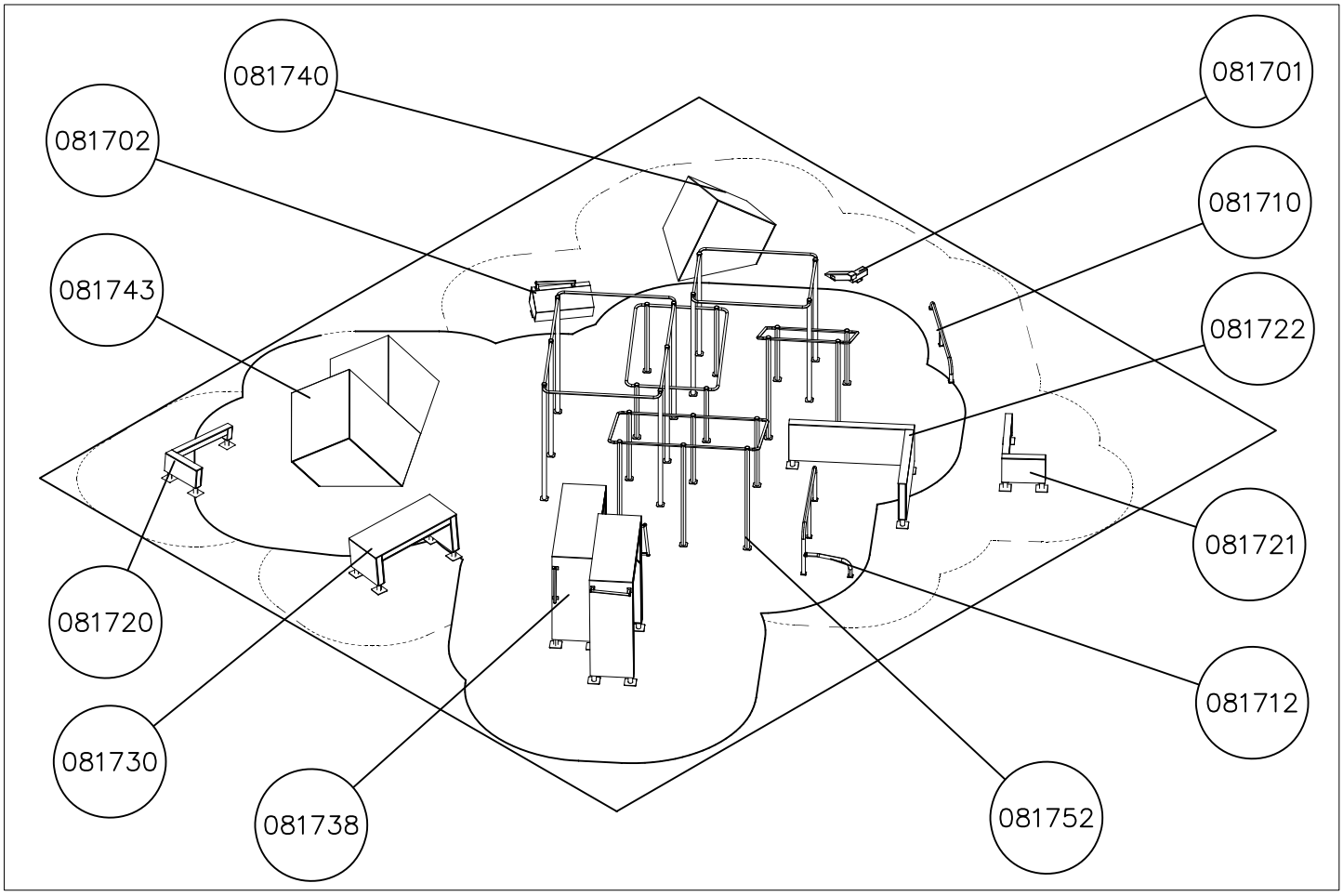

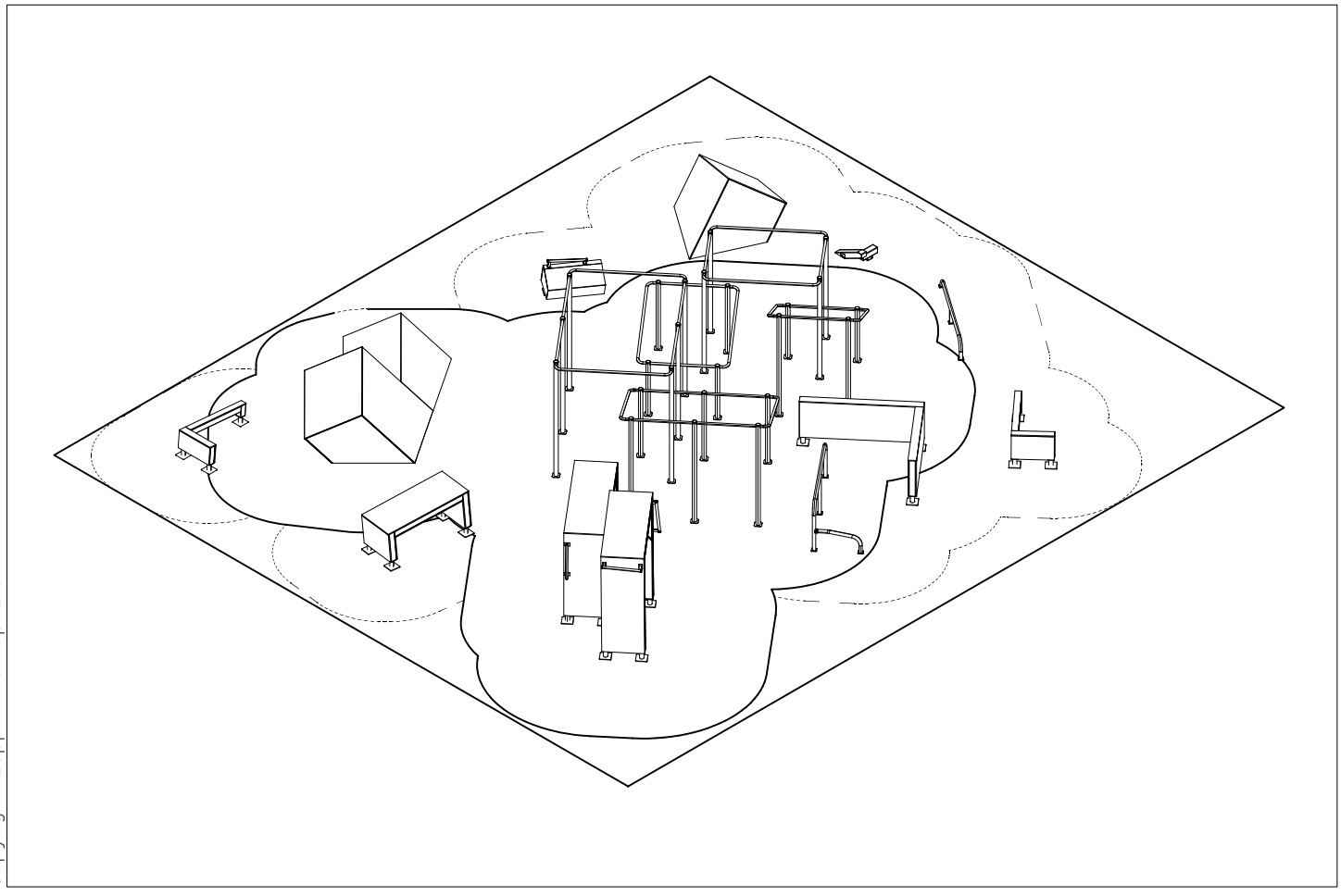

Copyright Lappset Group Ltd

LAPPSET®

081787M

DASH PARKOUR

DATE: 20.1.2020

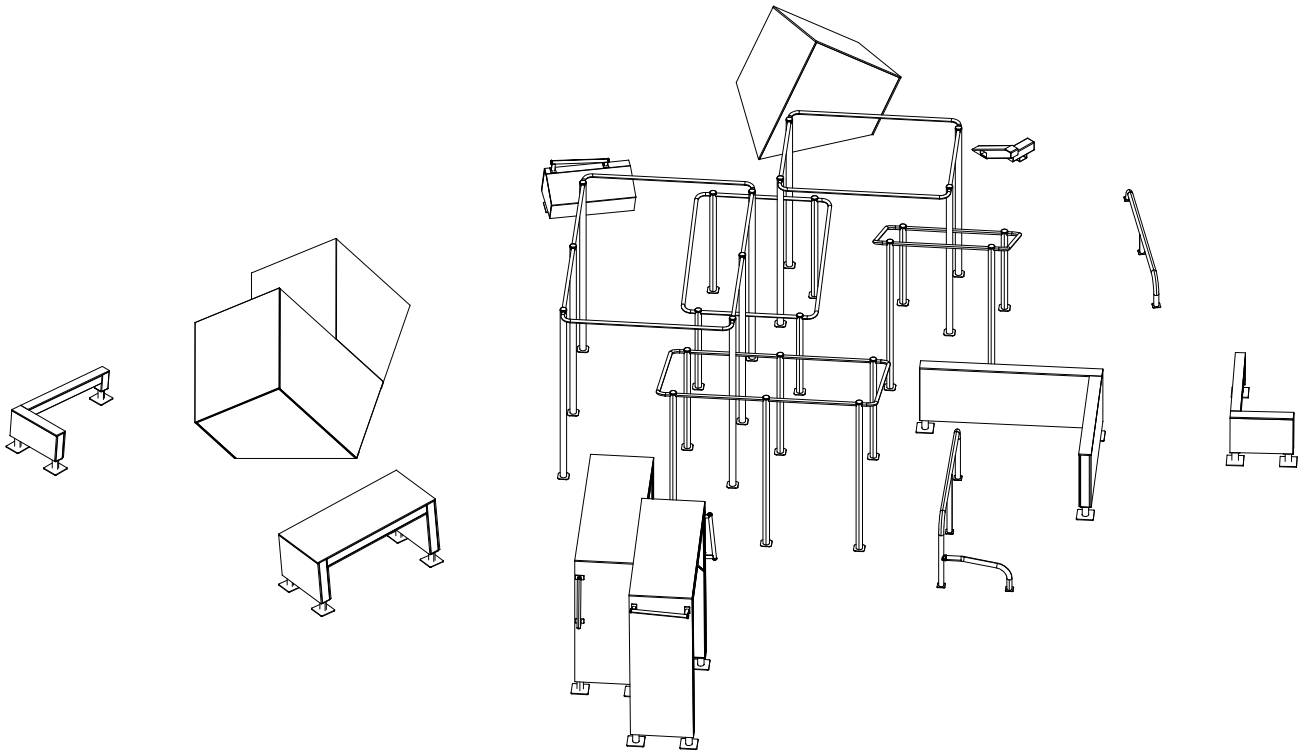

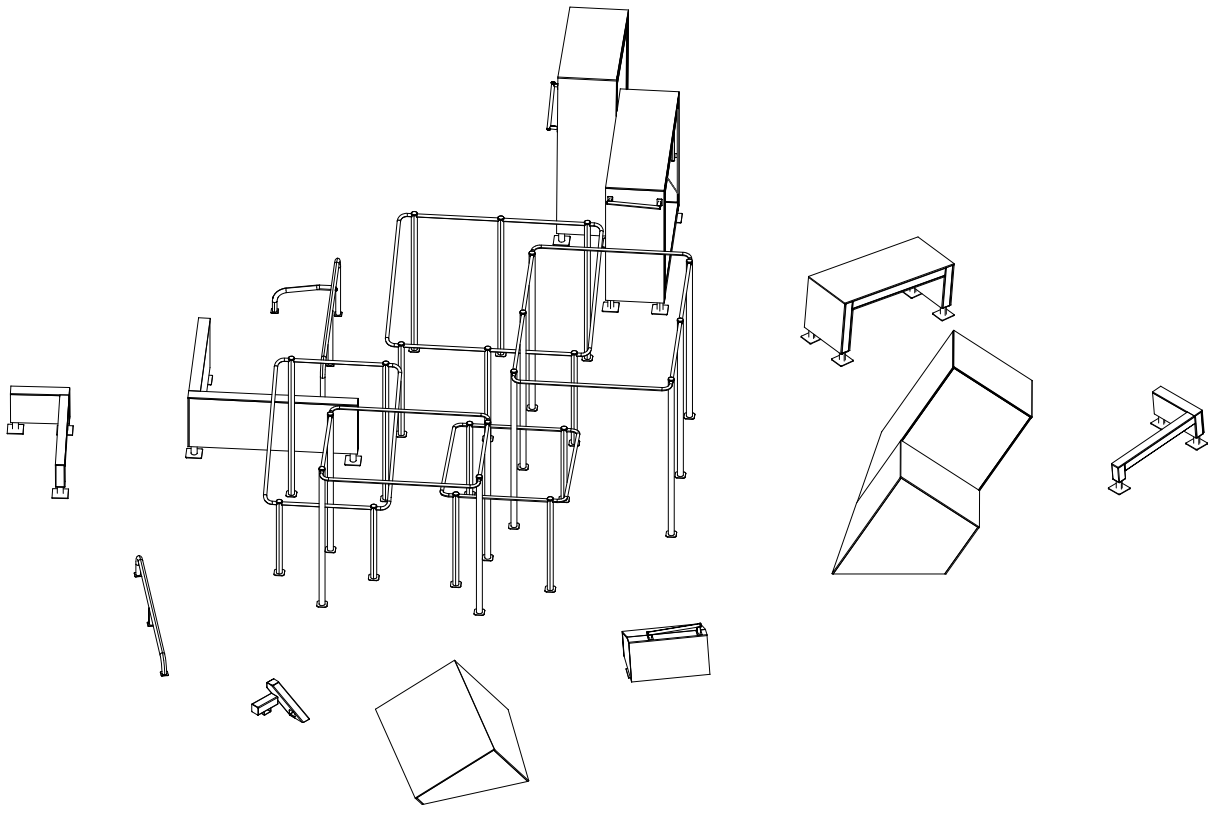

Copyright Lappset Group Ltd

LAPPSET®

081740M

DATE: 17.12.2019

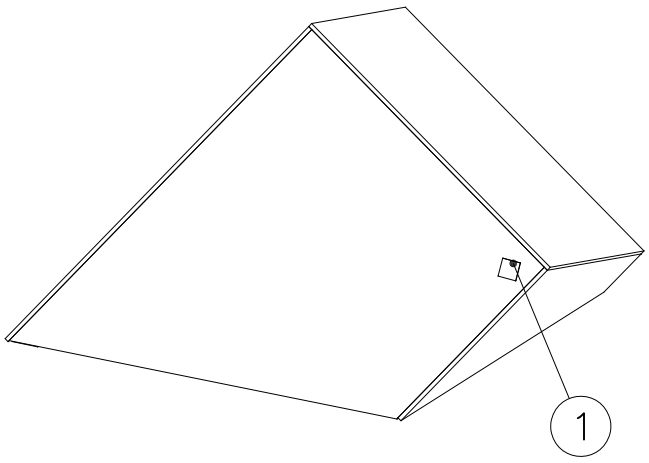

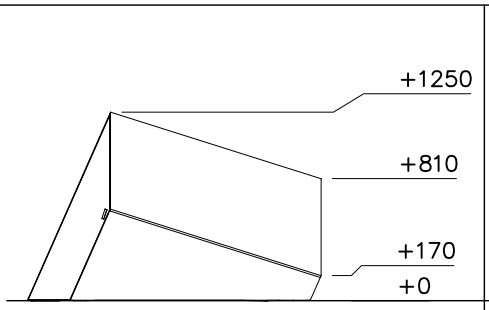

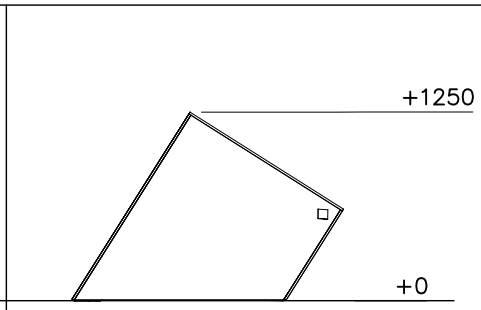

① 702341	PCS	1		② 709159	PCS	1		③ 709164	PCS	2		④ 709165	PCS	2		⑤ 709168	PCS	1	
				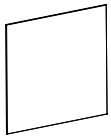												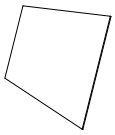			
90x50				15x1200x1486				18x80x1135				18x80x1420				15x1486x1545			
⑥ 709169	PCS	1		⑦ 709170	PCS	1		⑧ 709171	PCS	1		⑨ 902233	PCS	24		⑩ 905112	PCS	24	
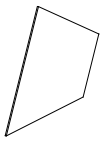				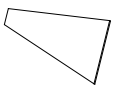				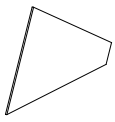											
15x1170x1540				15x1170x1620				15x990x1170				M10x30				Ø22			
⑪ 909637	PCS	24		⑫ 909638	PCS	48		⑬ 909876	PCS	48		⑭ 910744	PCS	1					
												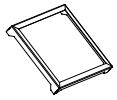							
M10				Ø20/10.5				M8x40				154x1160x1445							
⑮ 910768	PCS	2		⑯ 910769	PCS	2		⑰ 910789	PCS	1		⑱ 910790	PCS	1		⑲ 910791	PCS	1	
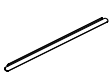				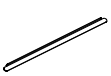												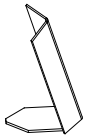			
30x60x1349				30x60x1504				L 1528				L 796				L 1016			
⑳ 910792	PCS	1																	
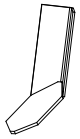																			
L 254																			

Copyright Lappset Group Ltd

LAPPSET®

081740M

DATE: 17.12.2019

		PCS
21	980108 Ø4x25	4
22	980128 Ø7x40	12
23	980150 M8	48
24	980151 Ø16/8.4	48

FOOT OPTION

709387+

		PCS
○	709386 SURFACE M16x170	1
○	910567 CONCRETE 117x117x715	4

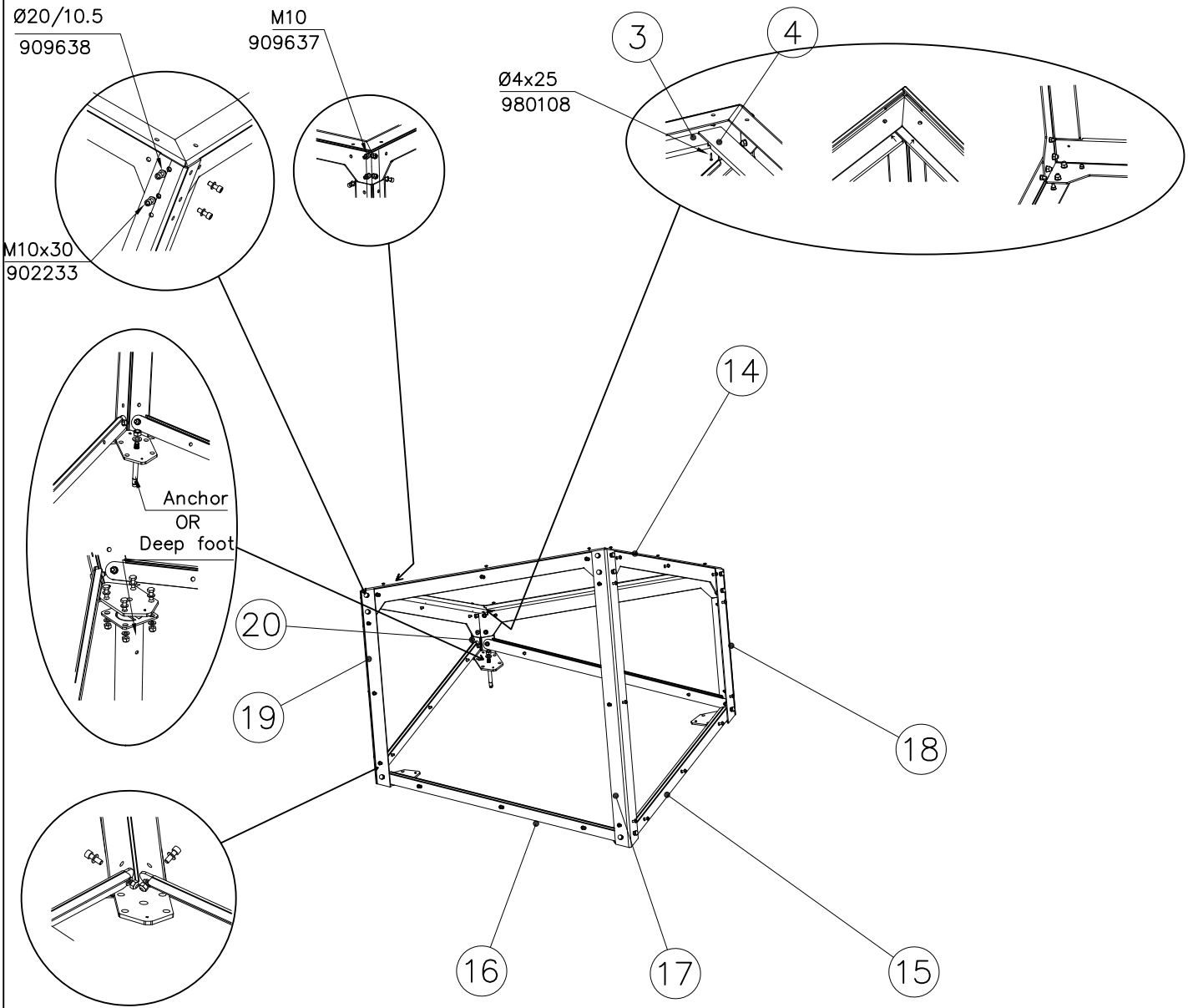

Copyright 1998 Lappset Group Ltd

LAPPSET®

081740M

DATE: 17.12.2019

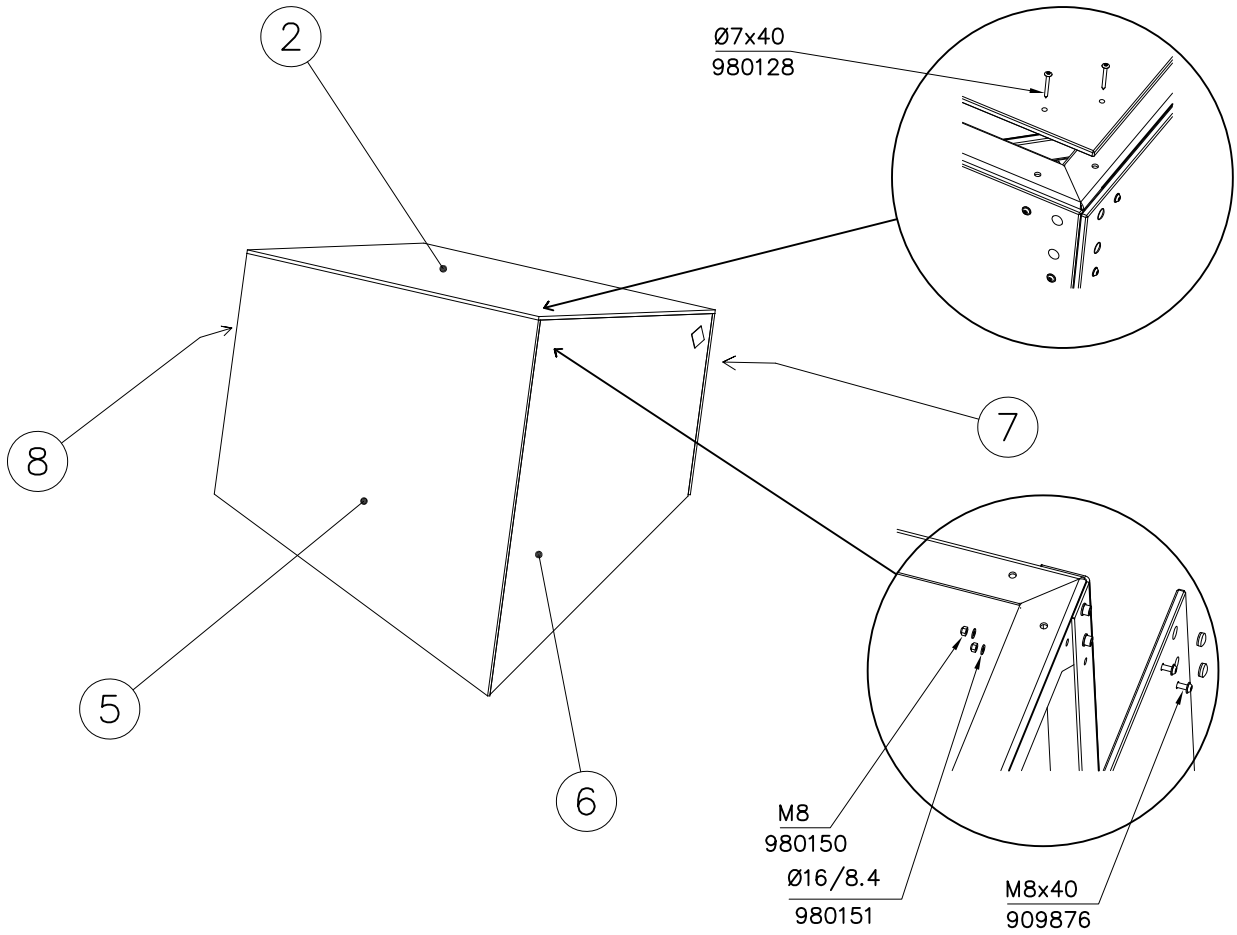

---- Falling Space 19.7 m2
Max Falling Height 1250 mm

1:75
0 3

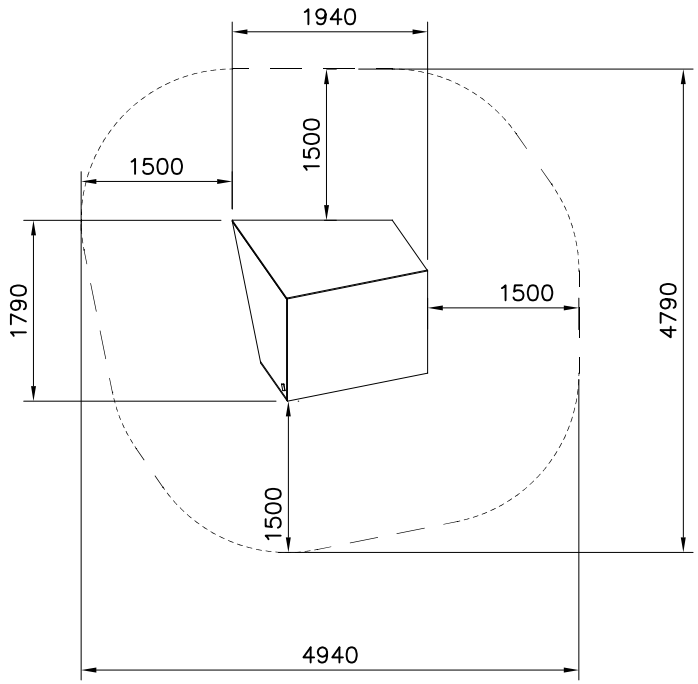

Copyright 1998 Lappset Group Ltd

LAPPSET® 081743M

DATE: 17.12.2019

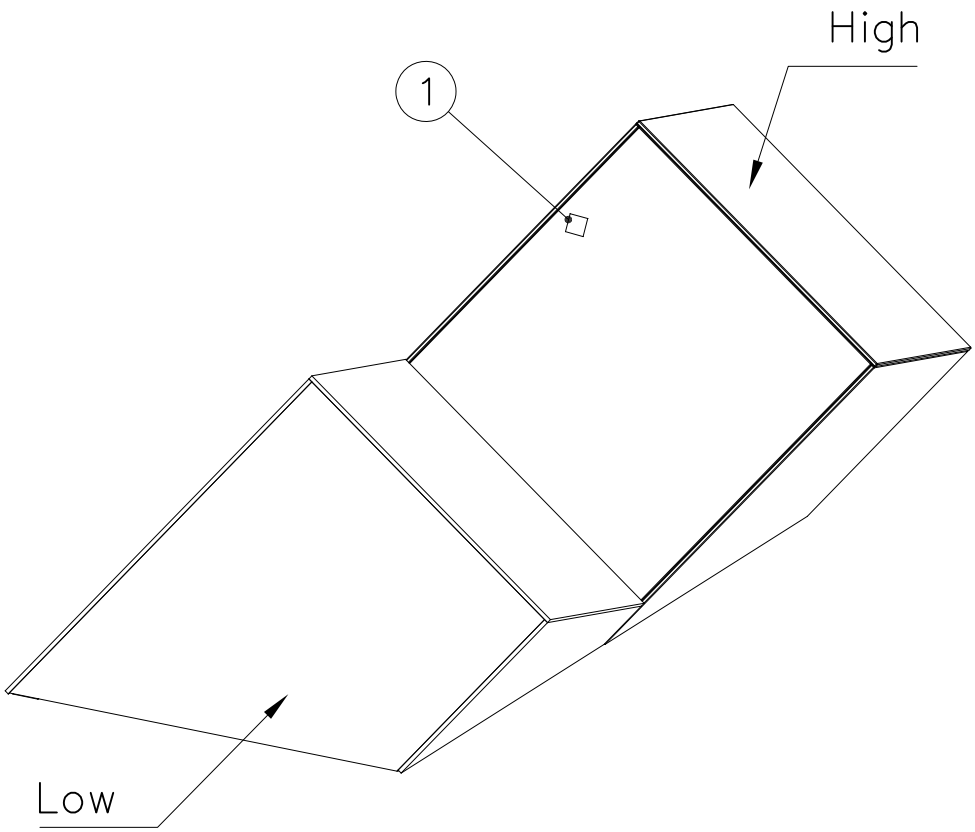

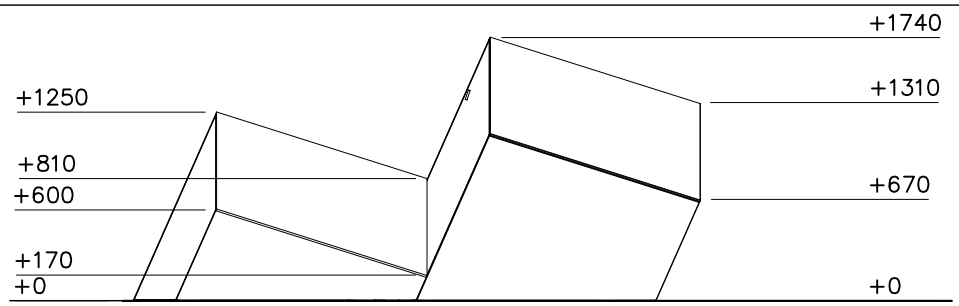

① 702341	PCS	1	② 709159	PCS	2	③ 709160	PCS	1	④ 709161	PCS	1	⑤ 709162	PCS	1	⑥ 709163	PCS	1	⑦ 709164	PCS	4
90x50			15x1200x1486			15x1486x2174			15x1170x2170			15x1376x1486			15x1170x1620			18x80x1135		
⑧ 709165	PCS	4	⑨ 709168	PCS	1	⑩ 709169	PCS	1	⑪ 709170	PCS	1	⑫ 709171	PCS	1	⑬ 902233	PCS	48	⑭ 905112	PCS	48
18x80x1420			15x1486x1545			15x1170x1540			15x1170x1620			15x990x1170			M10x30			Ø22		
⑮ 909637	PCS	48	⑯ 909638	PCS	96	⑰ 909876	PCS	88	⑱ 910744	PCS	2	⑲ 910768	PCS	4	⑳ 910769	PCS	4			
M10			Ø20/10.5			M8x40			154x1160x1445			30x60x1349			30x60x1504					

Copyright Lappset Group Ltd

LAPPSET® 081743M

DATE: 17.12.2019

(21) 910789	PCS	(22) 910790	PCS	(23) 910791	PCS	(24) 910792	PCS	(25) 910793	PCS	(26) 910794	PCS
	1		1	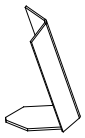	1		1		1		1
L 1528		L 796		L 1016		L 254		L 2158		L 1425	

(27) 910795	PCS	(28) 910796	PCS	(29) 980108	PCS	(30) 980128	PCS	(31) 980150	PCS	(32) 980151	PCS
	1	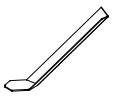	1		8		29		88		88
L 1646		L 884		Ø4x25		Ø7x40		M8		Ø16/8.4	

709387+

FOOT OPTION

709386 SURFACE	PCS	910567 CONCRETE	PCS
	2	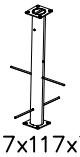	8
M16x170		117x117x715	

EN Impact Attenuating Surface (IAS) 24.4 m2

Falling Space 31 m2

Max Falling Height 1740 mm

1:75

0 3

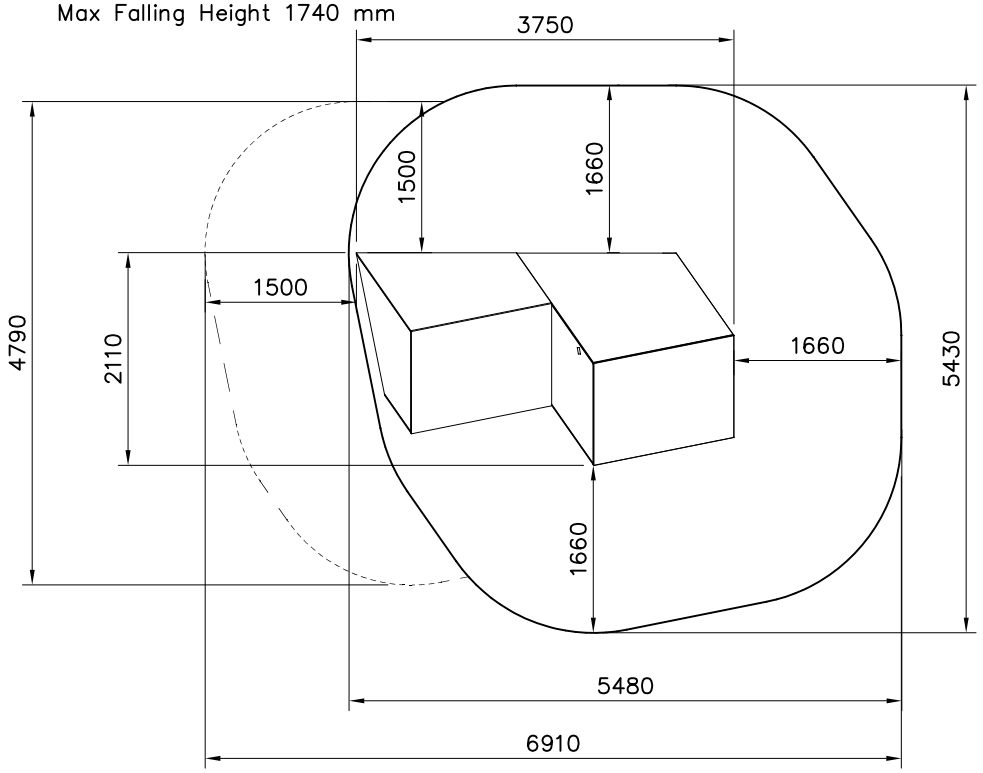

Copyright 1998 Lappset Group Ltd

LAPPSET®

081743M

DATE: 17.12.2019

HIGH

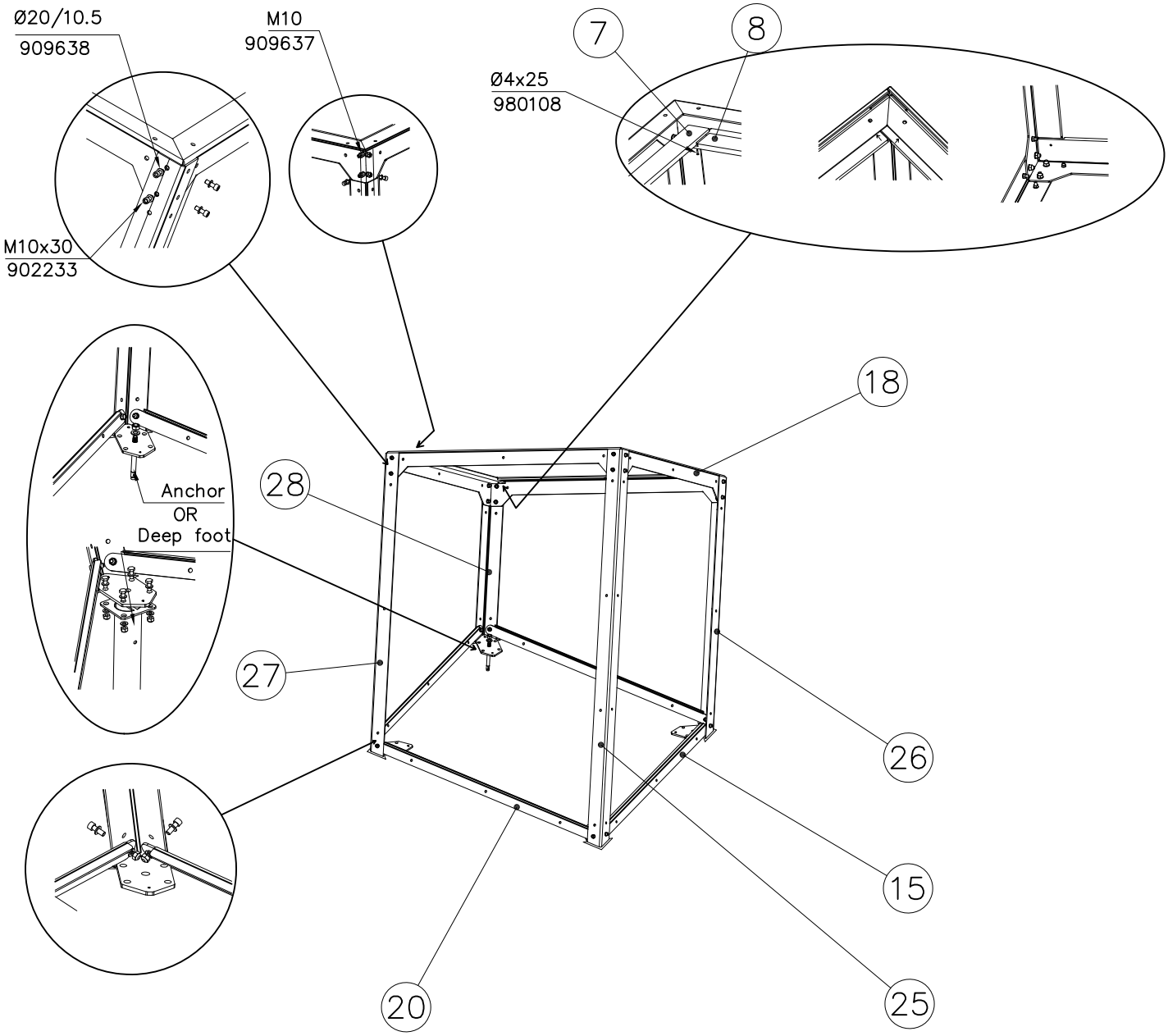

Copyright 1998 Lappset Group Ltd

LAPPSET®

081743M

DATE: 17.12.2019

HIGH

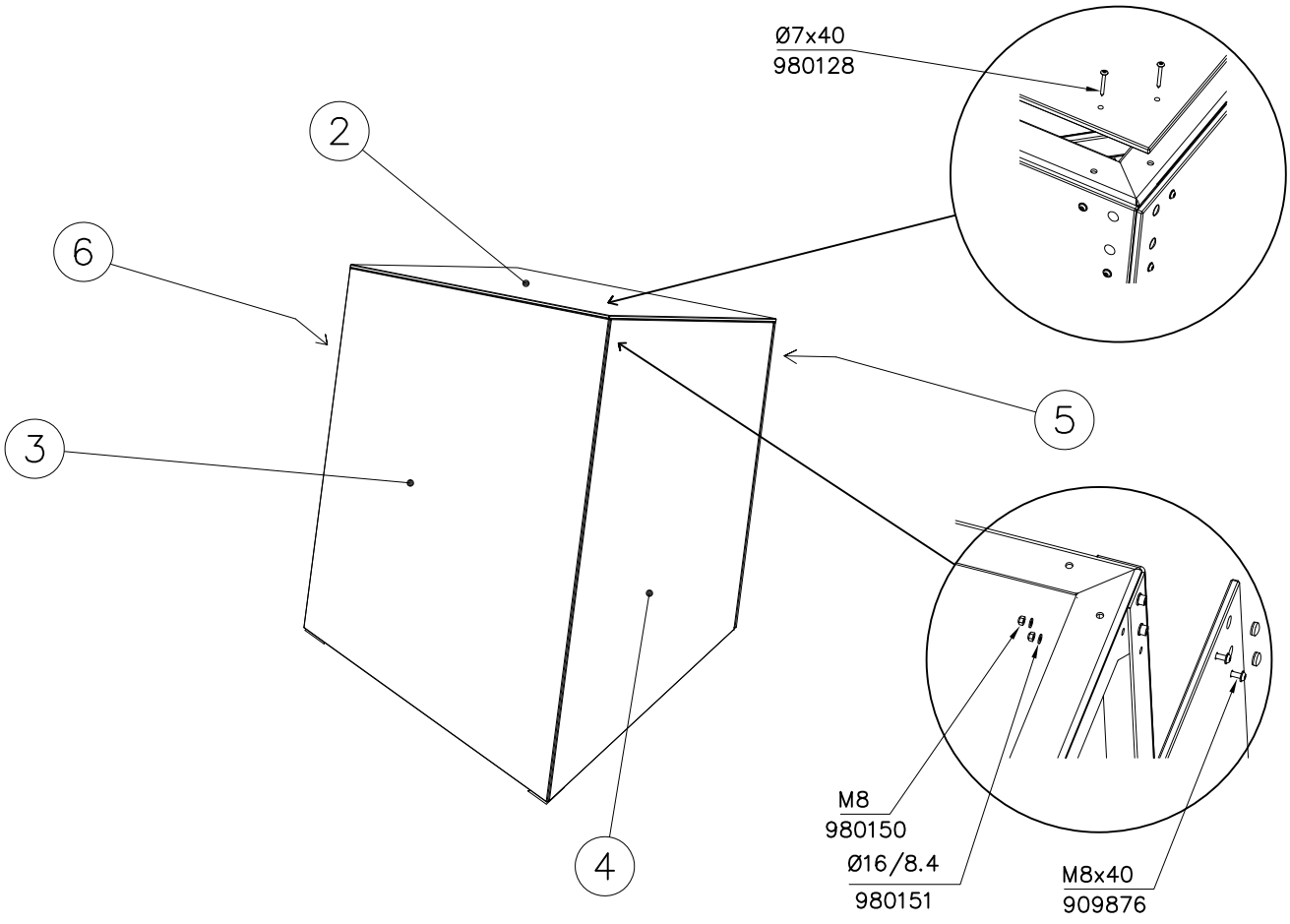

Copyright 1998 Lappset Group Ltd

LOW

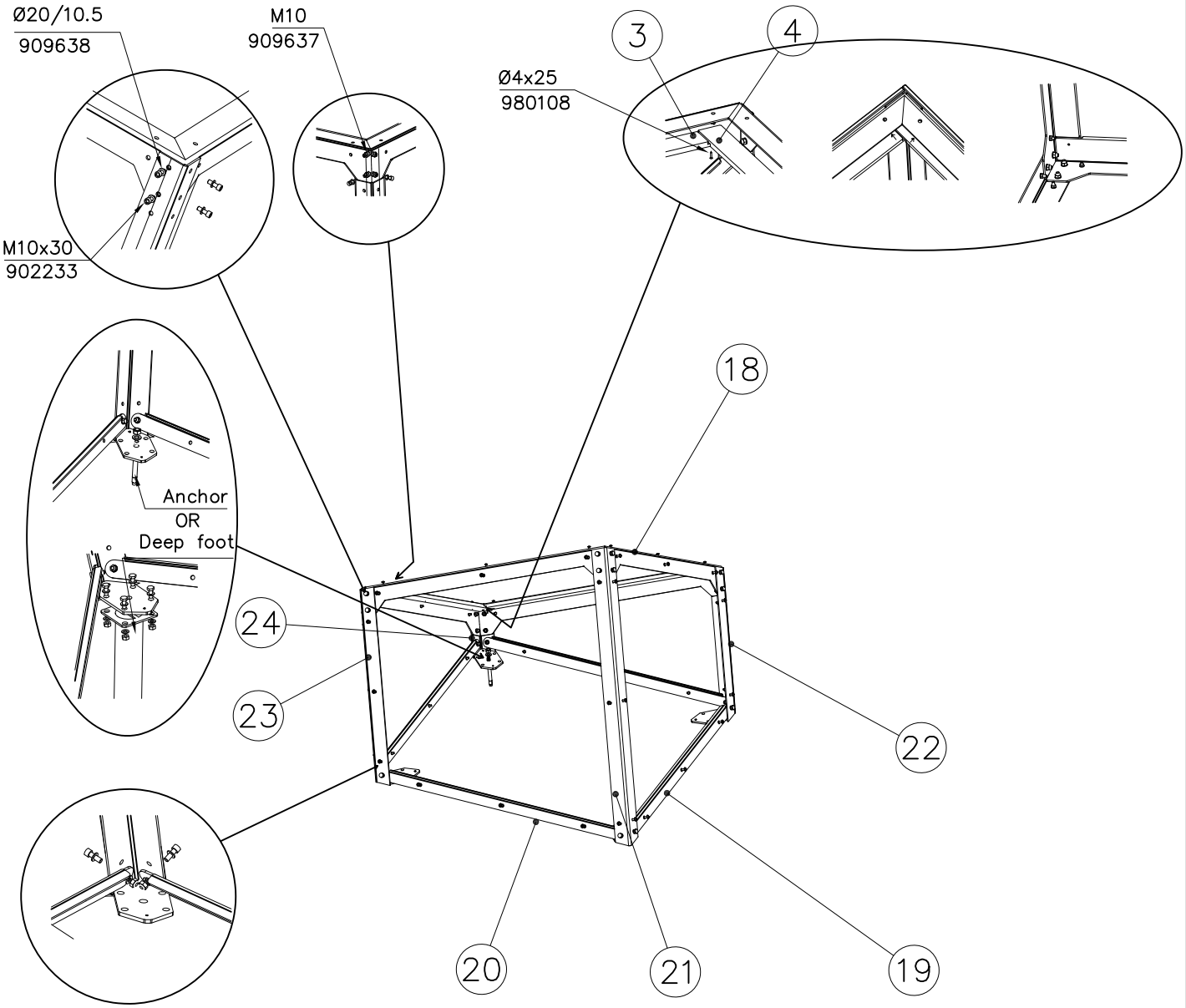

Copyright 1998 Lappset Group Ltd

LAPPSET®

081743M

DATE: 17.12.2019

LOW

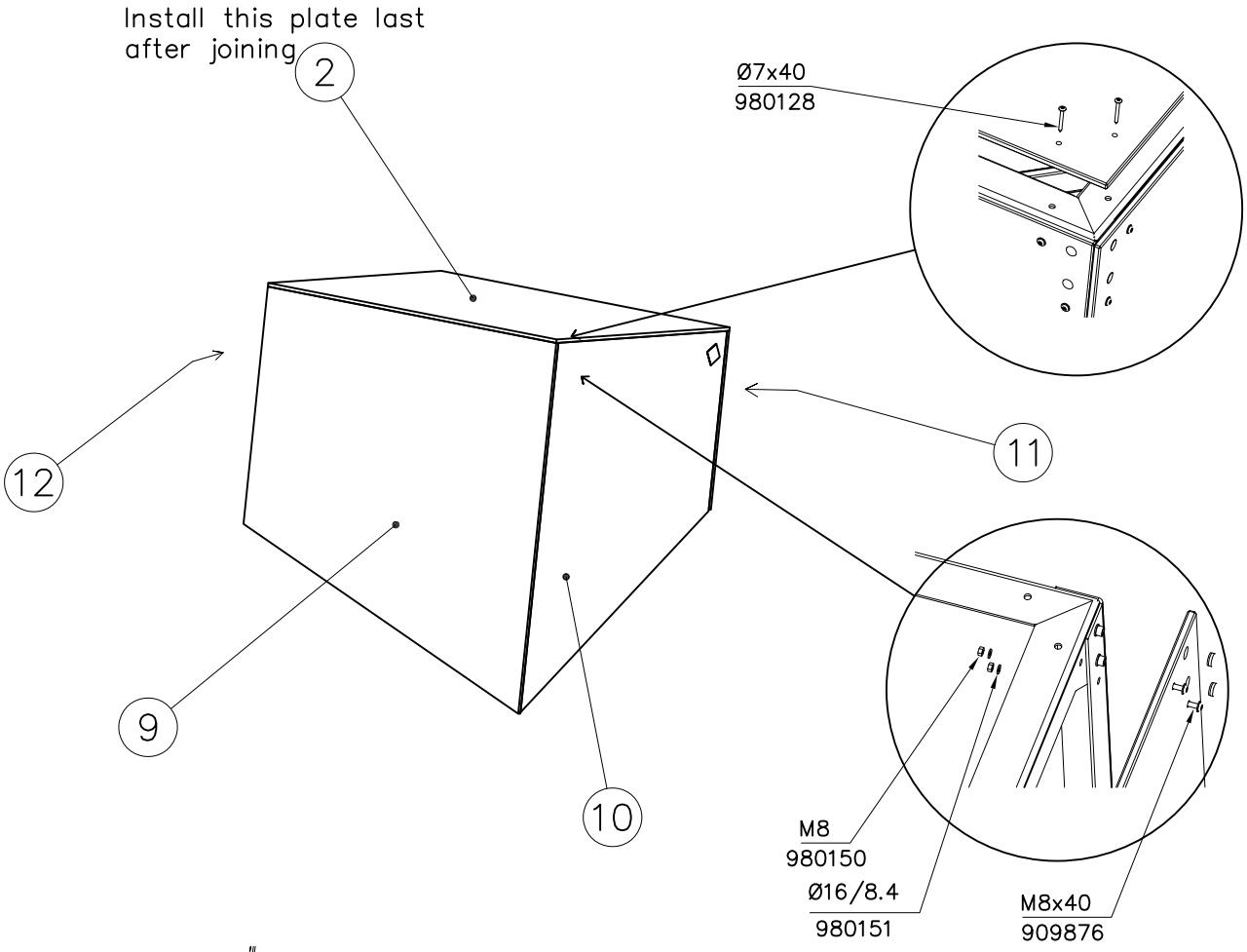

JOINING TOGETHER

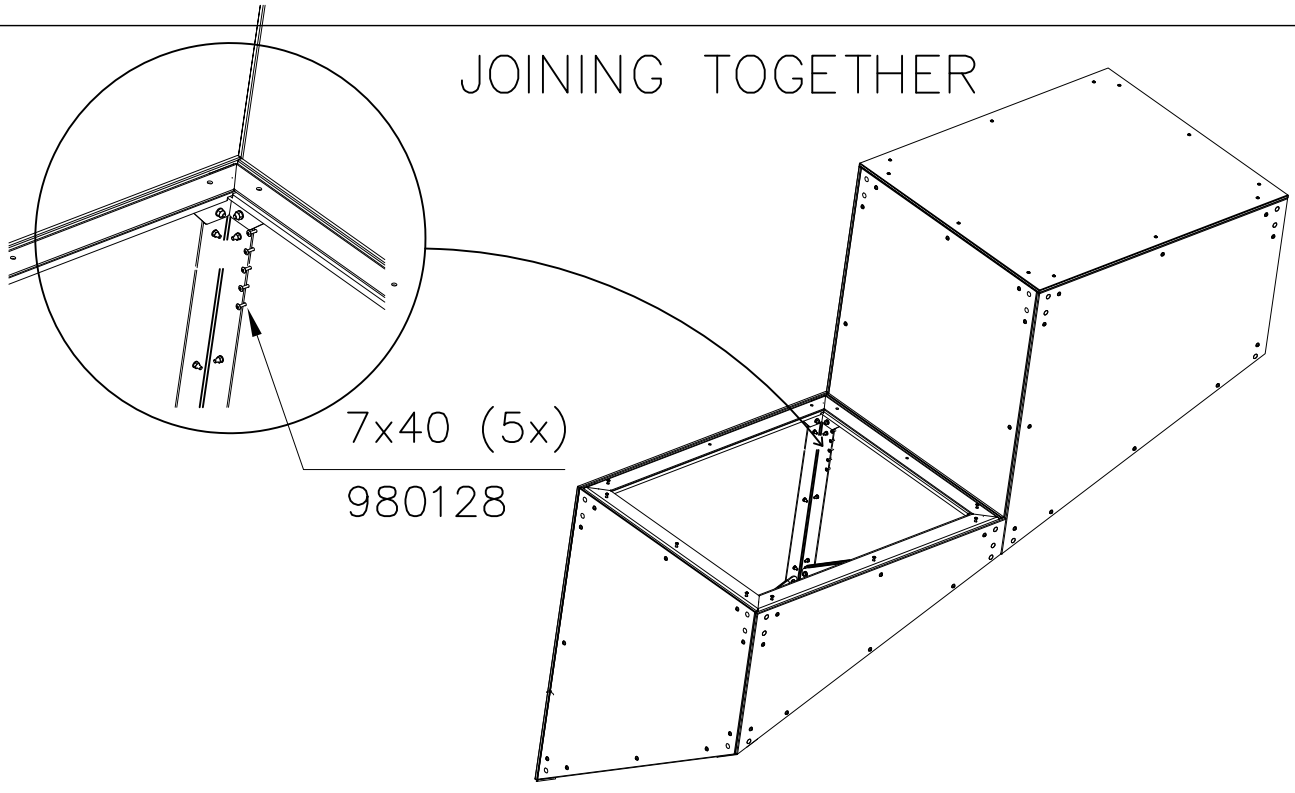

Copyright 1998 Lappset Group Ltd

LAPPSET®

081752M

DATE: 17.6.2020

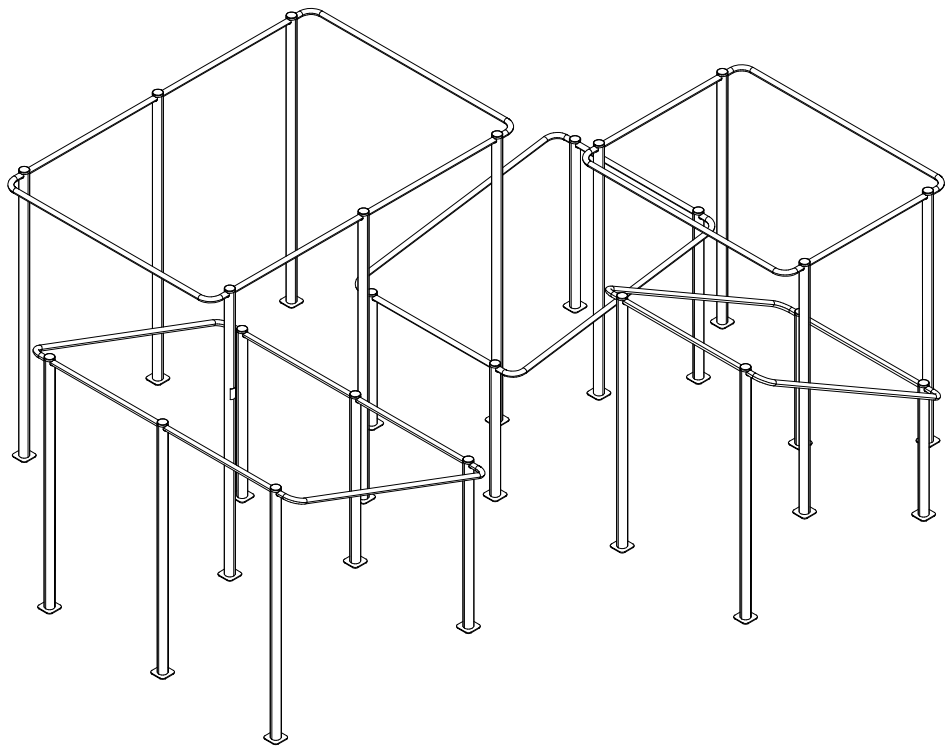

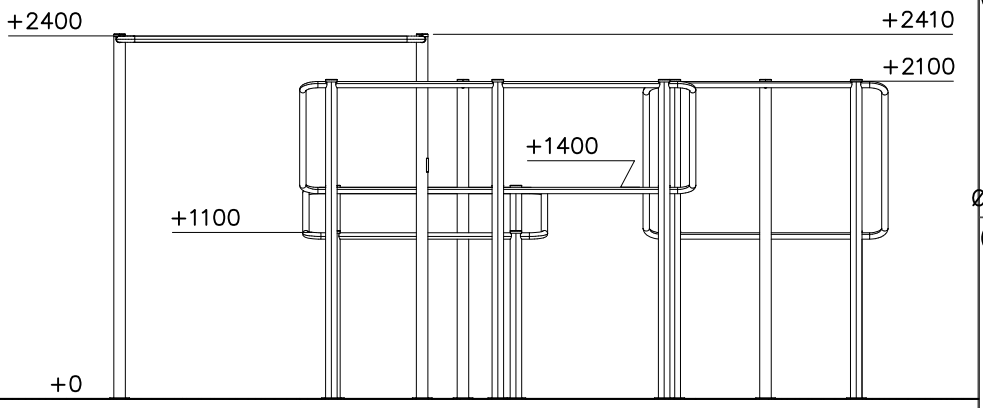

① 702341	PCS 1		90x50	② 704879	PCS 24
③ 708880	PCS 24		Ø77x20	④ 980151	PCS 20
⑤ 904133	PCS 48		M10x80	⑥ 909258	PCS 20
⑦ 909633	PCS 20		M8	⑧ 910547	PCS 6
⑨ 910549	PCS 10		Ø42.4x286x2042	⑩ 910556	PCS 6
⑪ 910557	PCS 24		10x45x87	⑫ 910563	PCS 9
⑬ 910564	PCS 4	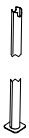	L 1100	⑭ 910565	PCS 5
⑮ 910704	PCS 2		Ø42.4x2600	⑯ 910548	PCS 2

INSTALLING FOR SURFACE MOUNTING

○ 709396	PCS 24	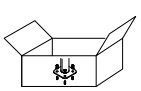

FOOT OPTION FOR DEEP MOUNTING

709397+

○ 910562	PCS 24	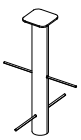	L 600

Copyright Lappset Group Ltd

LAPPSET®

081752M

DATE: 17.6.2020

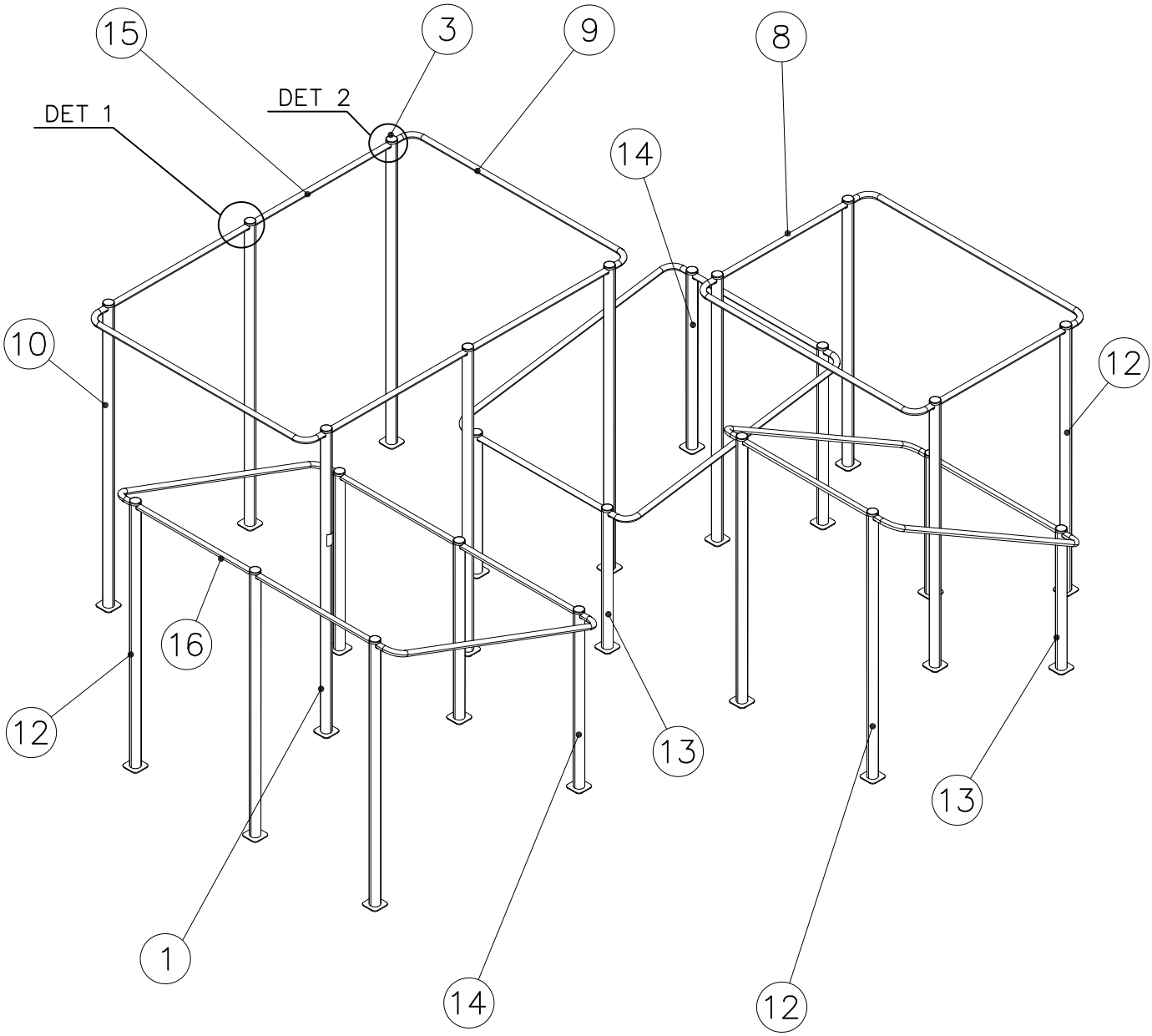

DET 1

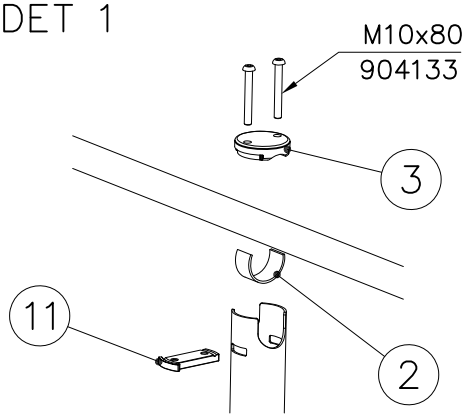

DET 2

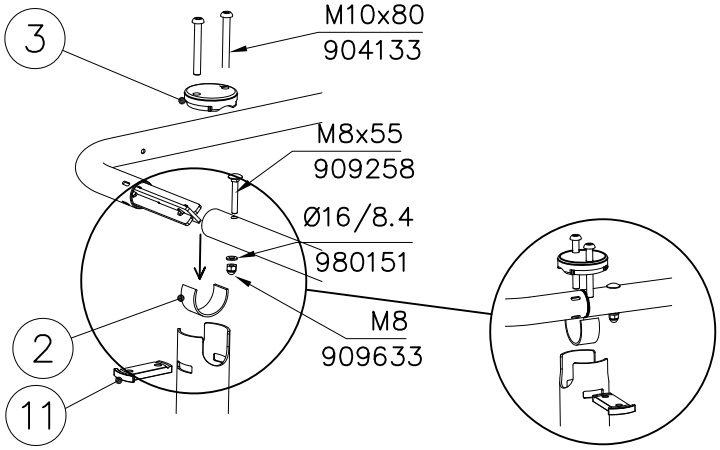

Copyright 1998 Lappset Group Ltd

LAPPSET®

081752M

DATE: 17.6.2020

——— EN Impact Attenuating Surface (IAS) 71.3 m2

– – – – Falling Space 71.3 m2

Max Falling Height 2410 mm

1:75

0 3

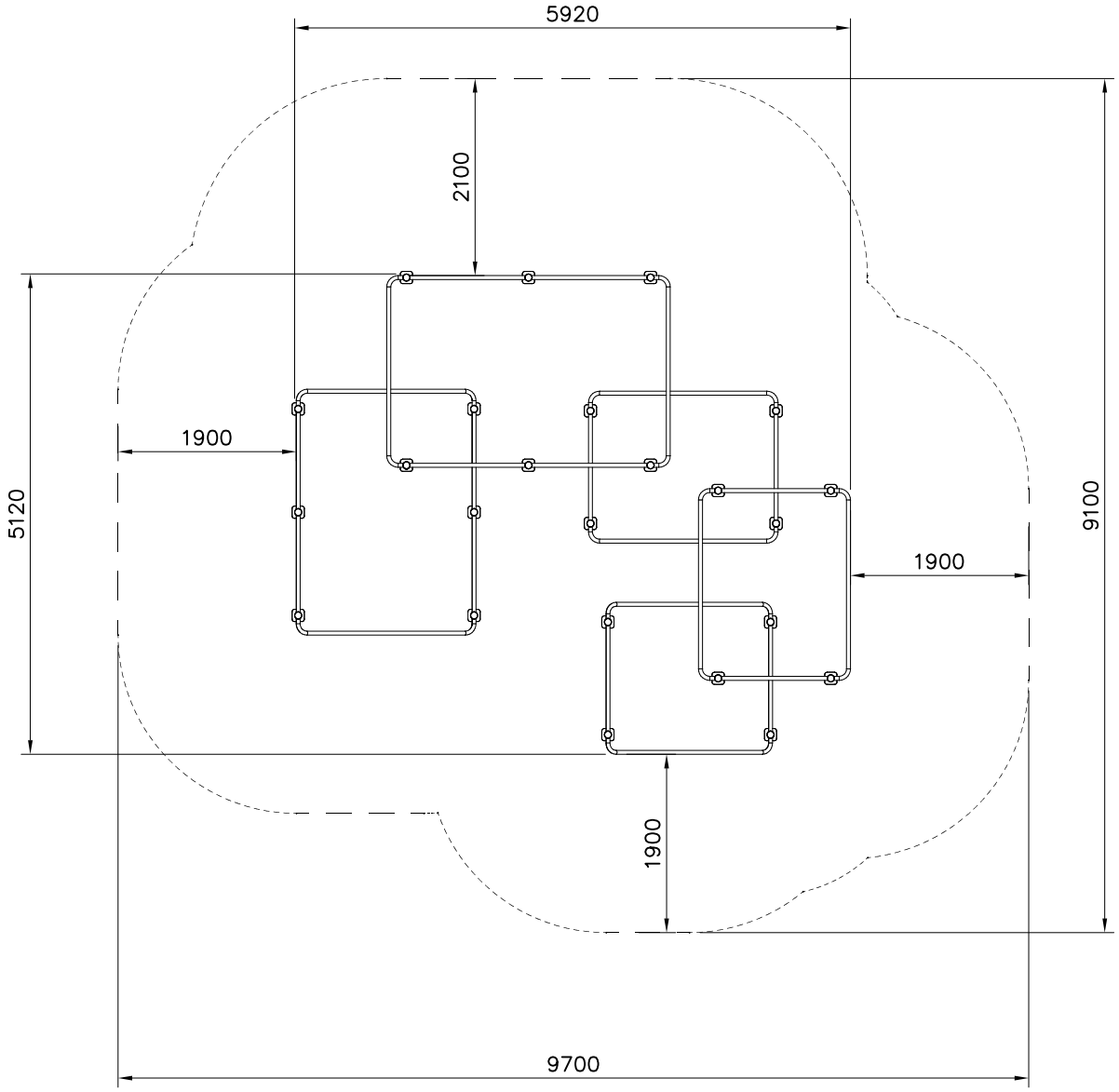

Copyright 1998 Lappset Group Ltd

LAPPSET®

081752M

DATE: 17.6.2020

EN Impact Attenuating Surface (IAS) 71.3 m2

Grid size 500mm

1:75

0 3

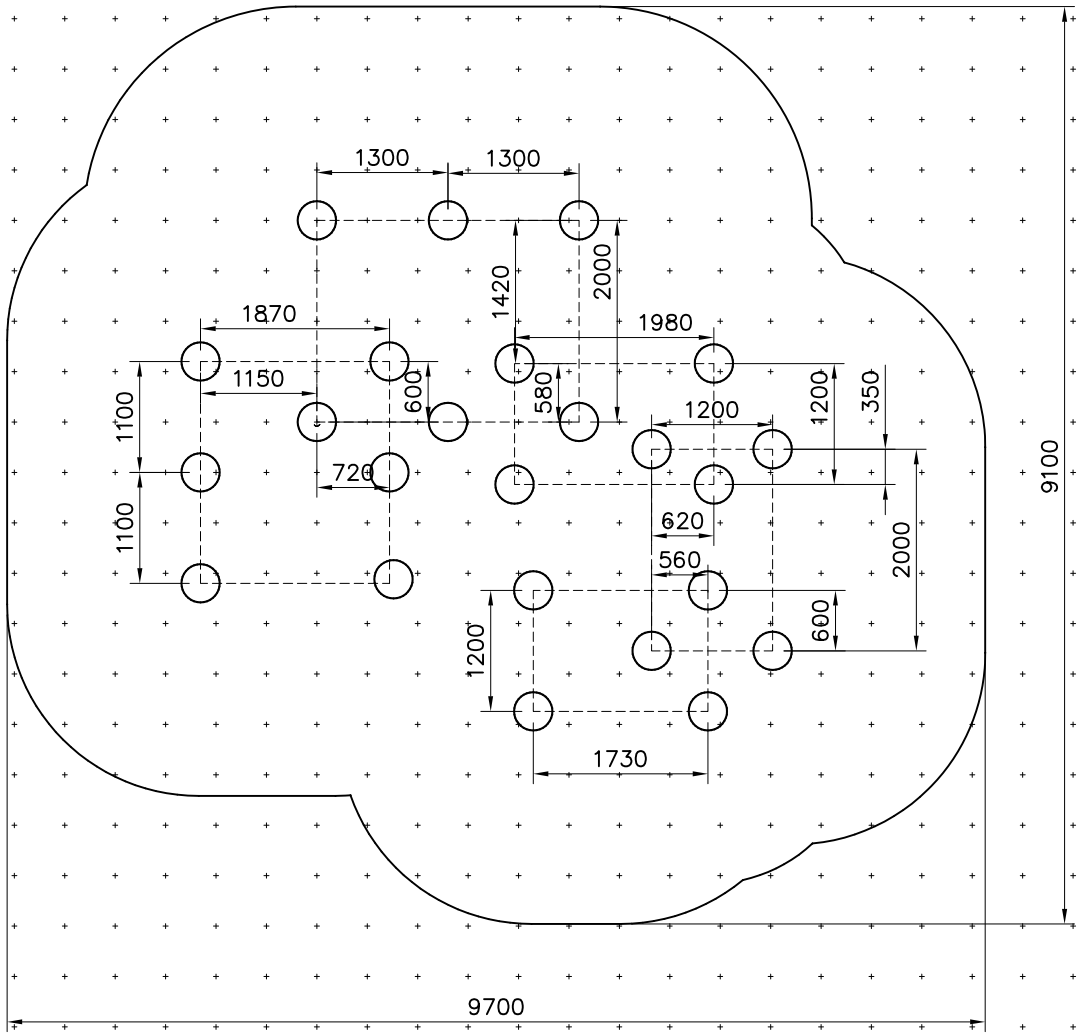

Copyright 1998 Lappset Group Ltd

LAPPSET® 081701M

DATE: 9.8.2019

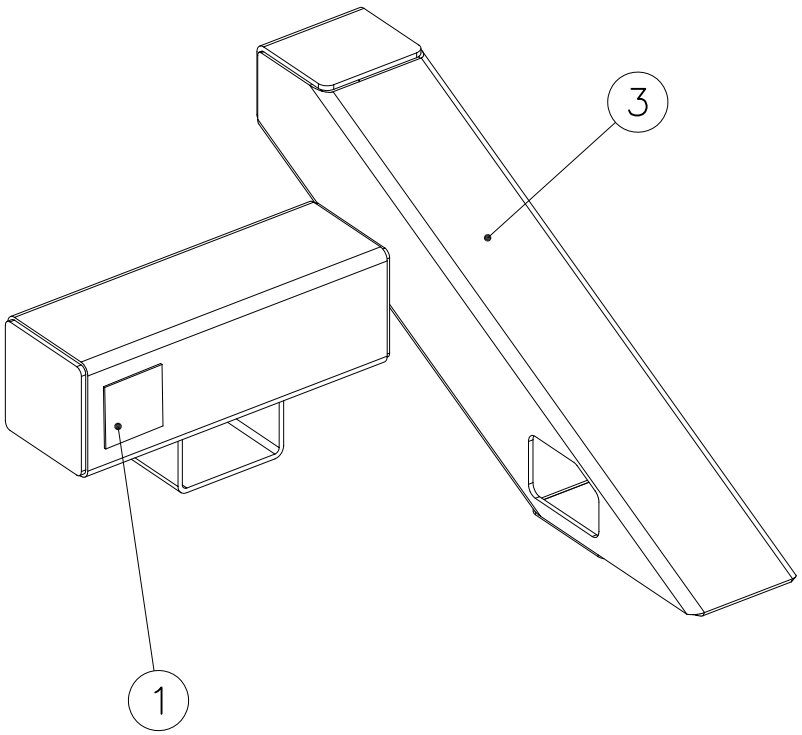

		PCS
1	702341	1
	90x50	
2	709381	2
	SURFACE	
3	910220	1
	300x470x662	

FOOT OPTION FOR DEEP MOUNTING

709379+

		PCS
○	902564	2
	L 550	

1:50

0 2

---- Falling Space 10.8 m2

Max Falling Height 300 mm

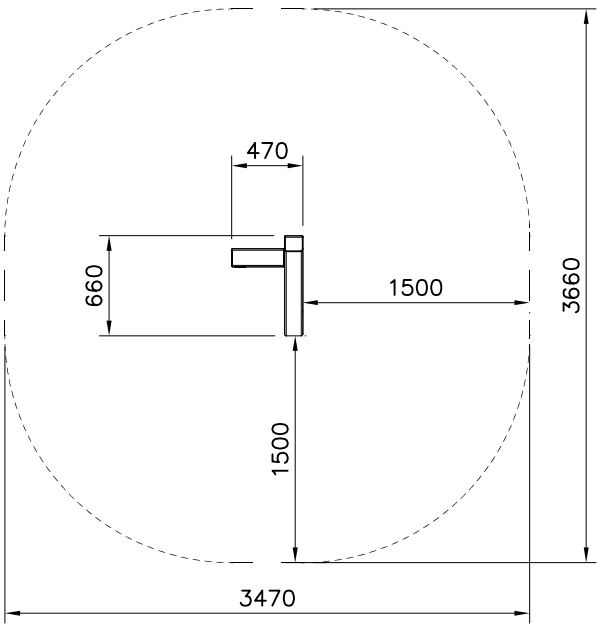

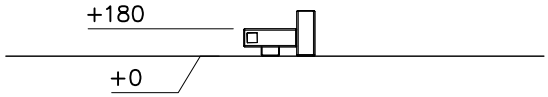

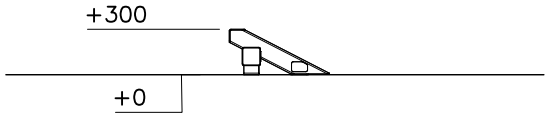

Copyright Lappset Group Ltd

LAPPSET® 081702M

DATE: 12.8.2019

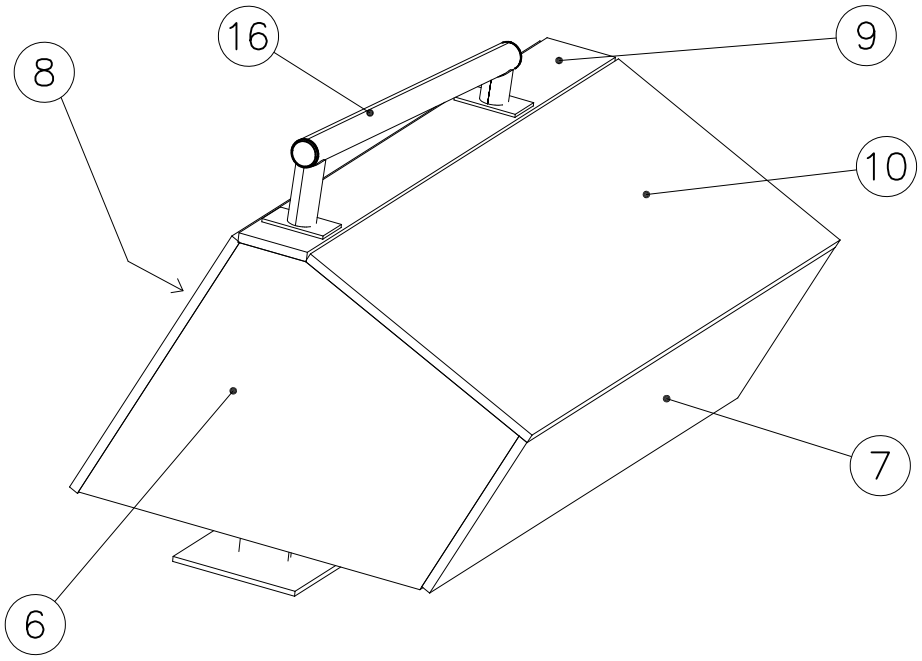

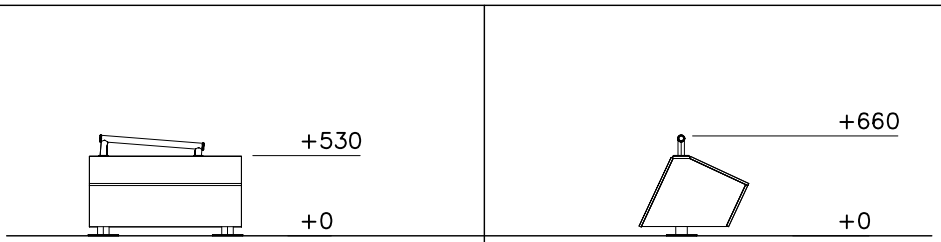

DET 1

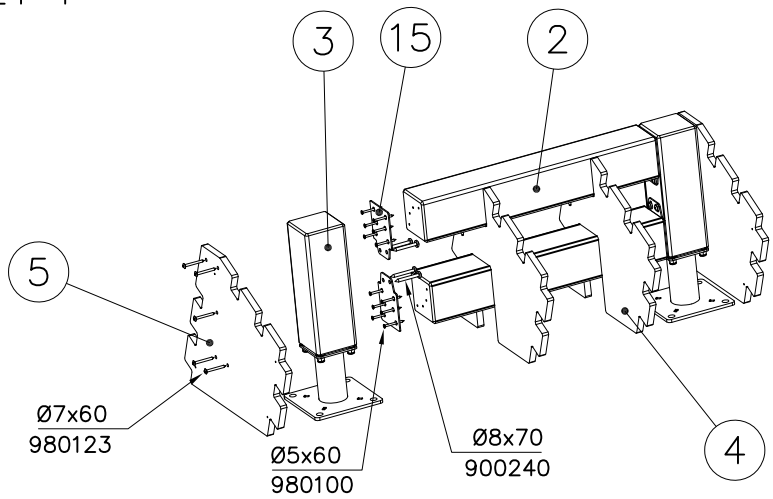

① 702341	PCS 1	90x50	② 708109	PCS 2	118x118x697	③ 708443	PCS 2	118x118x352	④ 708848	PCS 2	18x450x690	⑤ 708849	PCS 2	18x450x690	⑥ 708850	PCS 2	15x450x690
⑦ 708851	PCS 1	15x300x1005	⑧ 708852	PCS 1	15x500x1005	⑨ 708853	PCS 1	15x112x1005	⑩ 708854	PCS 1	15x425x1005	⑪ 708855	PCS 8	45x45x975	⑫ 900240	PCS 8	Ø8x70
⑬ 903093	PCS 4	Ø8x90	⑭ 908371	PCS 2	42–38/40	⑮ 908698	PCS 4	3x114x108	⑯ 910056	PCS 1	140x690	⑰ 980100	PCS 24	Ø5x60	⑱ 980104	PCS 32	Ø5x90
⑲ 980123	PCS 27	Ø7x60	⑳ 980128	PCS 14	Ø7x40												

Copyright Lappset Group Ltd

LAPPSET®

081702M

DATE: 12.8.2019

709261+			709262+		
○ 910330	PCS		○ 910567	PCS	
SURFACE	2		CONCRETE	2	
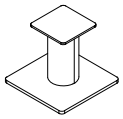			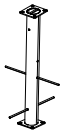		
152x200x200			117x117x715		

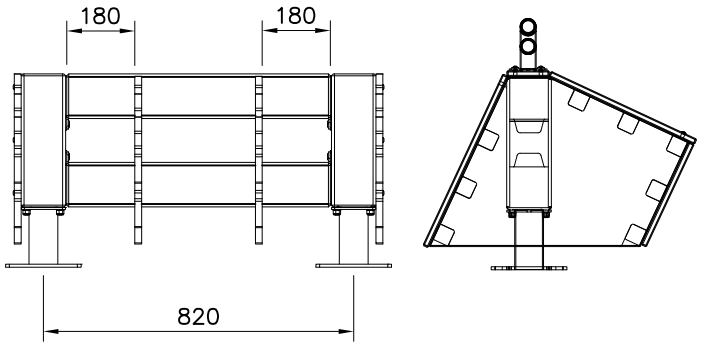

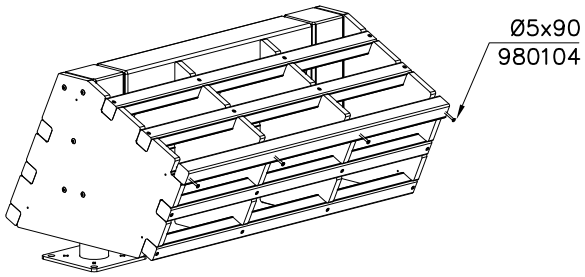

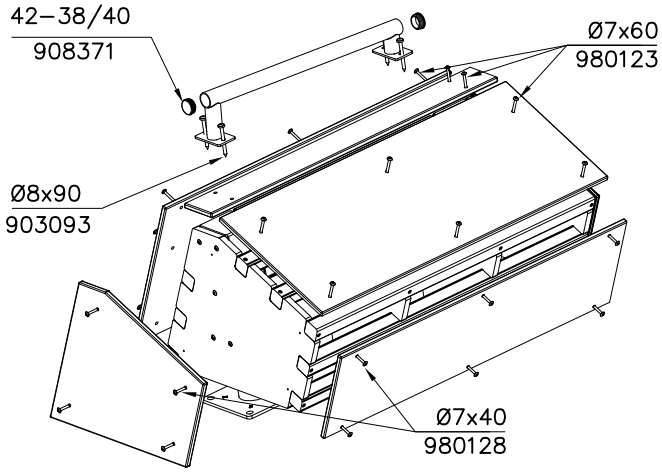

1:50

0 2

---- Falling Space 13 m2

Max Falling Height 660 mm

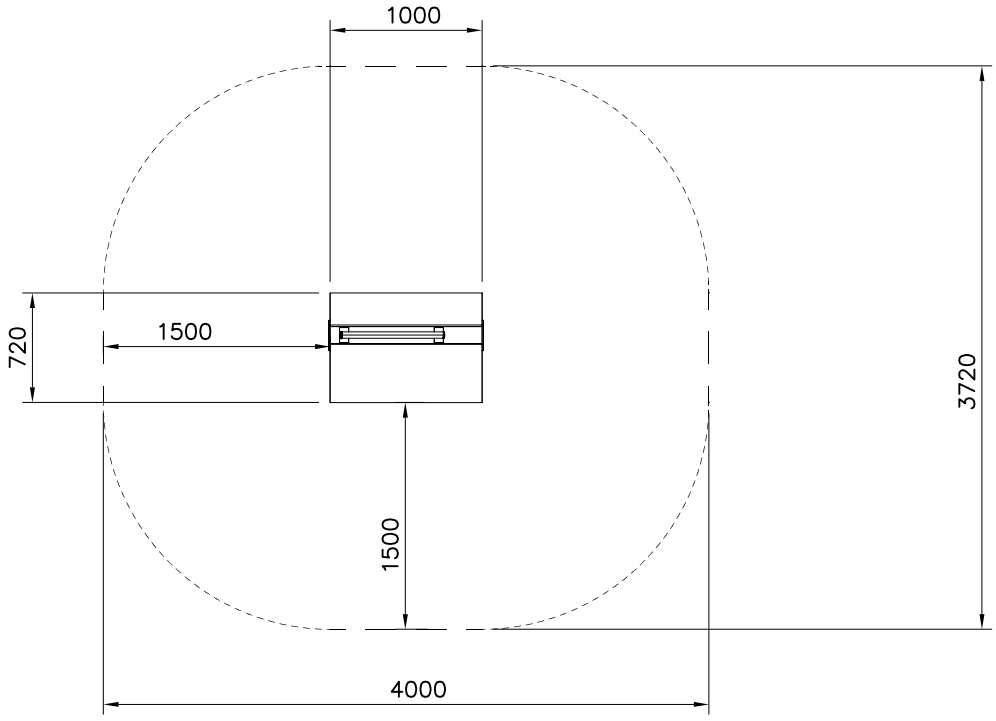

Copyright 1998 Lappset Group Ltd

LAPPSET®

081710M

DATE: 18.6.2019

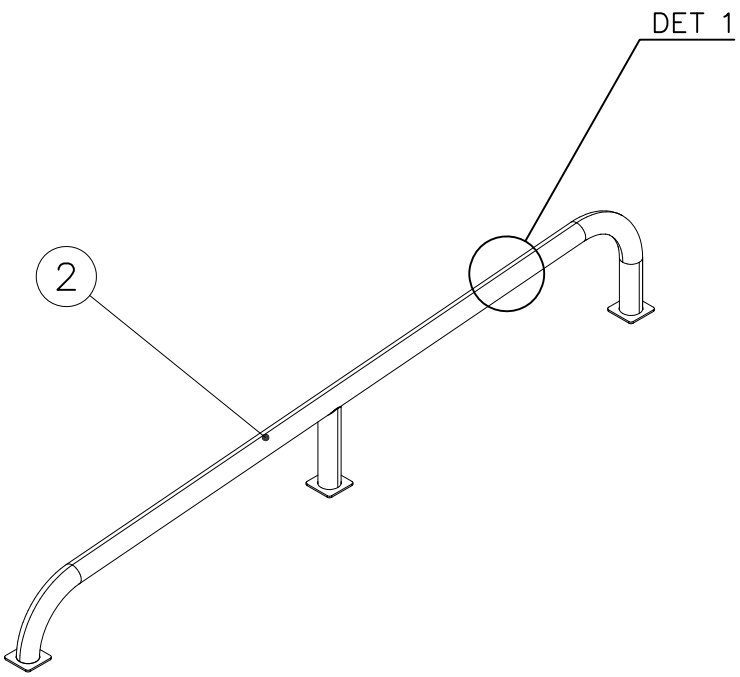

1 702341 90x50	PCS 1	2 910253 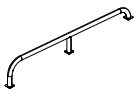 Ø60x376x2290	PCS 1
3 903533 SRL12	PCS 4		PCS

---- Falling Space 14.2 m2
Max Falling Height 380 mm

1:50
0 2

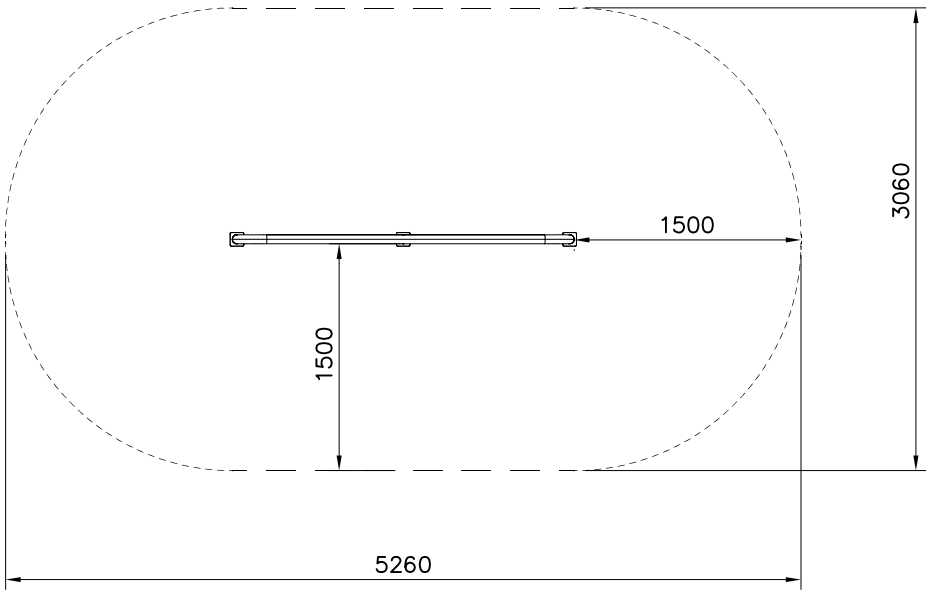

Copyright Lappset Group Ltd

LAPPSET®

081710M

DATE: 18.6.2019

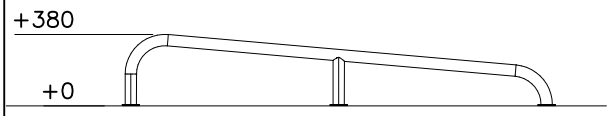

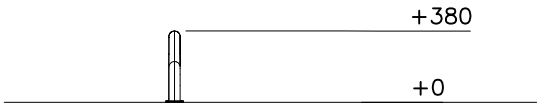

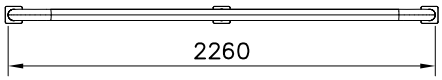

DET 1

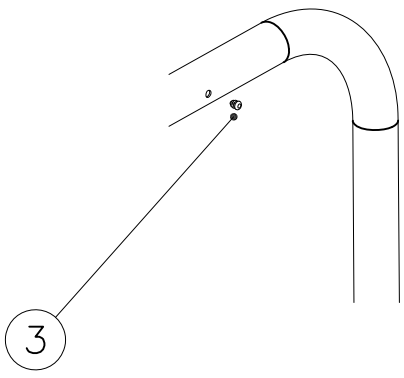

Copyright 1998 Lappset Group Ltd

LAPPSET® 081712M

DATE: 18.6.2019

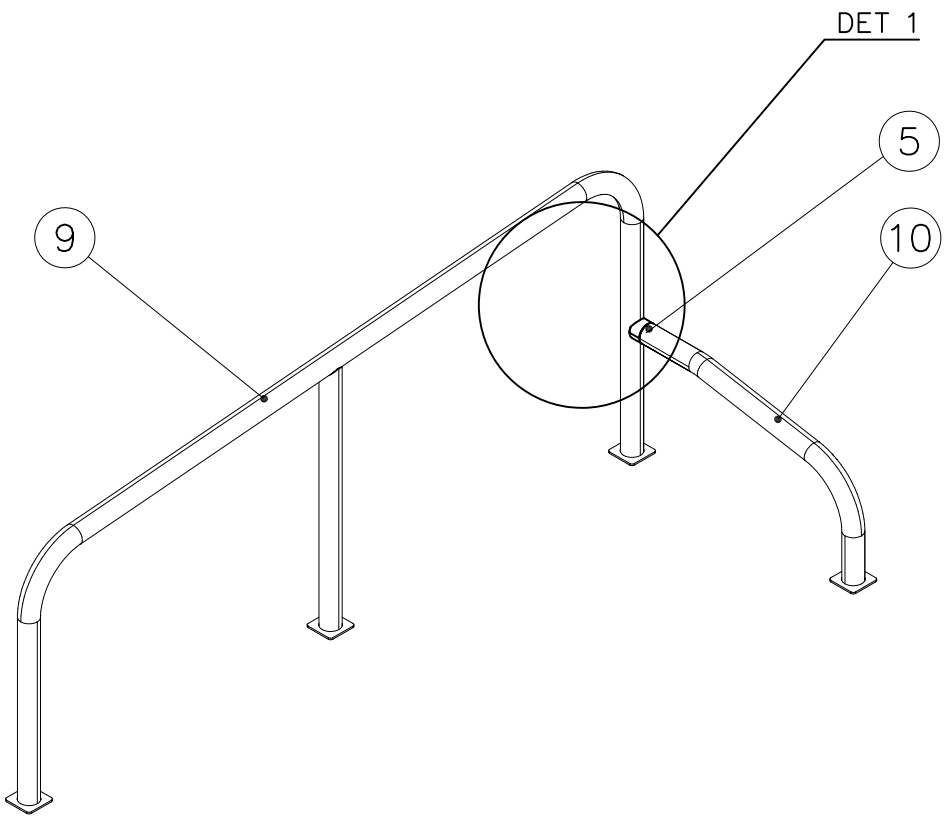

OPTION LEFT–HANDED

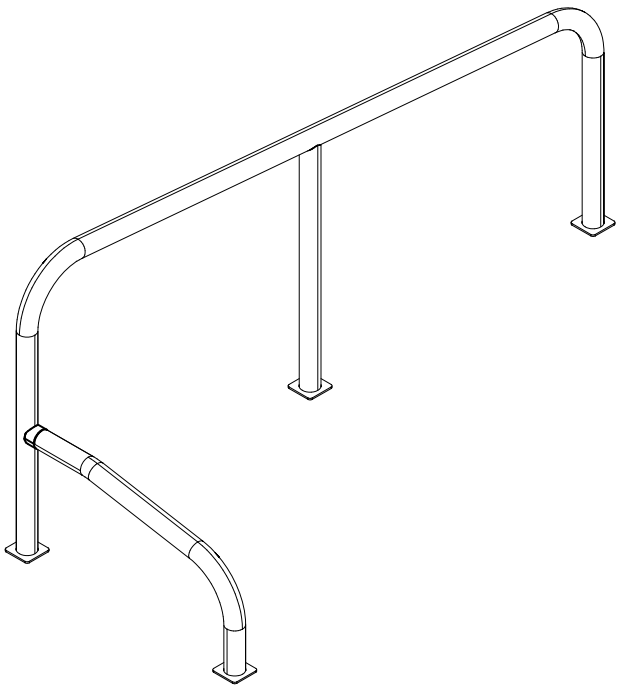

		PCS			PCS
① 702341	90x50	1	② 900965	M10	1
③ 903533	SRL12	4	④ 904133	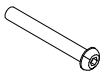 M10x80	1
⑤ 908069	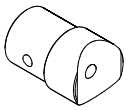 Ø60x87.6	1	⑥ 909111	M12x100	1
⑦ 909248	M12	1	⑧ 909638	Ø20/10.5	4
⑨ 910255	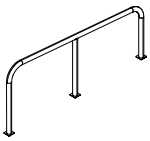 Ø60x950x2290	1	⑩ 910262	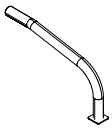 Ø60x435x795	1
⑪ 980154	Ø24/13	1			

Copyright Lappset Group Ltd

LAPPSET®

081712M

DATE: 18.6.2019

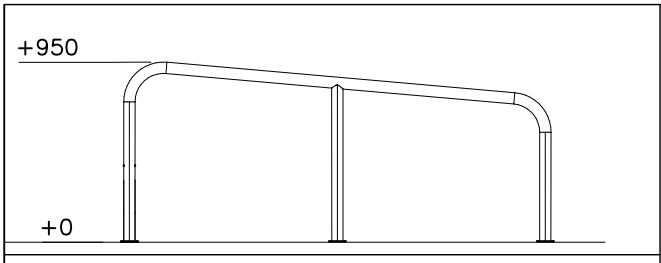

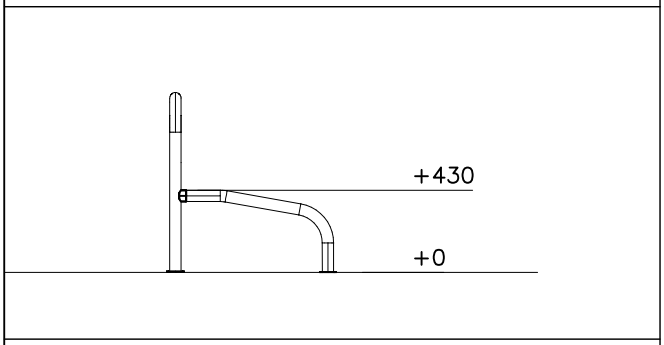

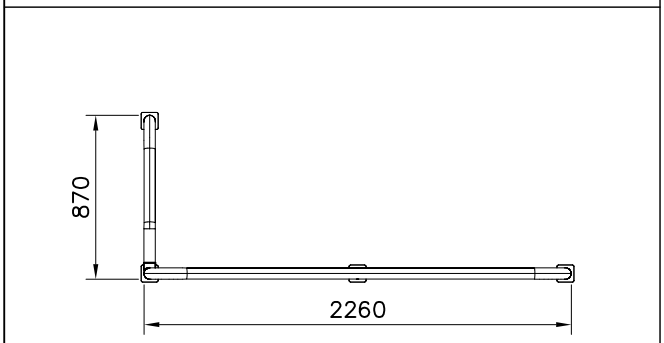

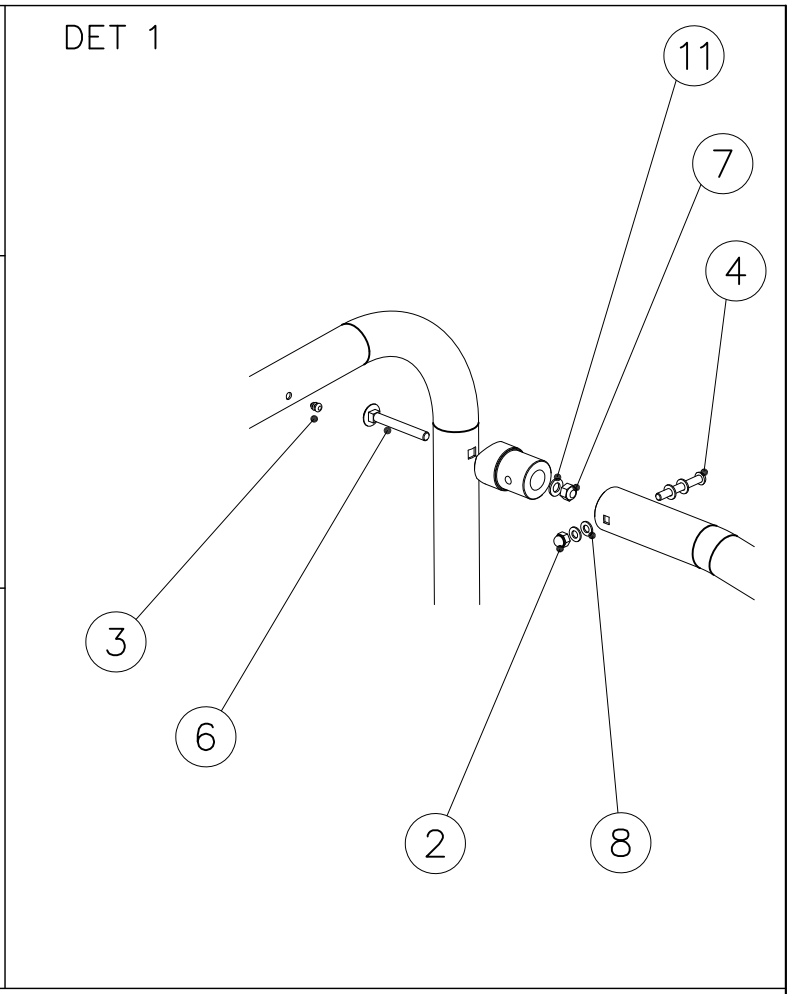

1:50
0 2

– – – – Falling Space 16.2 m2
Max Falling Height 950 mm

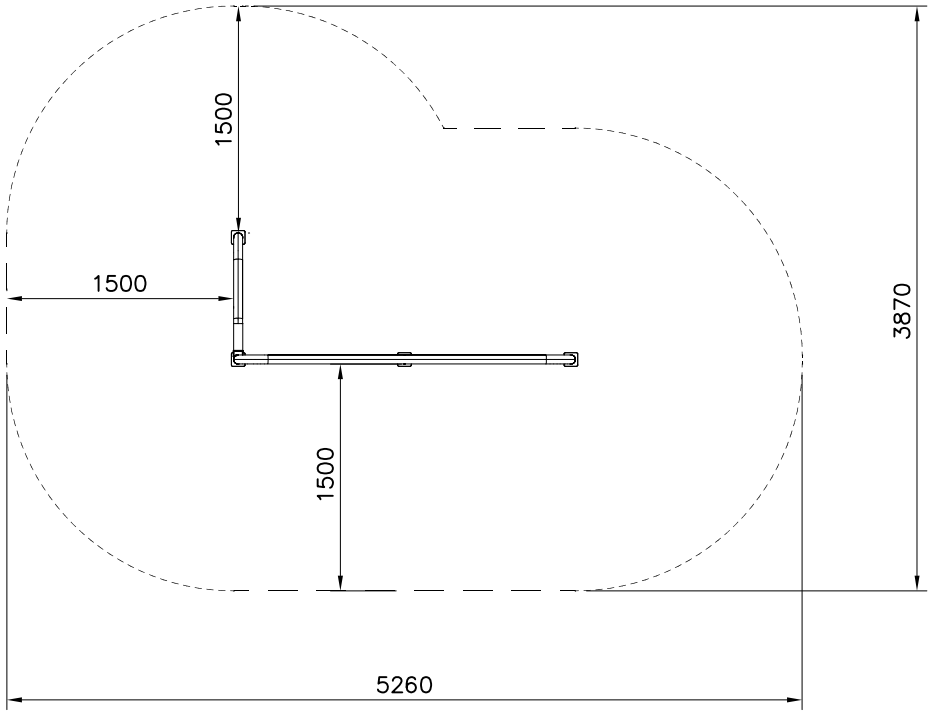

Copyright 1998 Lappset Group Ltd

LAPPSET® 081720M

DATE: 5.9.2019

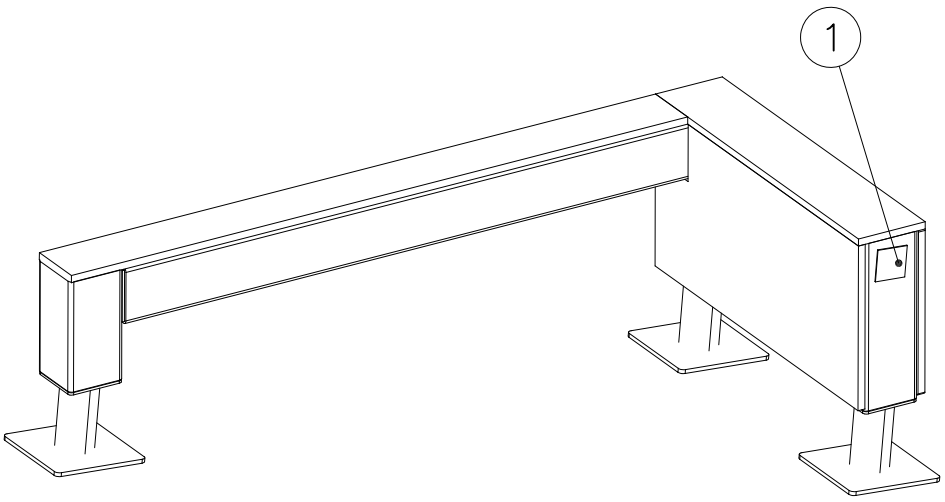

		PCS			PCS
1	702286	1	2	707210	2
	65x65			118x118x503	
3	707212	1	4	708347	1
	118x118x1254			118x118x231	
5	708443	2	6	708727	1
	118x118x352			15x346x745	

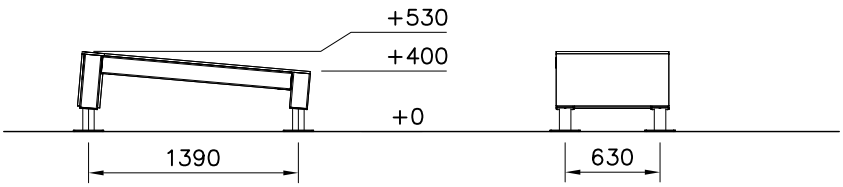

		PCS			PCS
7	708730	1	8	708733	1
	15x346x745			15x148x745	
9	708734	1	10	708857 JIG	1
	15x118x1365			20x133x149	

INSTALLATION OF A SECOND HAND

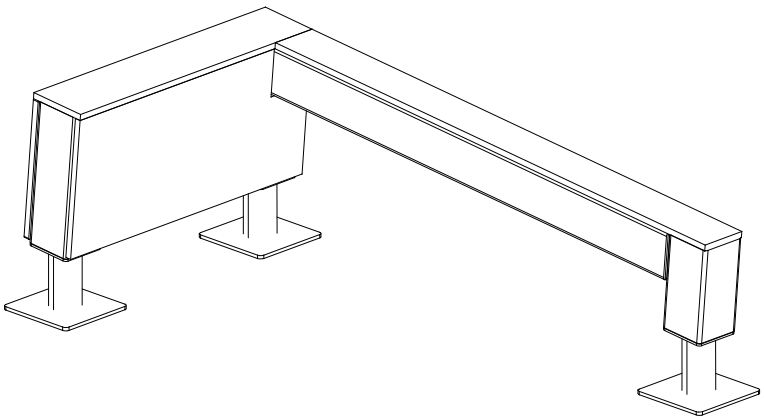

		PCS			PCS
11	910266	2	12	900240	16
	90x108x118			Ø8x70	
13	903093	4	14	905103	2
	Ø8x90			PT-28/32-H	
15	905112	4	16	908698	4
	Ø22			3x114x108	

Copyright Lappset Group Ltd

LAPPSET®

081720M

DATE: 5.9.2019

⑰ 980100	PCS	⑱ 980114	PCS	⑲ 980123	PCS
	28		4		25
Ø5x60		Ø4x20		Ø7x60	

FOOT OPTIONS

709261+		709262+	
◯ 910267 SURFACE	PCS 3	◯ 910567 CONCRETE	PCS 3
152x200x200		117x117x715	

– – – – Falling Space 13.8 m2
Max Falling Height 530 mm

1:50
0 2

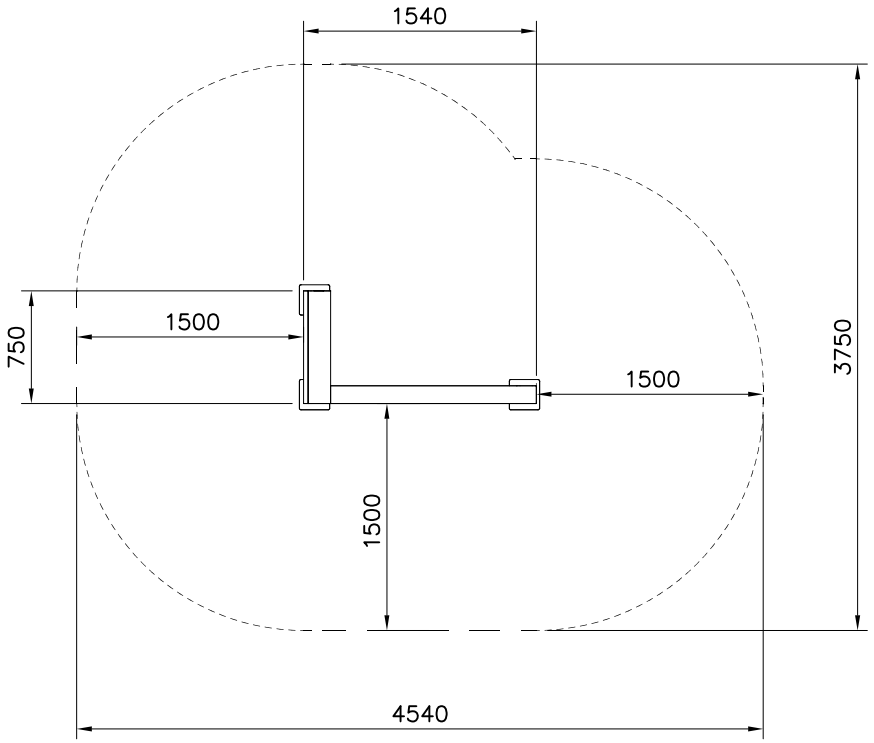

Copyright Lappset Group Ltd

LAPPSET®

081720M

FLORA

DATE: 5.9.2019

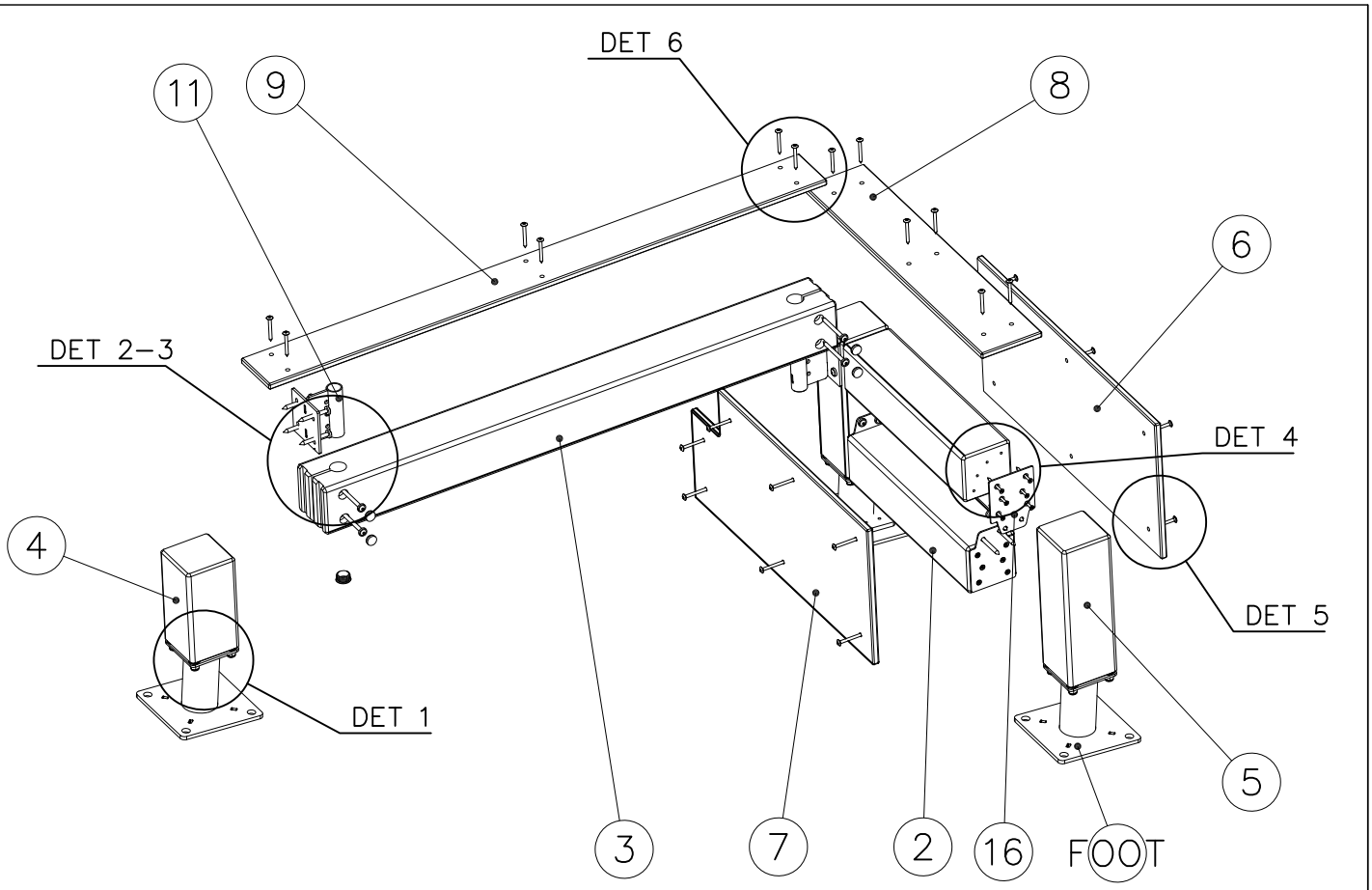

Copyright 1998 Lappset Group Ltd

LAPPSET® 081720M

DATE: 5.9.2019

DET 1

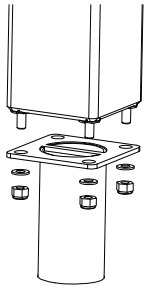

DET 2

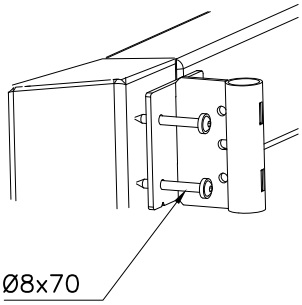

DET 3

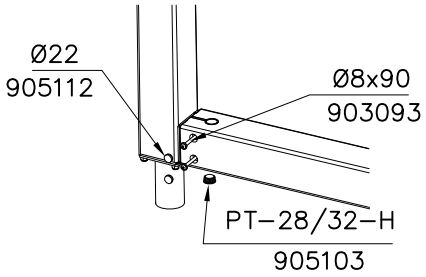

DET 4

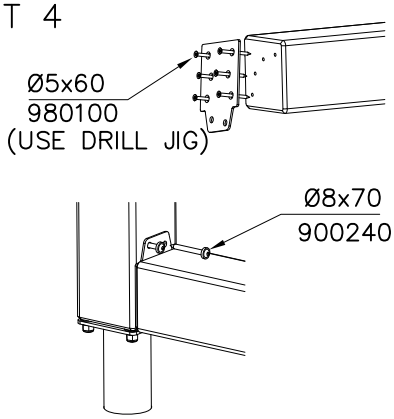

DET 5

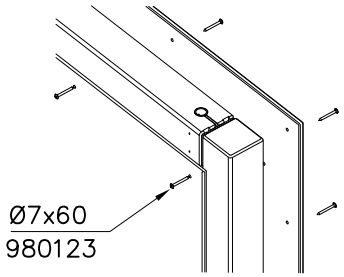

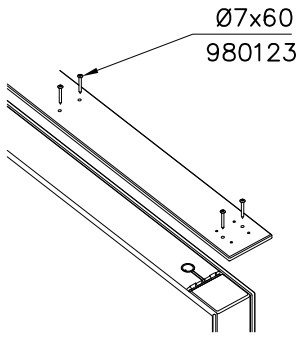

JIG DET A (USE DET 2–4)

NOTE:
Use drill jig 708857
to predrill Ø5↧50
holes for 910266
and 908698

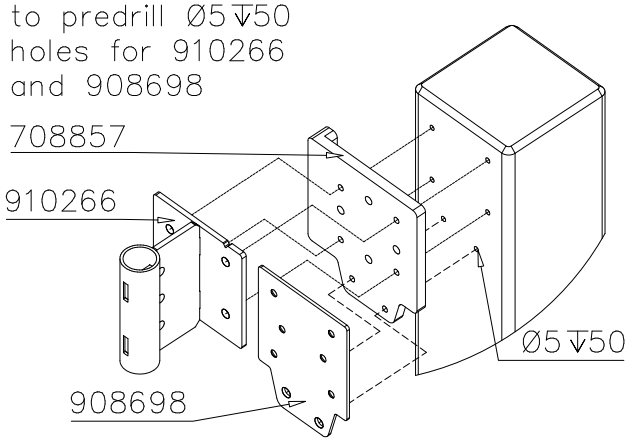

Copyright Lappset Group Ltd

LAPPSET® 081721M

DATE: 10.9.2019

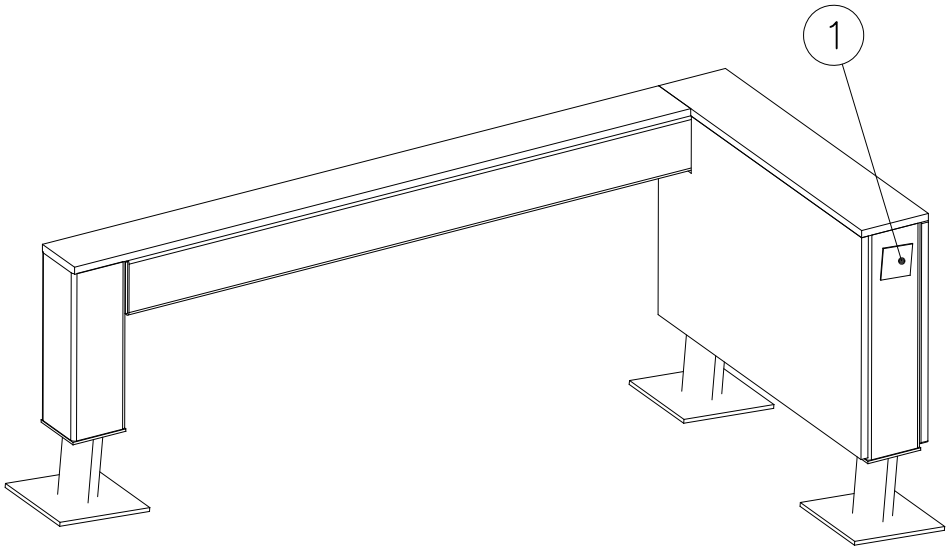

① 702286	PCS 1	65x65	② 707210	PCS 2	118x118x503
③ 707212	PCS 1	118x118x1254	④ 707889	PCS 2	118x118x472
⑤ 708443	PCS 1	118x118x352	⑥ 708733	PCS 1	15x148x745

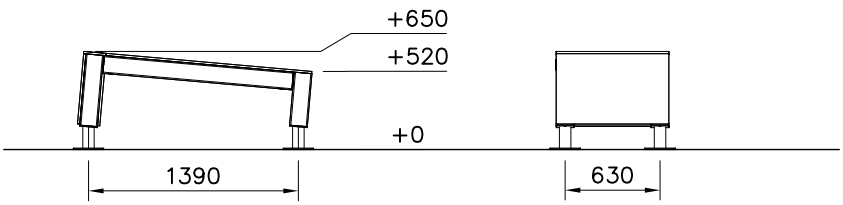

⑦ 708734	PCS 1	15x118x1365	⑧ 708857 JIG	PCS 1	20x133x149
⑨ 708731	PCS 1	15x466x745	⑩ 900240	PCS 16	Ø8x70

INSTALLATION OF A SECOND HAND

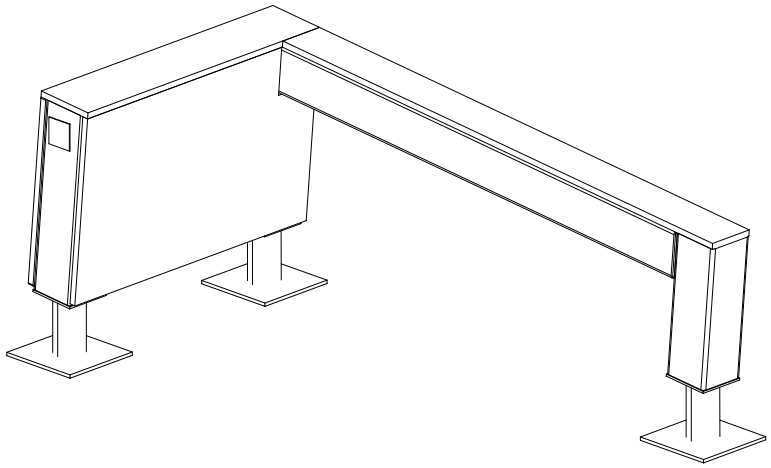

⑪ 903093	PCS 4	Ø8x90	⑫ 905103	PCS 2	PT-28/32-H
⑬ 905112	PCS 4	Ø22	⑭ 908698	PCS 4	3x114x108
⑮ 910266	PCS 2	90x108x118	⑯ 708732	PCS 1	15x466x745

Copyright Lappset Group Ltd

LAPPSET®

081721M

DATE: 10.9.2019

17 980100	PCS	18 980114	PCS	19 980123	PCS
	28		4		25
Ø5x60		Ø4x20		Ø7x60	

FOOT OPTIONS

709261+		709262+	
910267 SURFACE	PCS 3	910567 CONCRETE	PCS 3
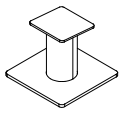			
152x200x200		117x117x715	

– – – – Falling Space 13.8 m2
Max Falling Height 650 mm

1:50
0 2

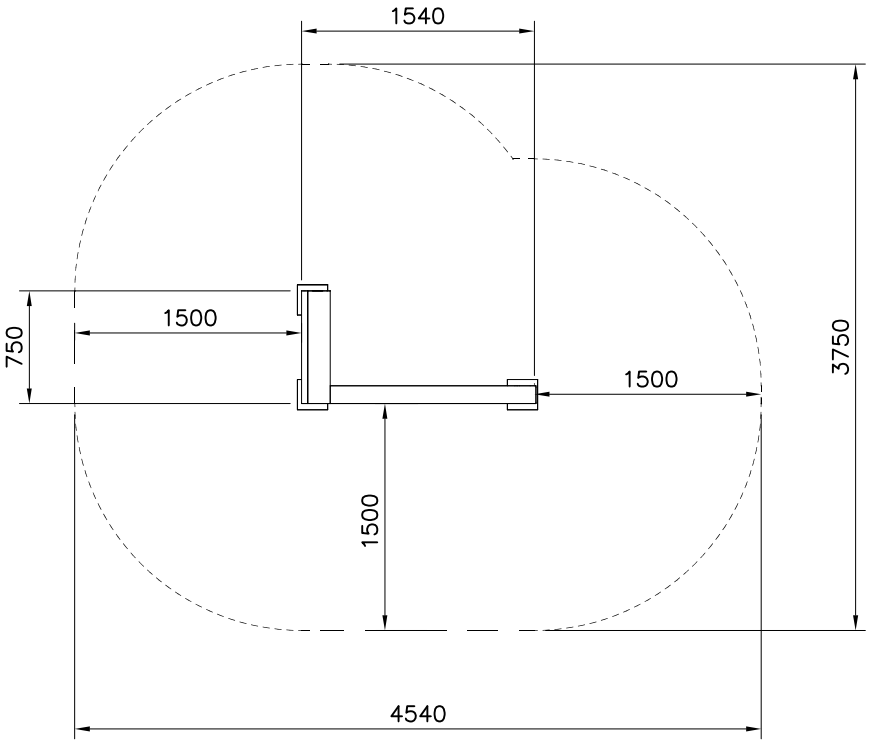

Copyright Lappset Group Ltd

LAPPSET®

081721M

FLORA

DATE: 10.9.2019

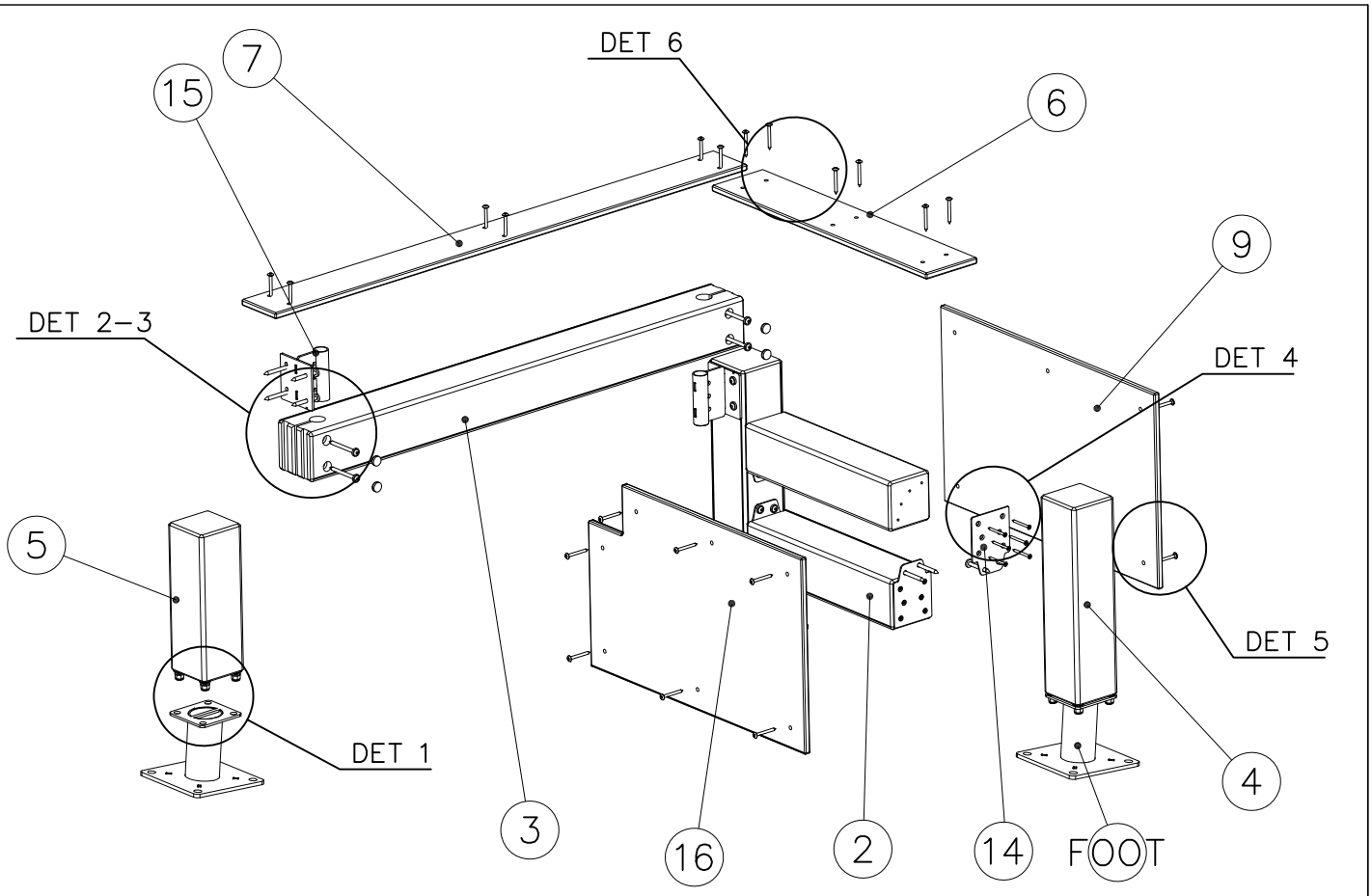

Copyright 1998 Lappset Group Ltd

LAPPSET®

081721M

DATE: 10.9.2019

DET 1

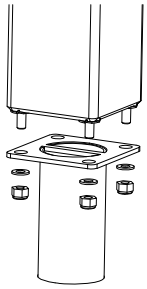

DET 2

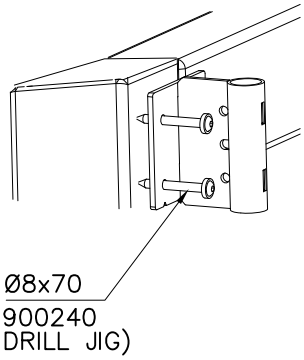

DET 3

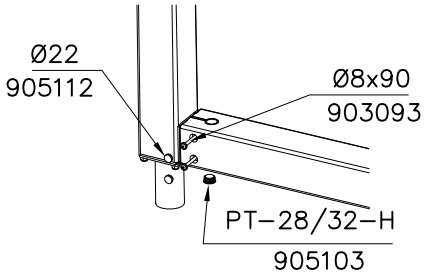

DET 4

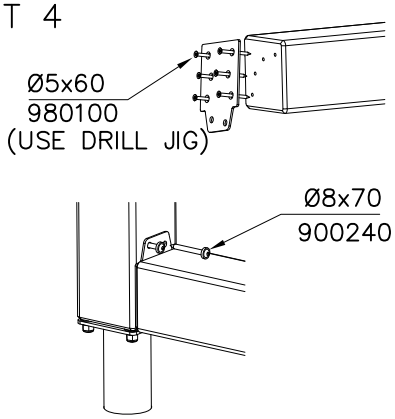

DET 5

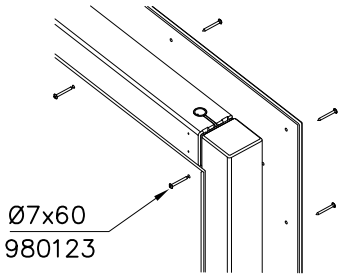

DET 6

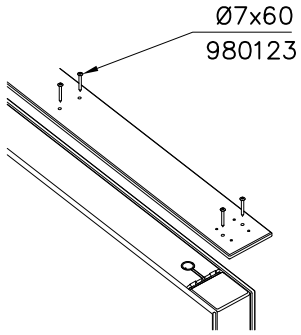

JIG DET A (USE DET 2–4)

NOTE:
Use drill jig 708857
to predrill Ø5↧50
holes for 910266
and 908698

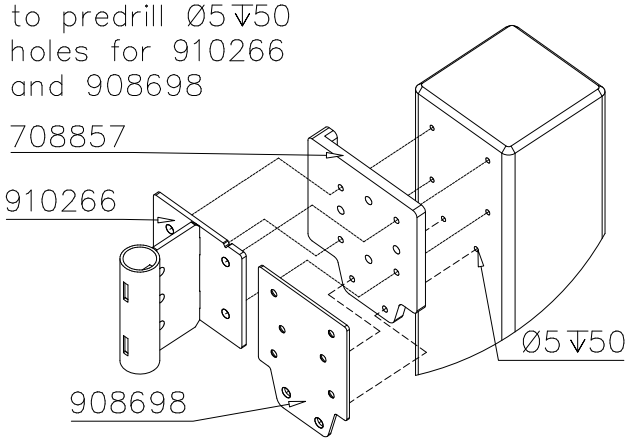

Copyright Lappset Group Ltd

LAPPSET® 081722M

DATE: 20.4.2020

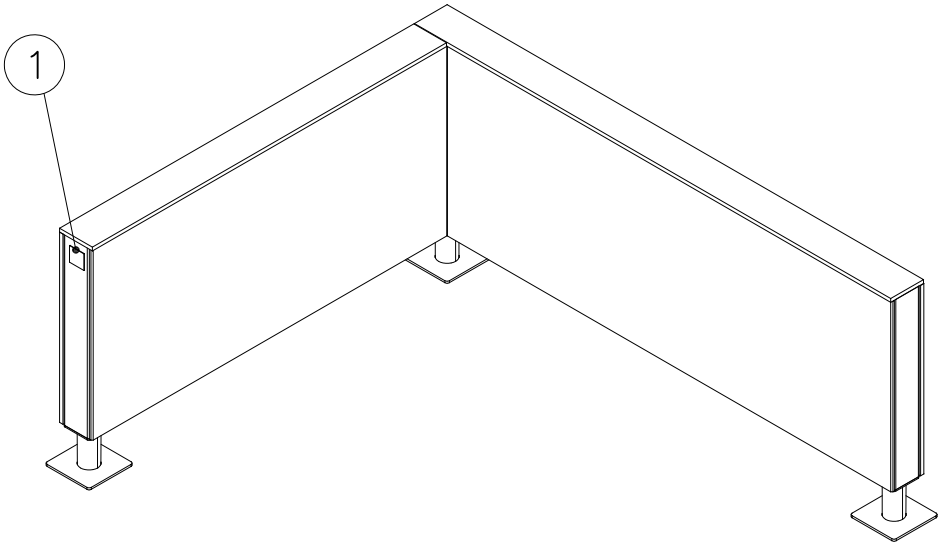

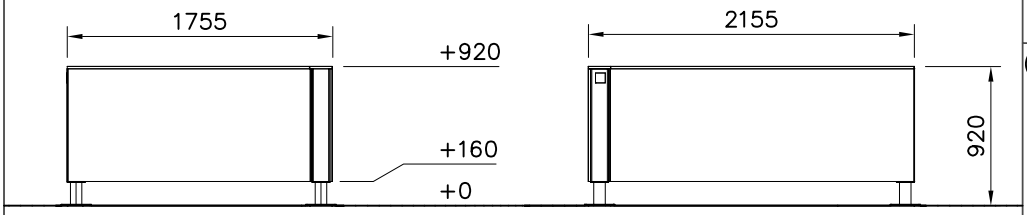

INSTALLATION OF A SECOND HAND

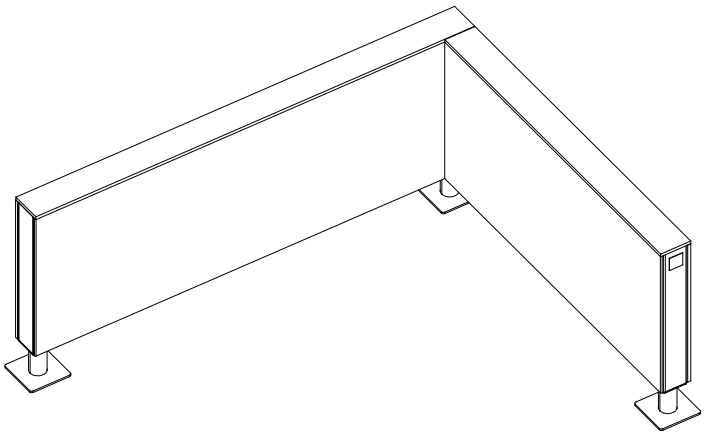

① 702286	PCS 1	65x65	② 707213	PCS 2	118x118x1490			
③ 707517	PCS 2	118x118x1892	④ 708137	PCS 3	118x118x745			
⑤ 708715	PCS 1	15x745x2140	⑥ 708716	PCS 1	15x745x1753			
⑦ 708737	PCS 1	15x148x1601	⑧ 708738	PCS 1	15x148x2153			
⑨ 708857 JIG	PCS 1	20x133x149	⑩ 911309 COLOR	PCS 1	12x745x2015			
⑪ 911311 MURAL	PCS 1	12x745x1610	⑫ 900240	PCS 32	Ø8x70			
⑬ 903093	PCS 16	Ø8x90	⑭ 905103	PCS 8	PT-28/32-H	⑮ 905112	PCS 16	Ø22
⑯ 910266	PCS 8	90x108x118	⑰ 980123	PCS 56	Ø7x60	⑱ 980114	PCS 4	Ø4x20

Copyright Lappset Group Ltd

LAPPSET®

081722M

DATE: 20.4.2020

FOOT OPTIONS

709261+		709262+	
◯ 910330	PCS	◯ 910567	PCS
SURFACE	3	CONCRETE	3
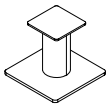			
152x200x200		117x117x715	

– – – – Falling Space 18.8 m2

Max Falling Height 920 mm

1:50

0 2

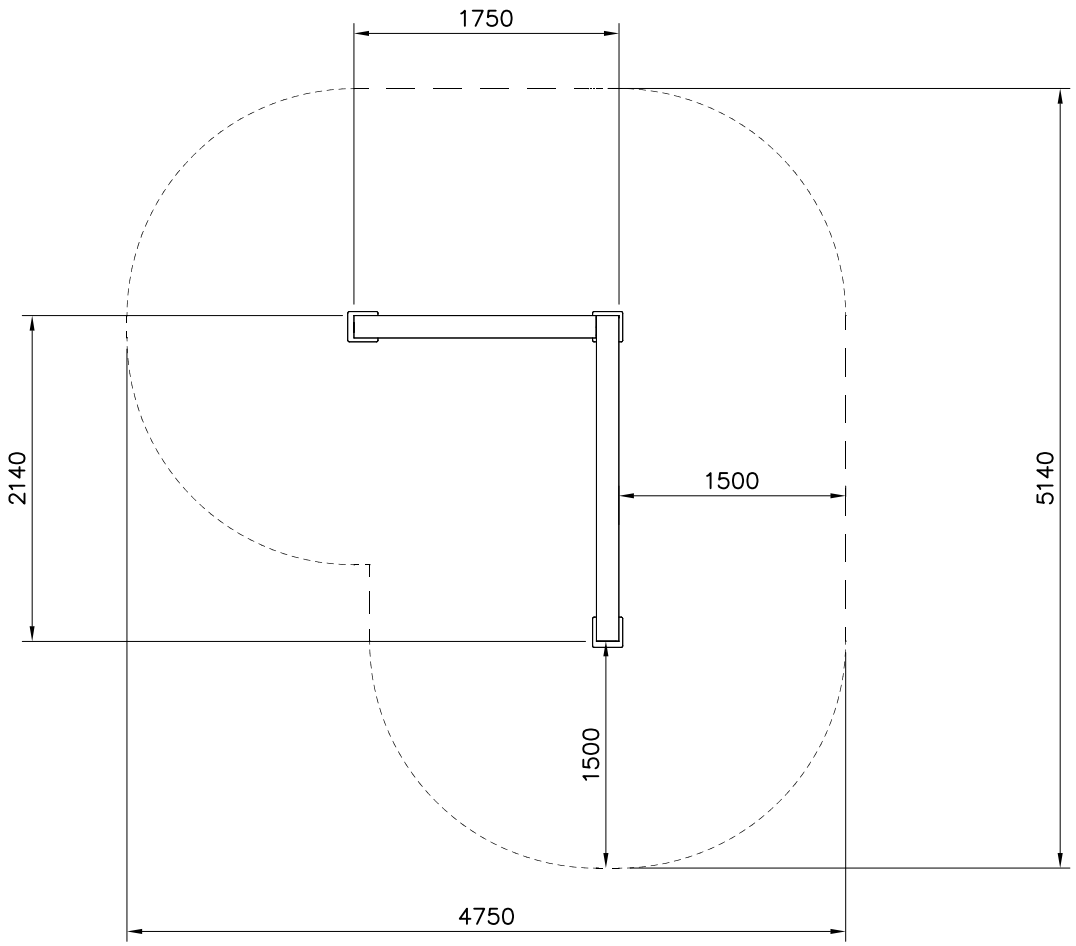

Copyright Lappset Group Ltd

LAPPSET®

081722M

DATE: 20.4.2020

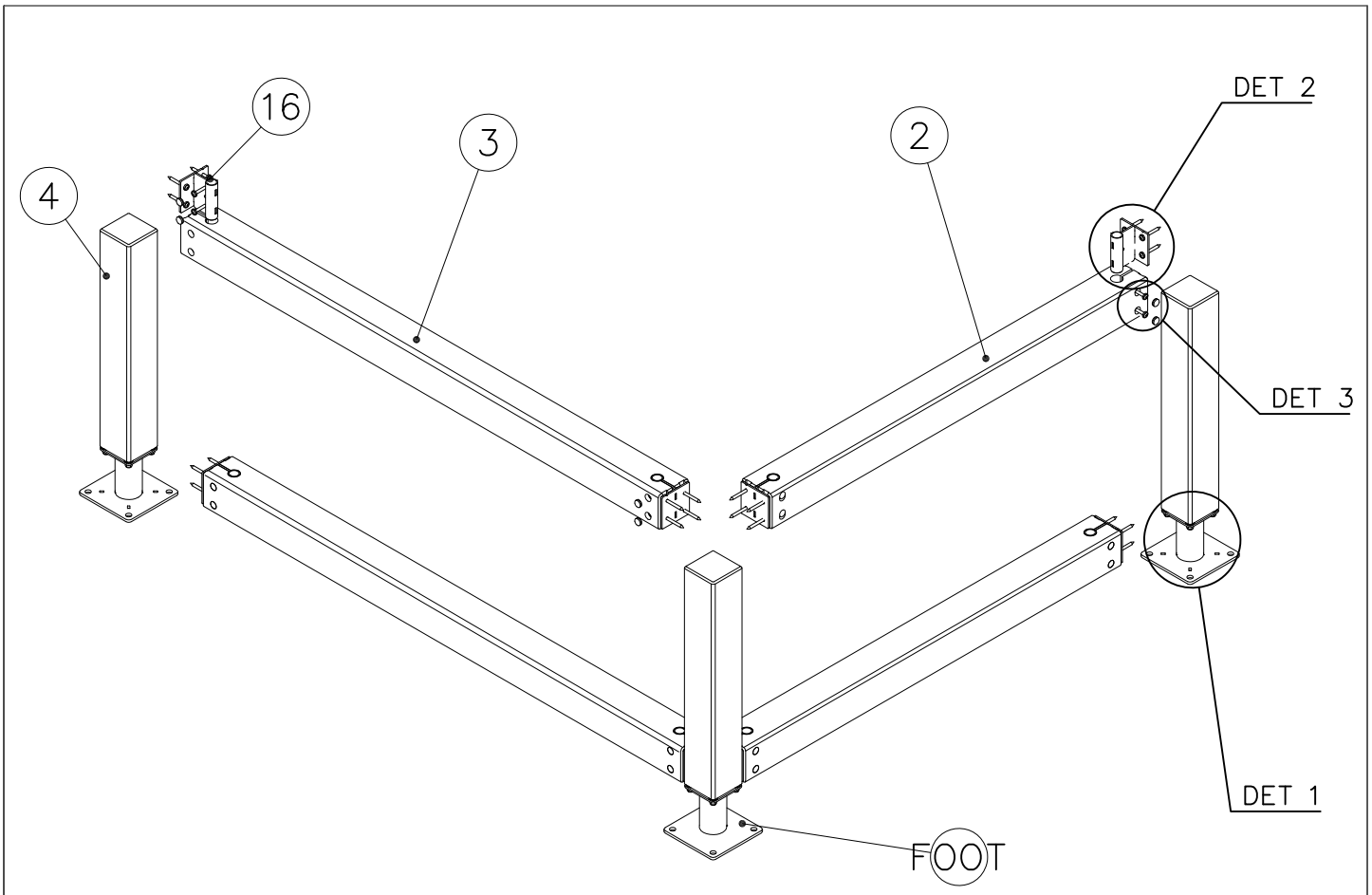

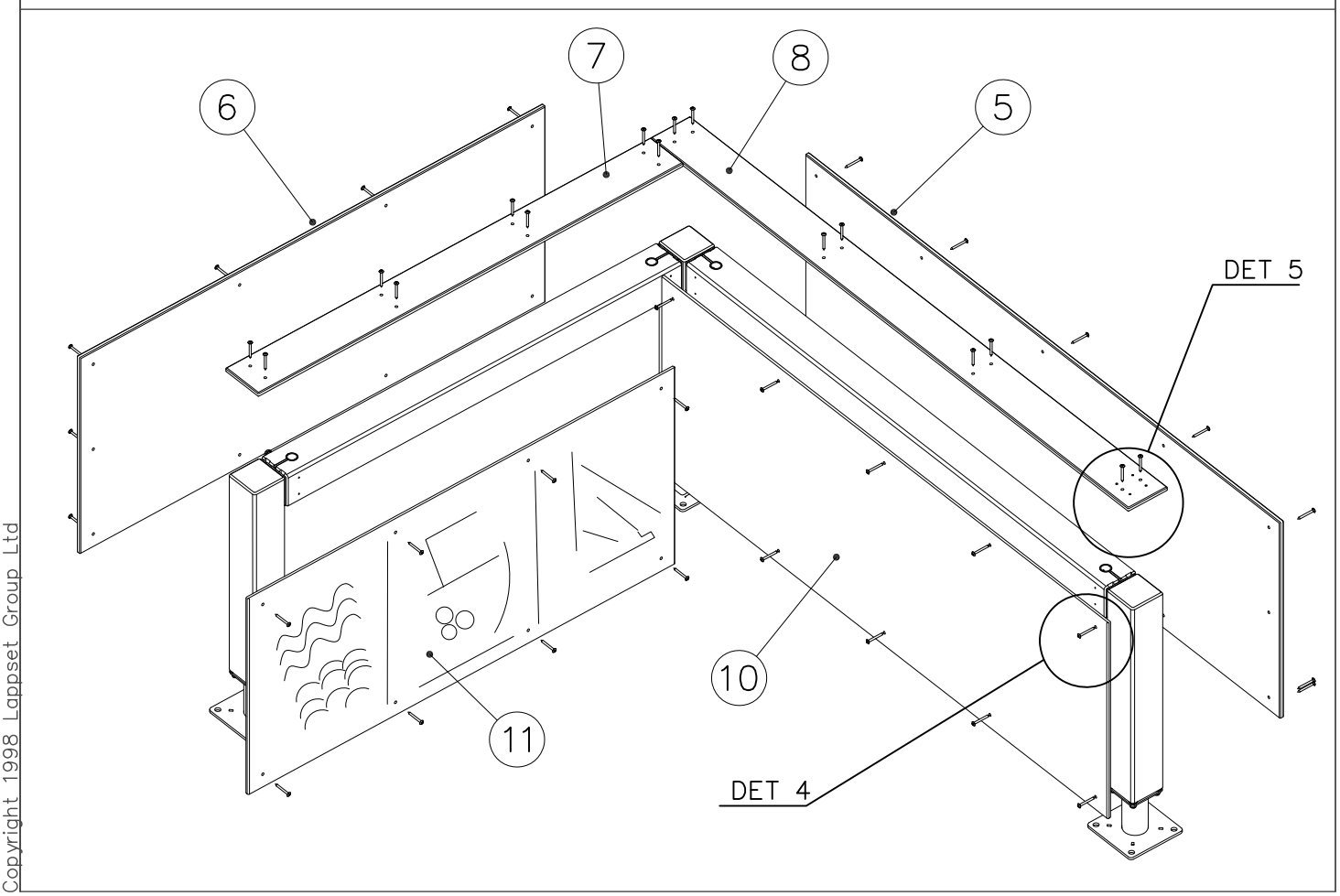

Copyright 1998 Lappset Group Ltd

LAPPSET®

081722M

DATE: 20.4.2020

DET 1

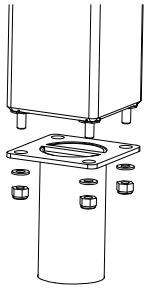

DET 2

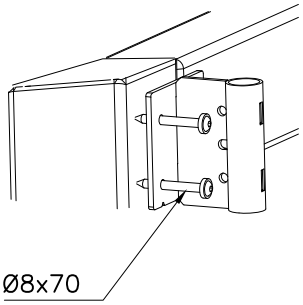

DET 3

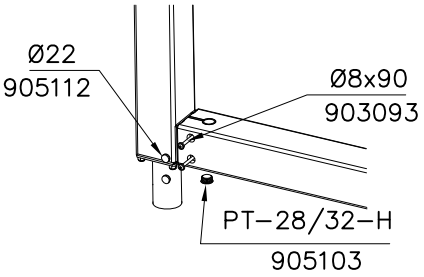

DET 4

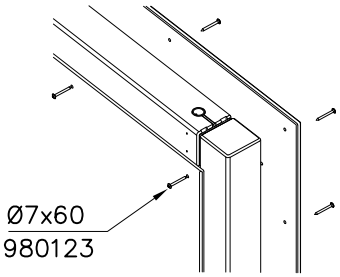

DET 5

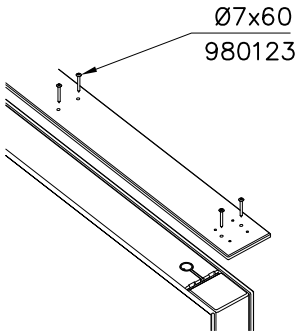

JIG DET A (USE DET 2)

NOTE:
Use drill jig 708857
to predrill Ø5↧50
holes for 910266

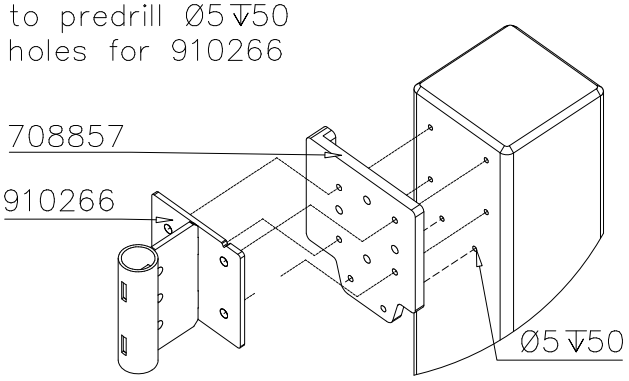

Copyright Lappset Group Ltd

LAPPSET®

081730M

DATE: 22.8.2019

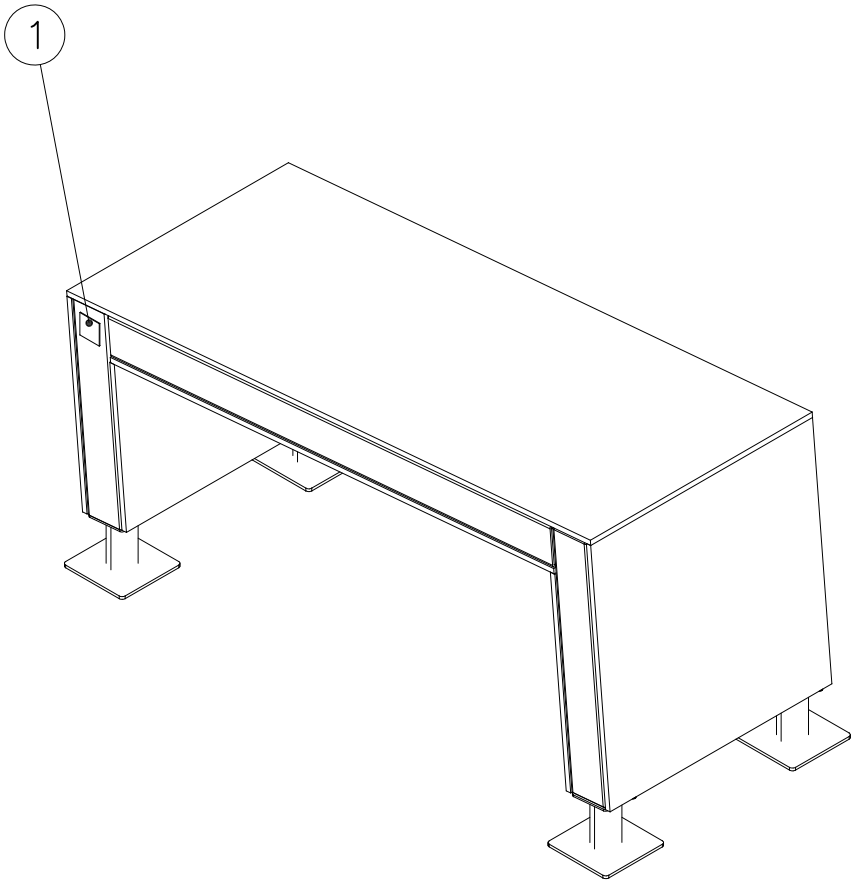

		PCS			PCS
① 702286	65x65	1	② 707210	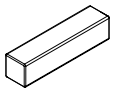 118x118x503	4
③ 707213	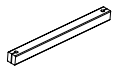 118x118x1490	2	④ 708127	118x118x603	2
⑤ 708137	118x118x745	2	⑥ 708721	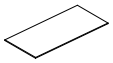 15x745x1766	1
⑦ 708725	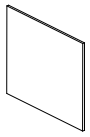 15x603x745	1	⑧ 708726	15x745x745	1
⑨ 708834	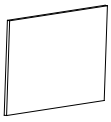 15x745x470	1	⑩ 708835	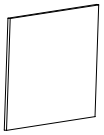 15x745x612	1
⑪ 708857 JIG	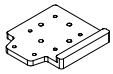 20x133x149	1	⑫ 709204	15x745x1495	1
⑬ 900240	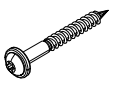 Ø8x70	32	⑭ 903093	Ø8x90	8
⑮ 905103	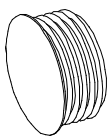 PT–28/32–H	8	⑯ 905112	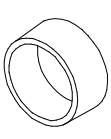 Ø22	8

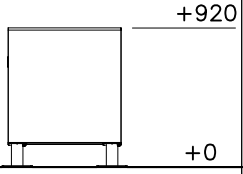

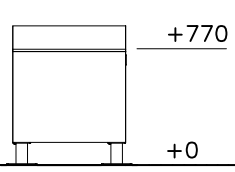

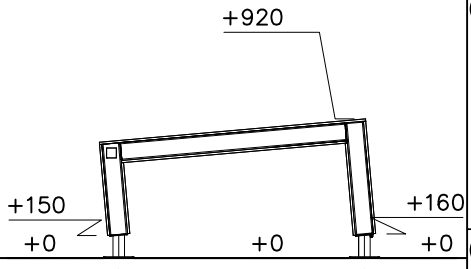

Copyright Lappset Group Ltd

LAPPSET®

081730M

DATE: 22.8.2019

⑰ 908698	PCS	⑱ 910266	PCS	⑲ 980114	PCS	⑳ 980100	PCS	㉑ 980123	PCS		PCS		PCS
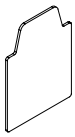	8	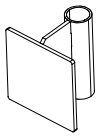	4		4		48		38				
3x114x108		90x108x118		Ø4x20		Ø5x60		Ø7x60					

	PCS		PCS		PCS

FOOT OPTIONS

709261+ 709262+

○ 910267 SURFACE	PCS	○ 910567 CONCRETE	PCS
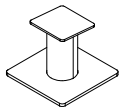	4		4
152x200x200		117x117x715	

– – – – Falling Space 16.1 m2

Max Falling Height 920 mm

1:50

0 2

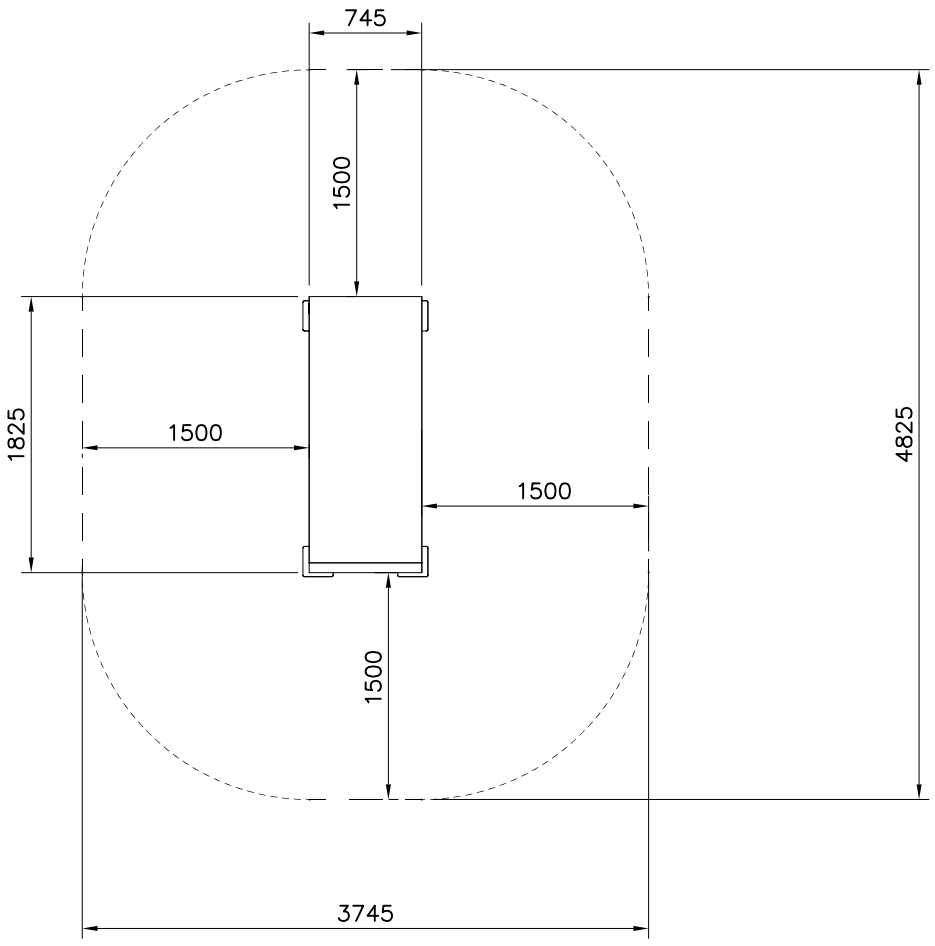

Copyright Lappset Group Ltd

LAPPSET®

081730M

FLORA

DATE: 22.8.2019

DET 1

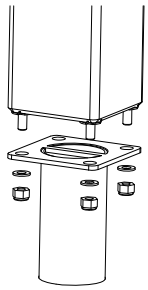

DET 2

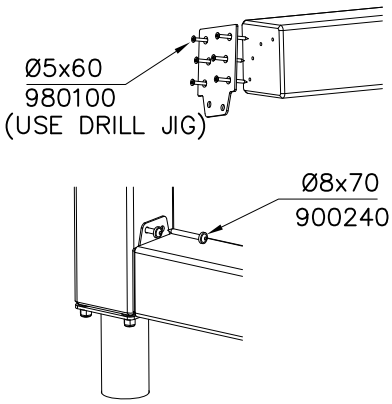

DET 3

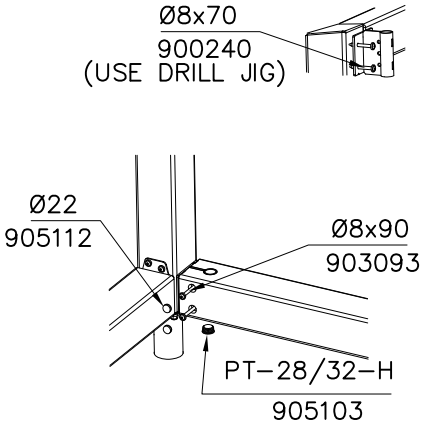

DET 4

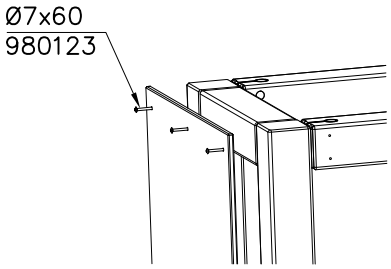

DET 5

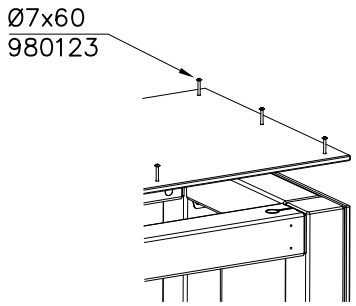

DET 6

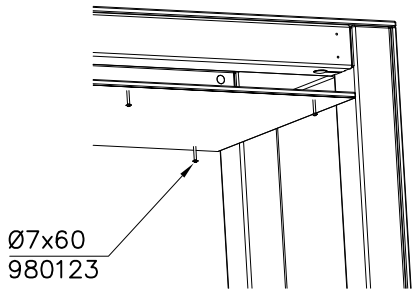

DET 7

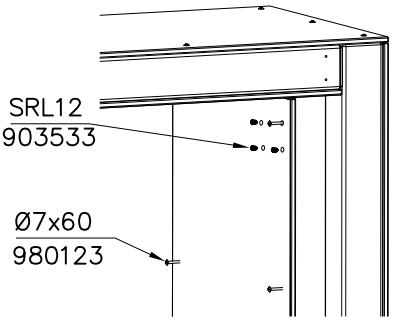

Copyright 1998 Lappset Group Ltd

LAPPSET®

081730M

DATE: 22.8.2019

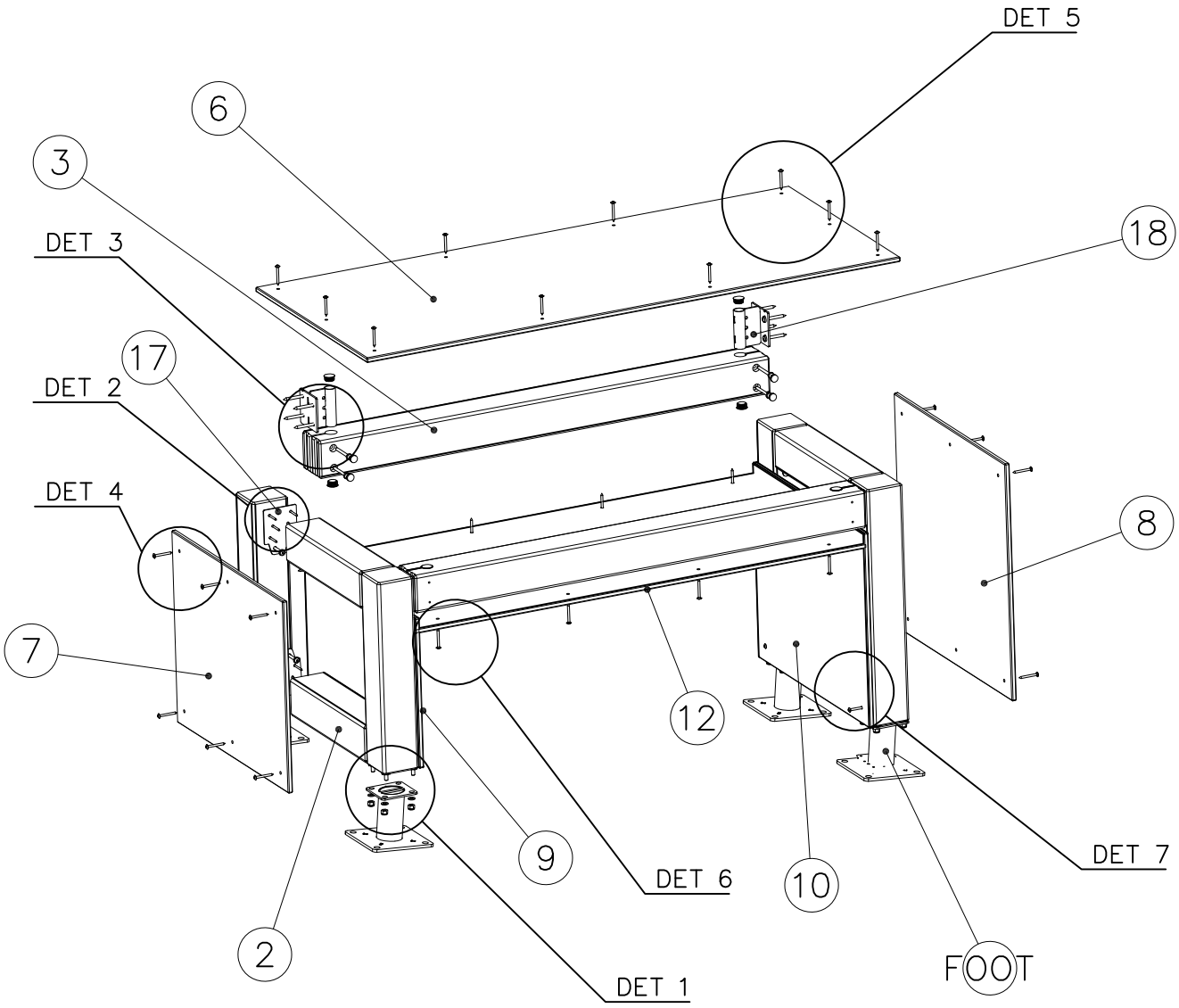

JIG DET A (USE DET 2–3)

NOTE:
Use drill jig 708857
to predrill Ø5↧50
holes for 910266
and 908698

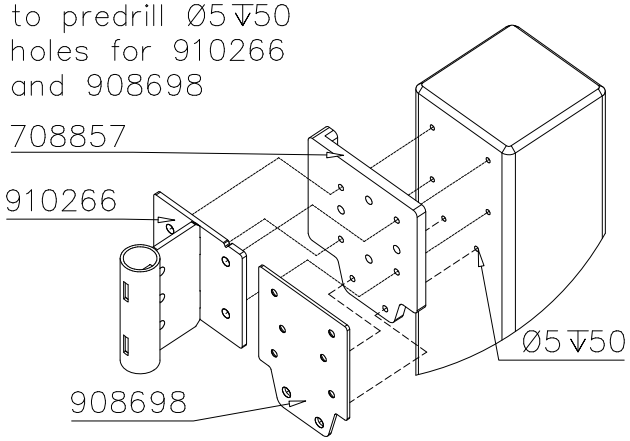

Copyright Lappset Group Ltd

LAPPSET®

081738M

DATE: 8.2.2021

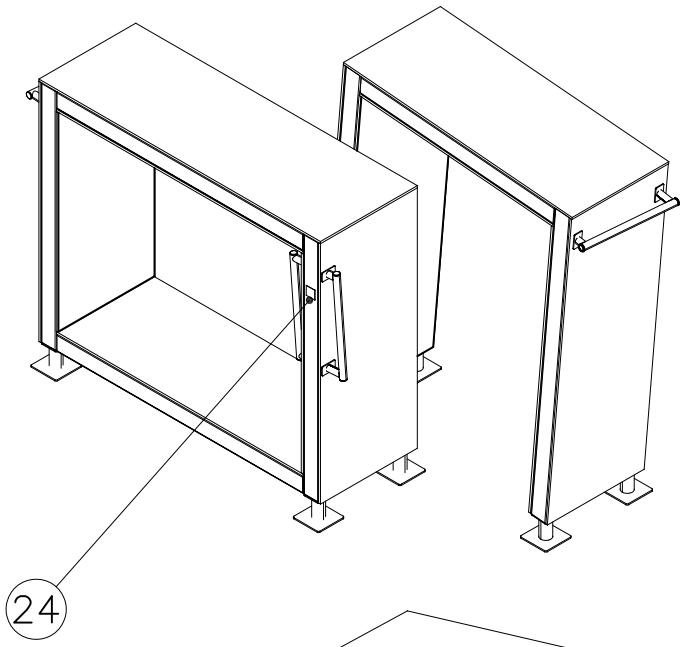

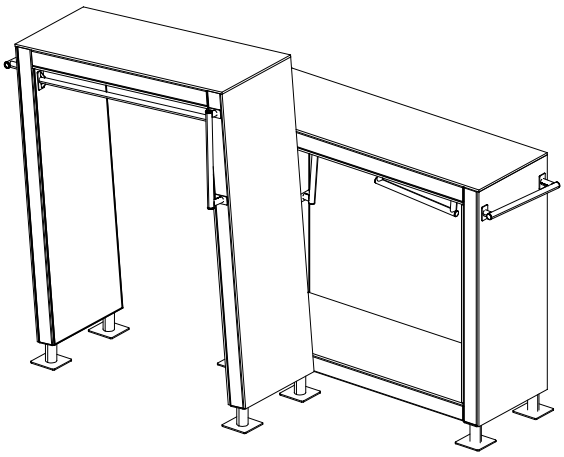

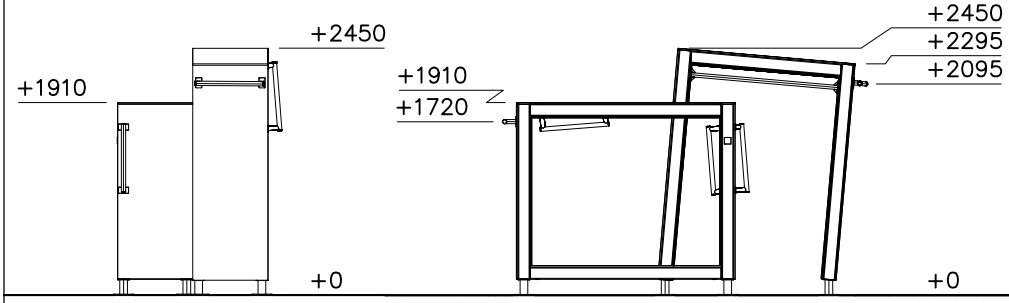

① 707210	PCS 8	118x118x503	② 707213	PCS 2	118x118x1490
③ 707517	PCS 4	118x118x1892	④ 708346	PCS 4	118x118x1736
⑤ 708522	PCS 2	118x118x2139	⑥ 708688	PCS 2	118x118x2279
⑦ 708721	PCS 1	15x745x1766	⑧ 708722	PCS 1	15x745x2280
⑨ 708836	PCS 2	15x745x1736	⑩ 708837	PCS 1	15x745x2168
⑪ 708839	PCS 1	15x745x1897	⑫ 708857	PCS 1	20x133x149
⑬ 900240	PCS 112	Ø8x70	⑭ 903093	PCS 24	Ø8x90
⑮ 905103	PCS 16	PT-28/32-H	⑯ 905112	PCS 24	Ø22

Copyright Lappset Group Ltd

FOOT OPTIONS

709261+		709261+		709262+	
○ 910267	PCS	○ 910330	PCS	○ 910567	PCS
SURFACE	4	SURFACE	4	CONCRETE	8
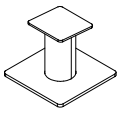		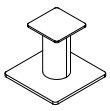			
152x200x200		152x200x200		117x117x715	

EN Impact Attenuating Surface (IAS) 32.7 m2

Falling Space 32.7 m2

Max Falling Height 2450 mm

1:50

0 2

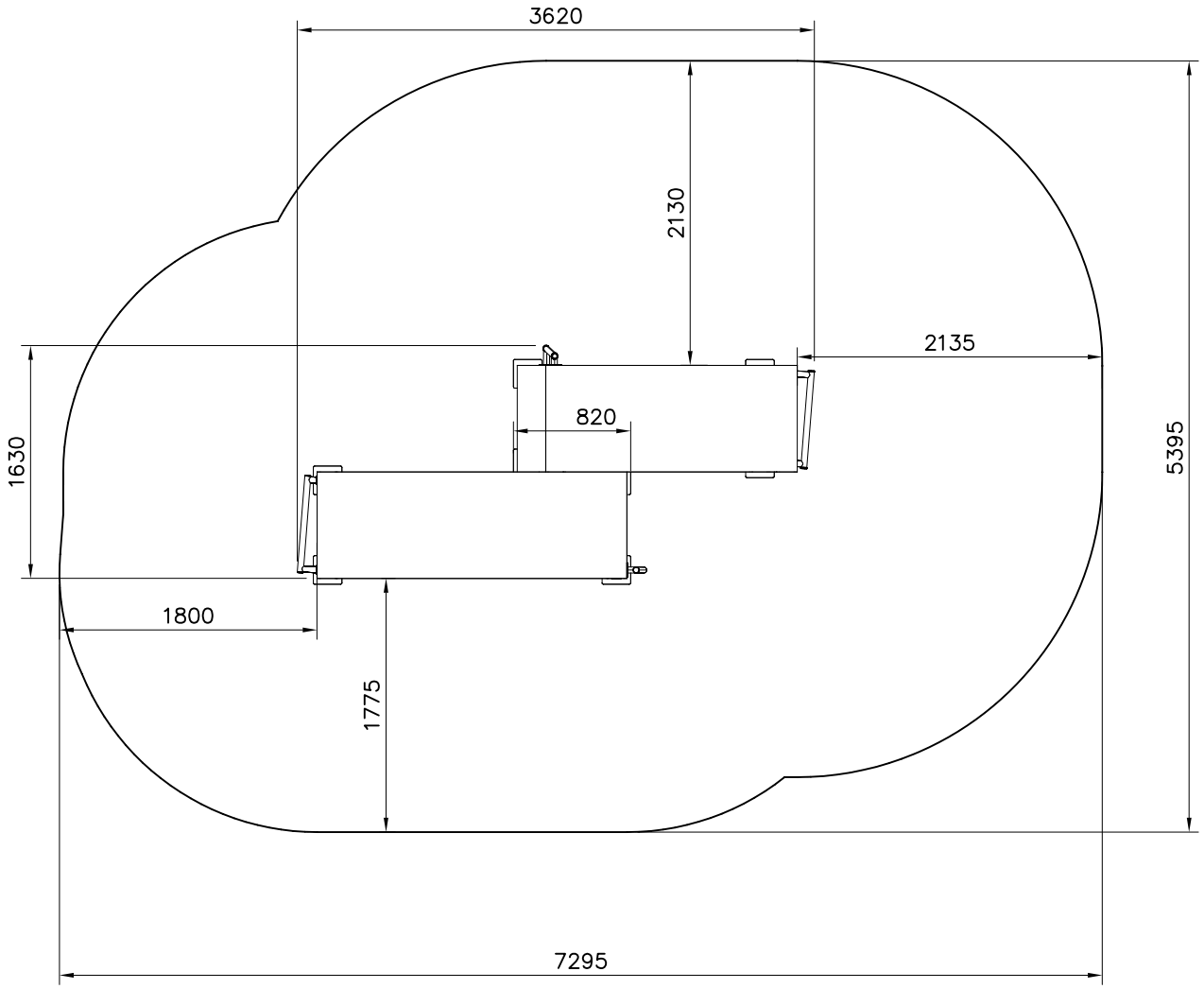

Copyright Lappset Group Ltd

LAPPSET® 081738M

DATE: 8.2.2021

		PCS
⑰ 908371	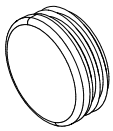	12
	42–38/40	
⑱ 908698	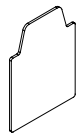	16
	3x114x108	
㉝ 980114		4
	Ø4x20	
⑲ 910056	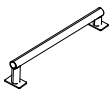	6
	140x690	
⑳ 910266	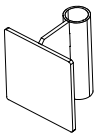	12
	90x108x118	
㉞ 905086		3
	Ø44/13.5x3.9	
㉑ 910328		1
	L 1466	21
㉒ 980100		96
	Ø5x60	
㉟ 909248		1
	M12	
㉓ 980123		129
	Ø7x60	
㉔ 702286		1
	65x65	
㊱ 909132		1
	M12x280	
㉕ 911288 COLOR	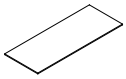	2
	15x745x1465	
㉖ 911289 COLOR	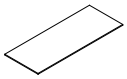	1
	15x745x1897	
㉗ 909225		1
	Ø12x180	
㉘ 911297 MURAL		1
	12x745x2140	
㉙ 911293 COLOR	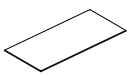	1
	15x745x2145	
㉚ 911295 COLOR	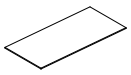	1
	15x745x2004	
㉛ 911301 COLOR	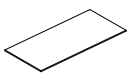	1
	15x745x1495	
㉜ 709261	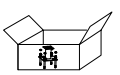	8

DET 1

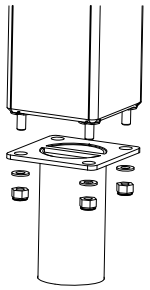

DET 2

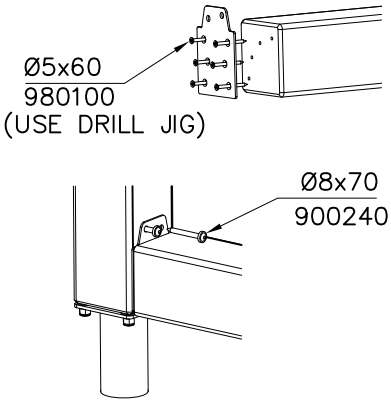

DET 3

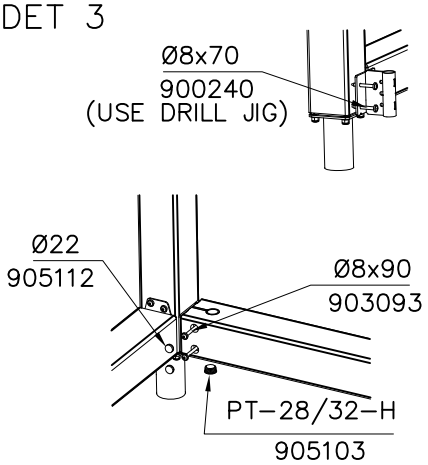

DET 4

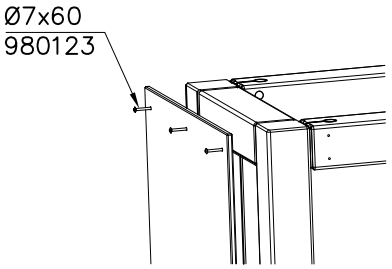

Copyright 1998 Lappset Group Ltd

LAPPSET®

081738M

DATE: 8.2.2021

DET 5

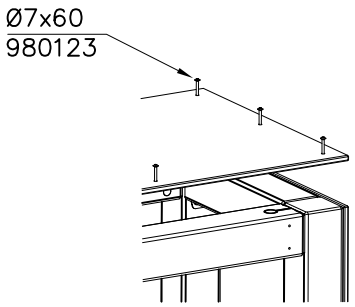

DET 6

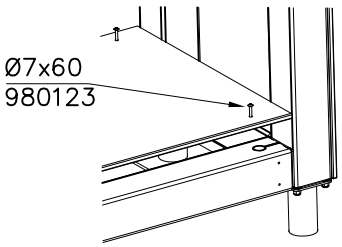

DET 7

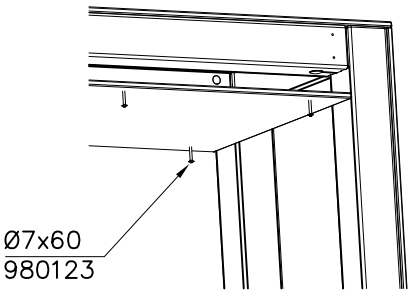

DET 8

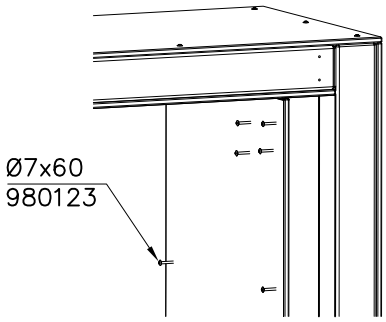

DET 9

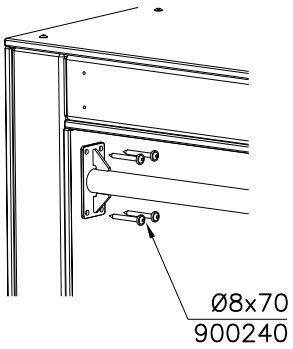

DET 10

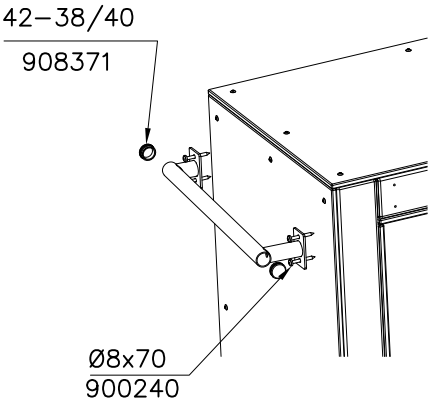

DET 11 DRILL PREHOLES BEFORE INSTALLING HANDLES

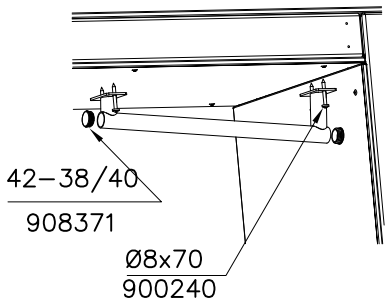

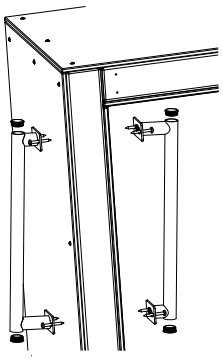

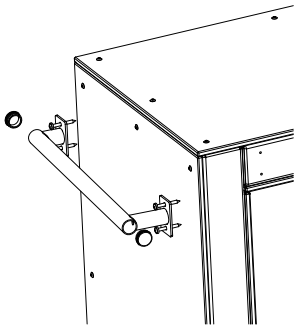

DET 12 DRILL PREHOLES BEFORE INSTALLING HANDLES

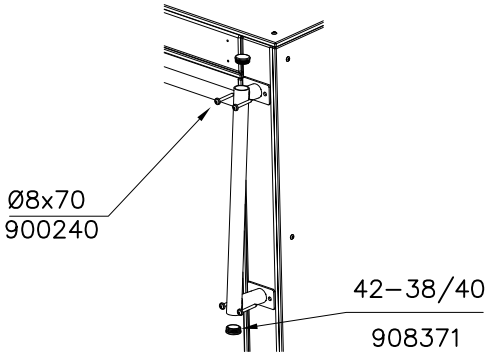

Copyright 1998 Lappset Group Ltd

LAPPSET® 081738M

DATE: 8.2.2021

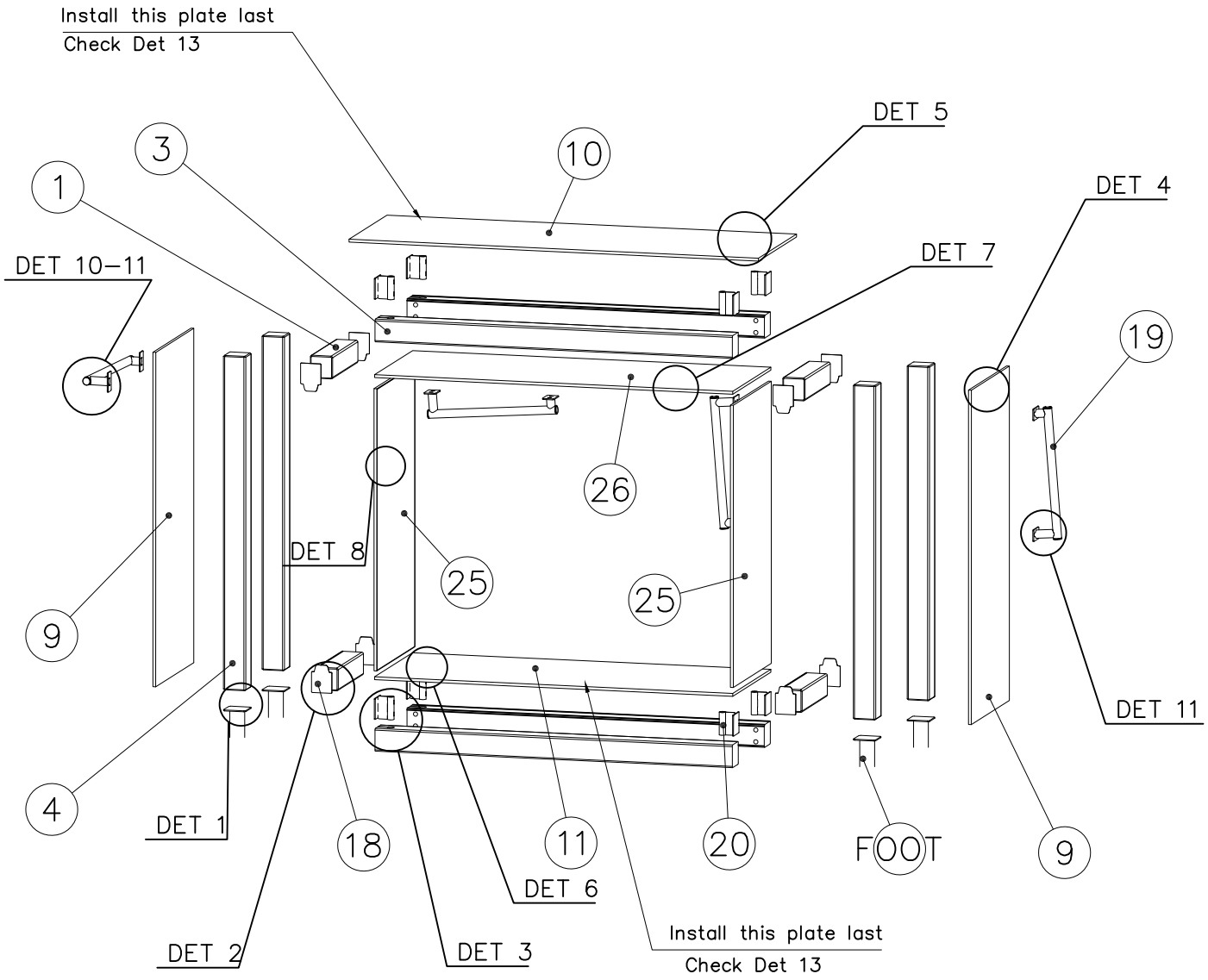

JIG DET A (USE DET 2–3)

NOTE:
Use drill jig 708857
to predrill Ø5↧50
holes for 910266
and 908698

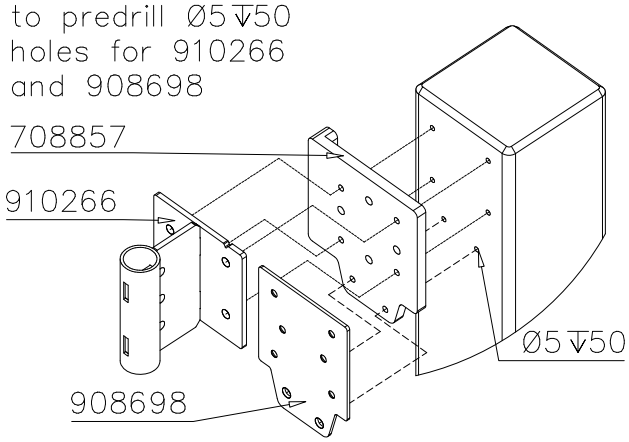

JIG DET B (USE DET 10–11)

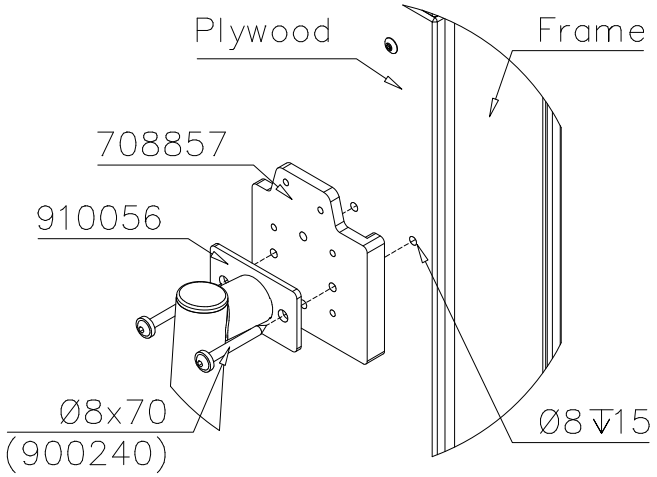

Copyright Lappset Group Ltd

LAPPSET®

081738M

DATE: 8.2.2021

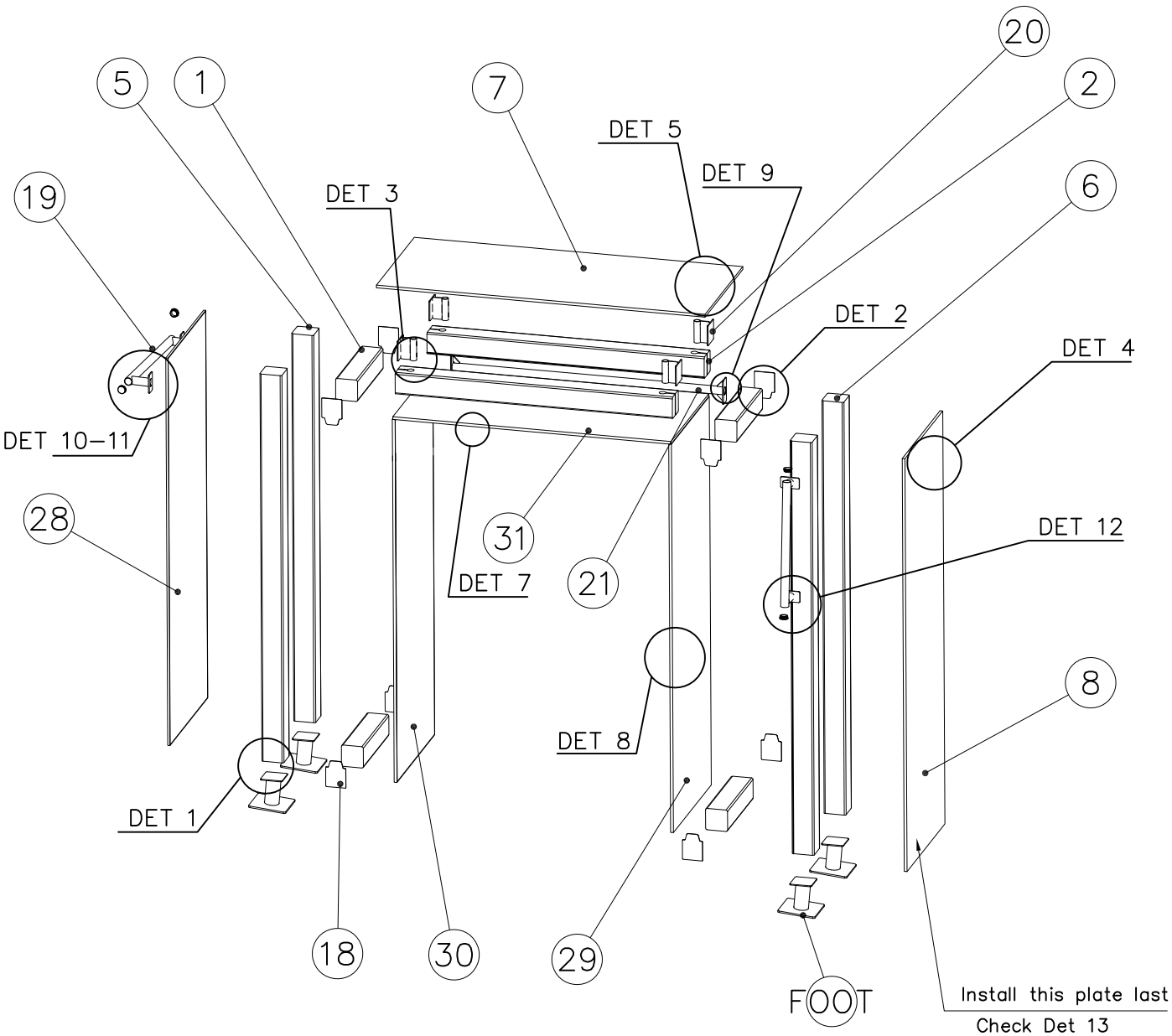

DET 13

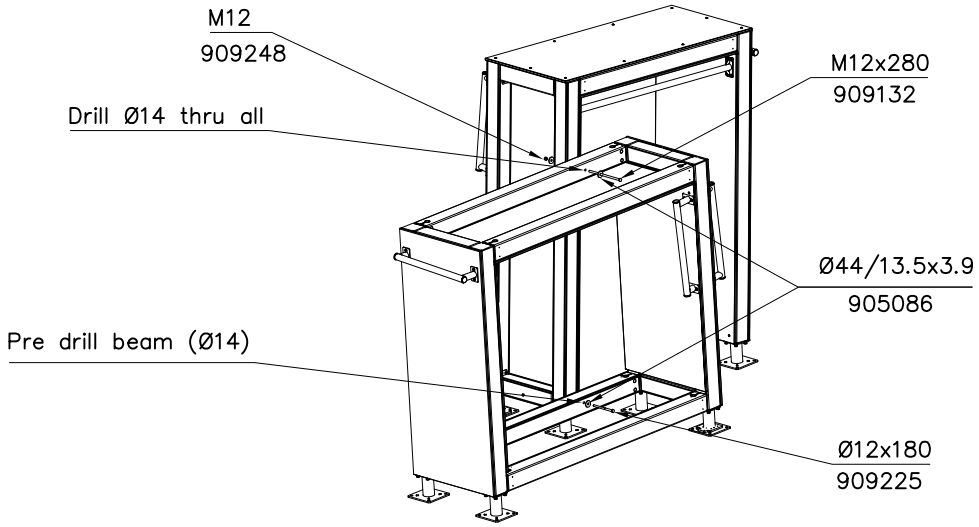

Copyright Lappset Group Ltd

LAPPSET®

IAS EN 16899

REF:
DATE: **24.9.2020**

4x

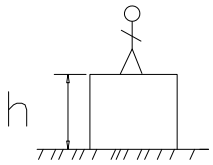

h < 1600

Totally hard surfaces or materials with very limited impact attenuating properties.

Case by case risk assessment is needed including e.g. evalution whether there is forced movement, what is the intended exercise and where will the product be installed.

Materials with significant impact attenuating properties.

Totally hard surfaces.
E.g. concrete or asphalt

Materials with very limited impact attenuating properties.
E.g. wood

fine gravel 0–8 mm

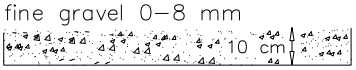

Unsorted sand/ topsoil

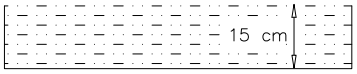

Lawn

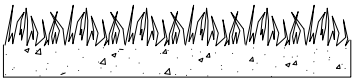

h = 1600-
h < 3000

Loose fill material

E.g.
sand/gravel 0,25...8 mm D60/D10<3,0
Woodchips 5...30 mm
bark 20...80 mm

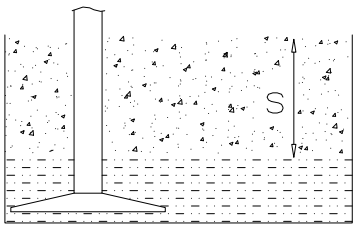

S	h
30 cm	< 3,0 m

Syntethic granulates

S	h
40 mm	~> 1,6...~< 1,8 m
50 mm	~> 1,8...~< 2,25 m
55 mm	~> 2,25...~< 2,4 m
60 mm	~> 2,4...~< 2,55 m
70 mm	~> 2,55...~< 3,0 m

Note. For accurate values, see manufacturer's instructions.

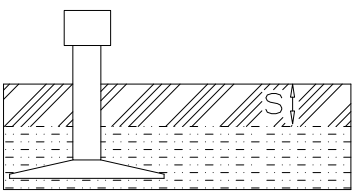

Copyright Lappset Group Ltd