LAPPSET®

DASH PARKOUR

ASENNUSOHJE
MONTERINGSANSVISNING
INSTALLATION INSTRUCTION
AUFBAUANLEITUNG
NOTICE D'INSTALLATION

DATE: 24.2.2021

081786M

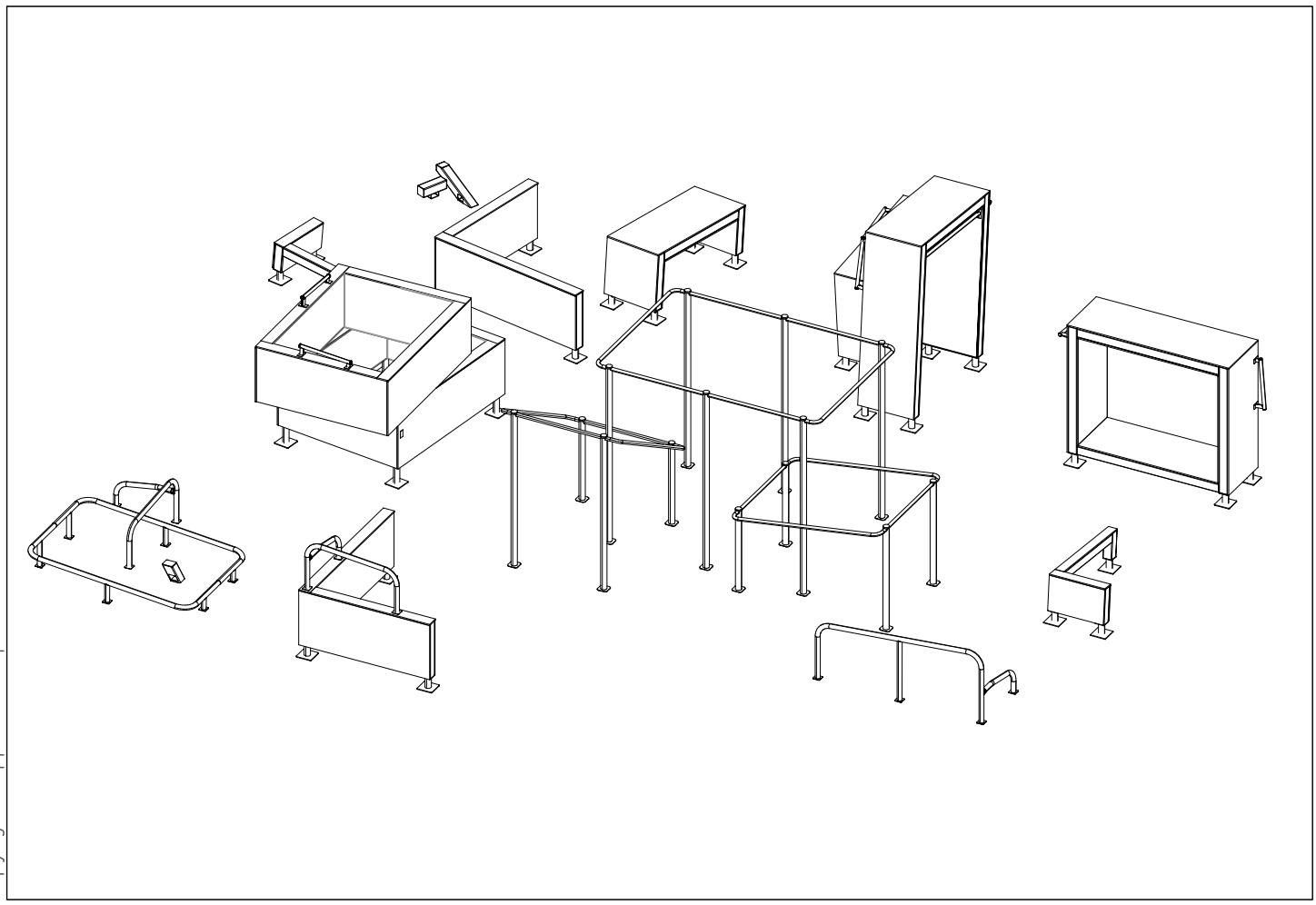

Copyright Lappset Group Ltd

LAPPSET®

DASH PARKOUR

081786M

3

DATE: 24.2.2021

081700M	PCS	081701M	PCS	081711M	PCS	081712M	PCS	081713M	PCS	081720M	PCS
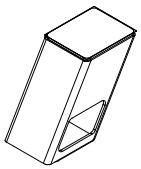	1	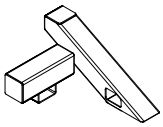	1	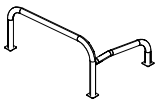	1	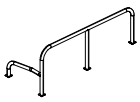	1	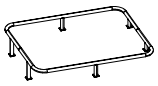	1	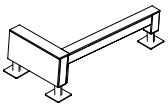	1
081721M	PCS	081722M	PCS	081726M	PCS	081730M	PCS	081733M	PCS	081734M	PCS
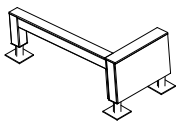	1	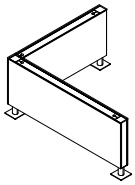	1	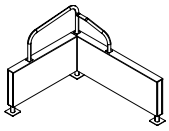	1	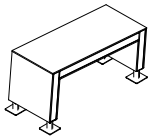	1	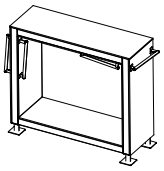	1	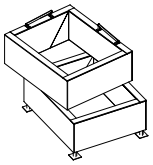	1
081737M	PCS	081751M	PCS		PCS		PCS		PCS		PCS
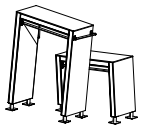	1	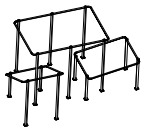	1								
	PCS		PCS		PCS		PCS		PCS		PCS
	PCS		PCS		PCS		PCS		PCS		PCS
	PCS		PCS		PCS		PCS		PCS		PCS
	PCS		PCS		PCS		PCS		PCS		PCS

Copyright Lappset Group Ltd

LAPPSET®

DASH PARKOUR

081786M

DATE: 24.2.2021

4a

1:100

0 5

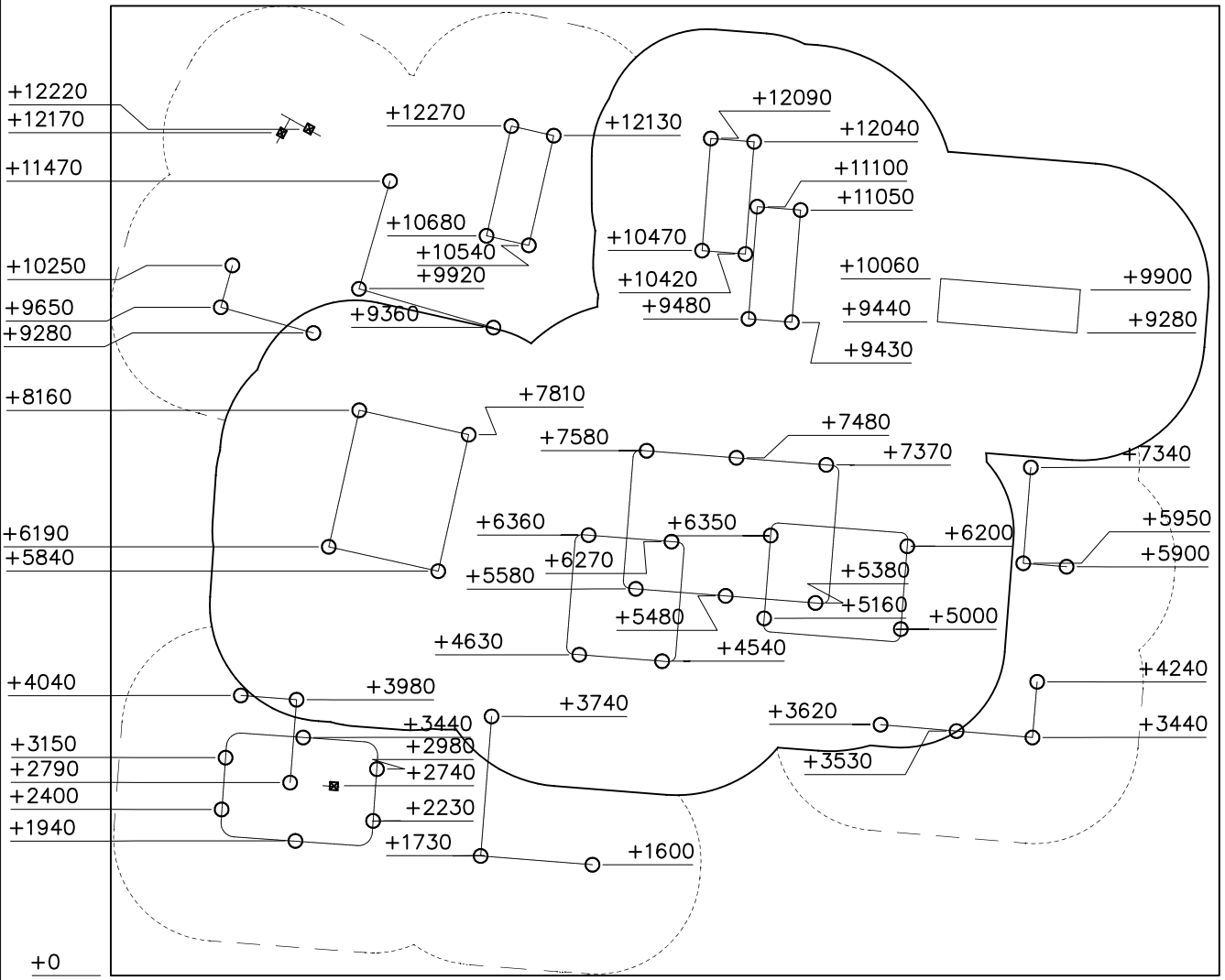

Copyright Lappset Group Ltd

LAPPSET®

DASH PARKOUR

081786M

DATE: 24.2.2021

4b

1:100

0 5

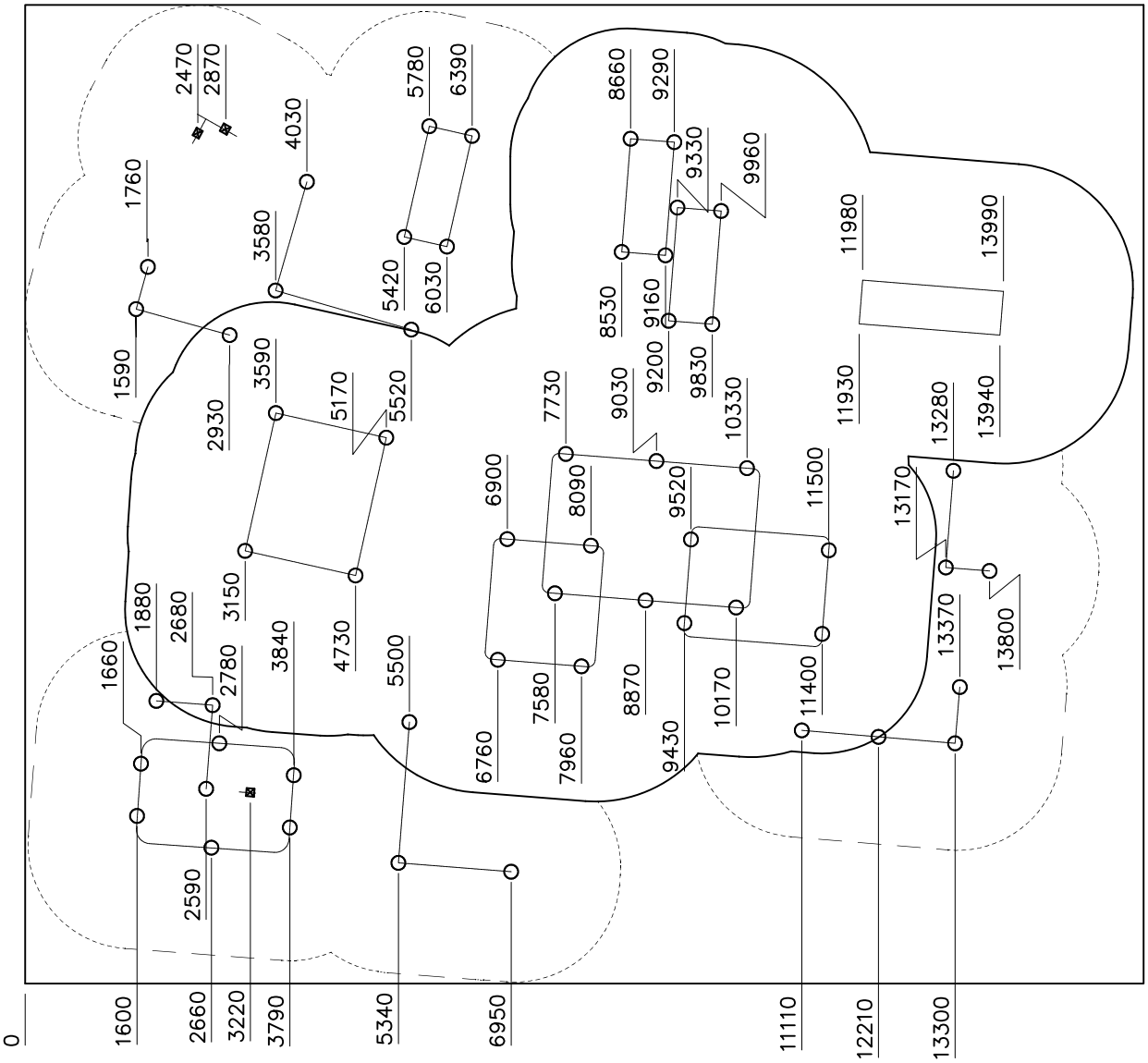

Copyright Lappset Group Ltd

LAPPSET®

DASH PARKOUR

081786M

DATE: 24.2.2021

5

1:125

EN Impact Attenuating Surface (IAS) 102.6 m2
Falling Space 173.7 m2
Max Falling Height 2450 mm

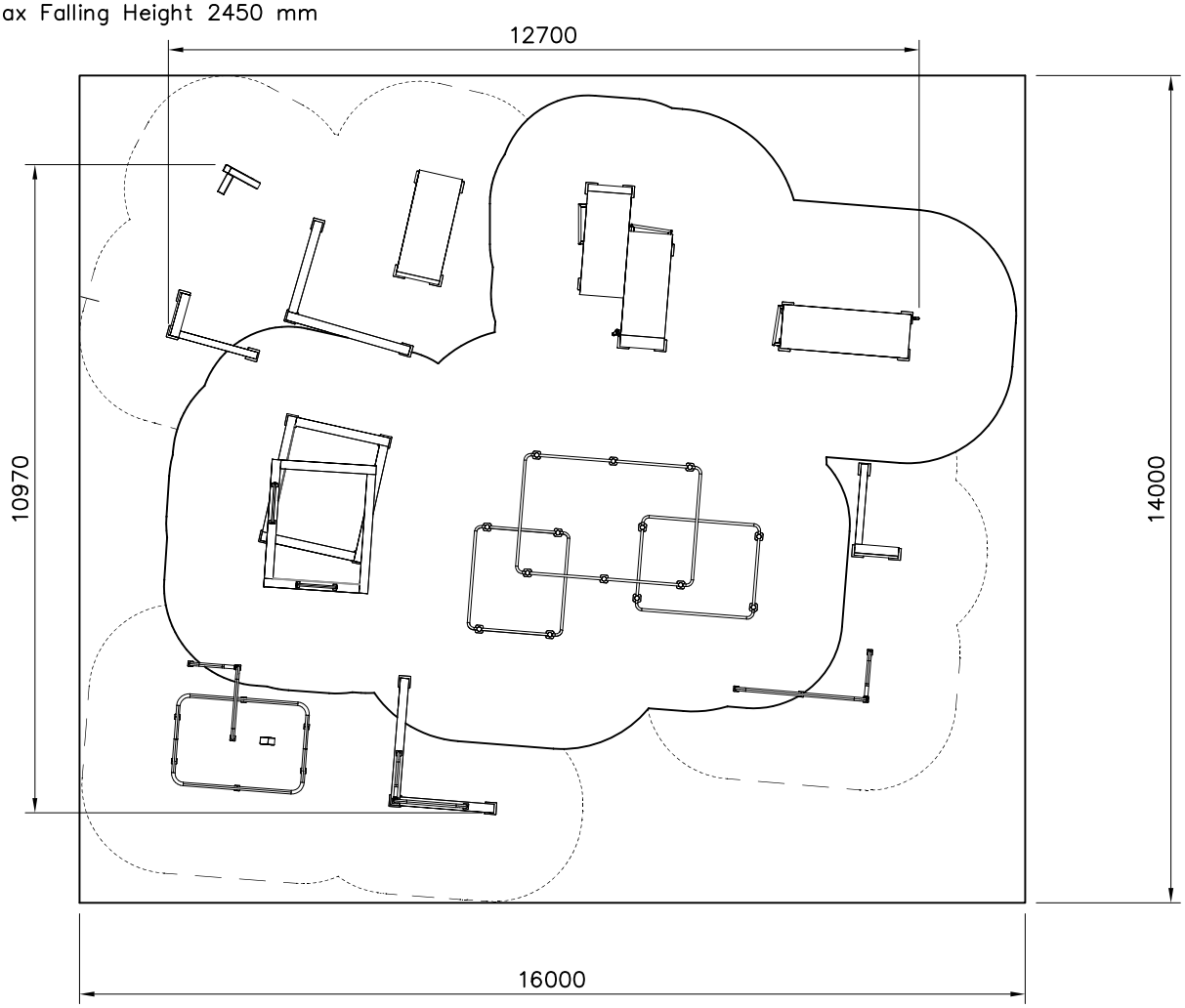

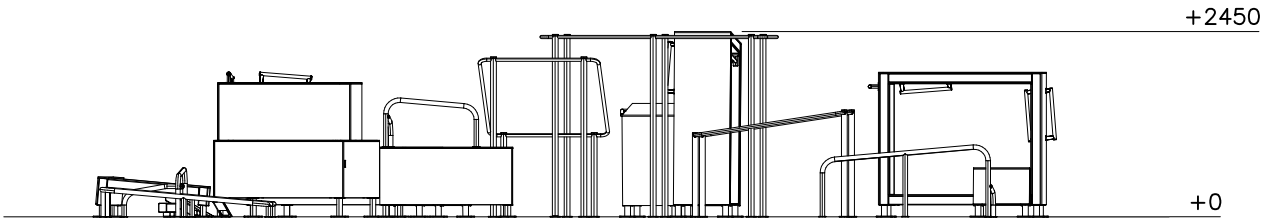

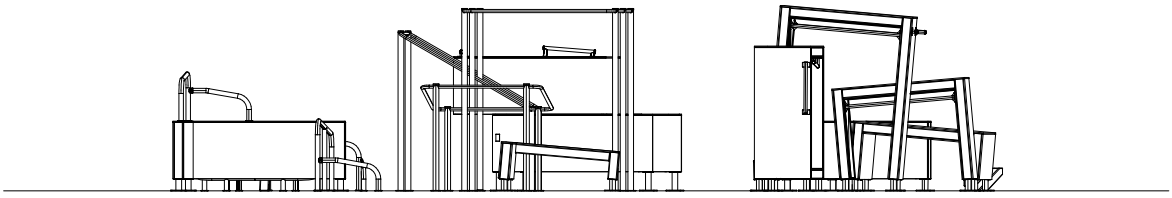

Copyright Lappset Group Ltd

LAPPSET®

DASH PARKOUR

081786M

DATE: 24.2.2021

5b

1:100

0 5

Groudmarks

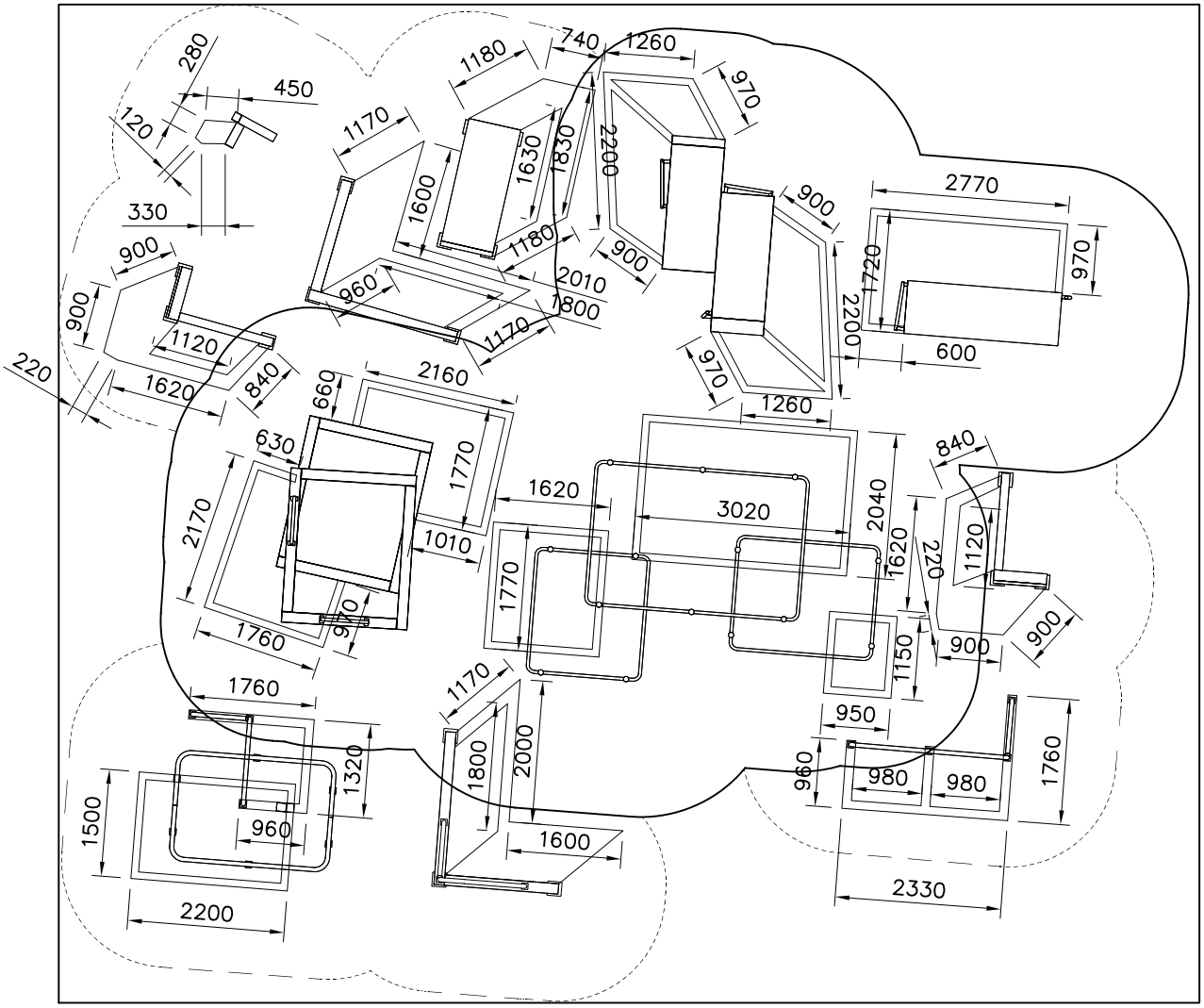

Copyright Lappset Group Ltd

LAPPSET®

081786M

DASH PARKOUR

DATE: 24.2.2021

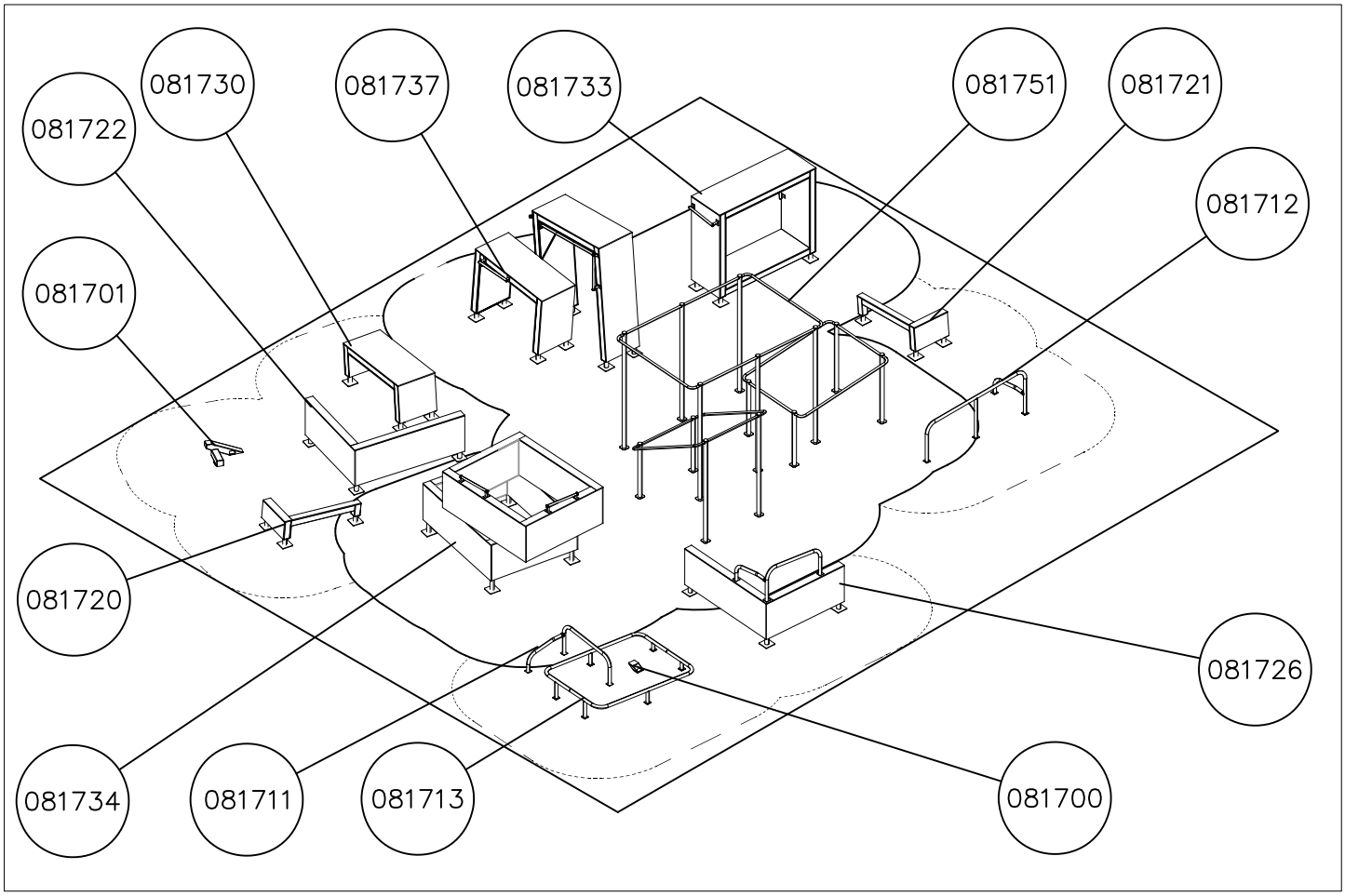

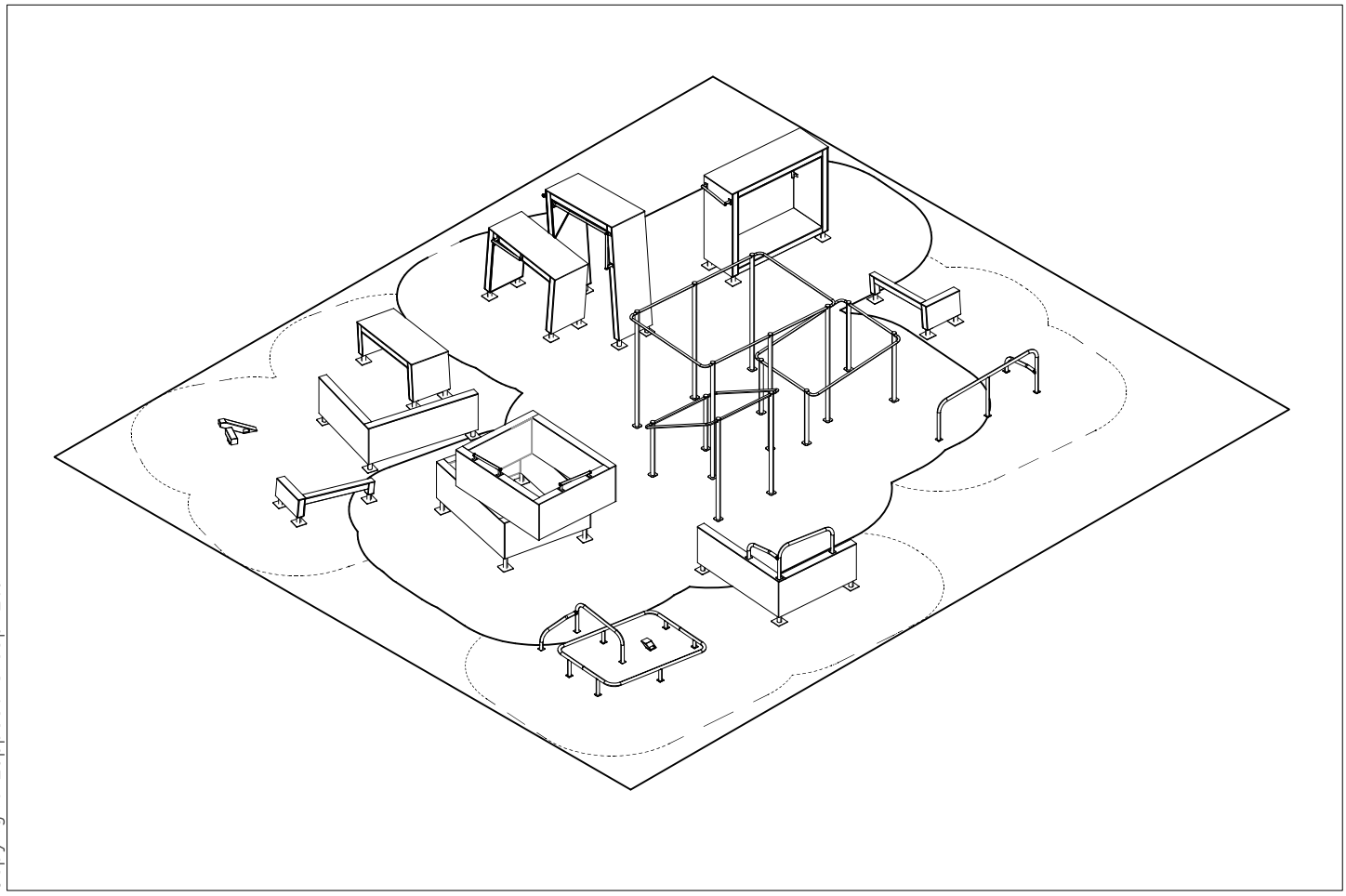

Copyright Lappset Group Ltd

LAPPSET®

081786M

DASH PARKOUR

DATE: 24.2.2021

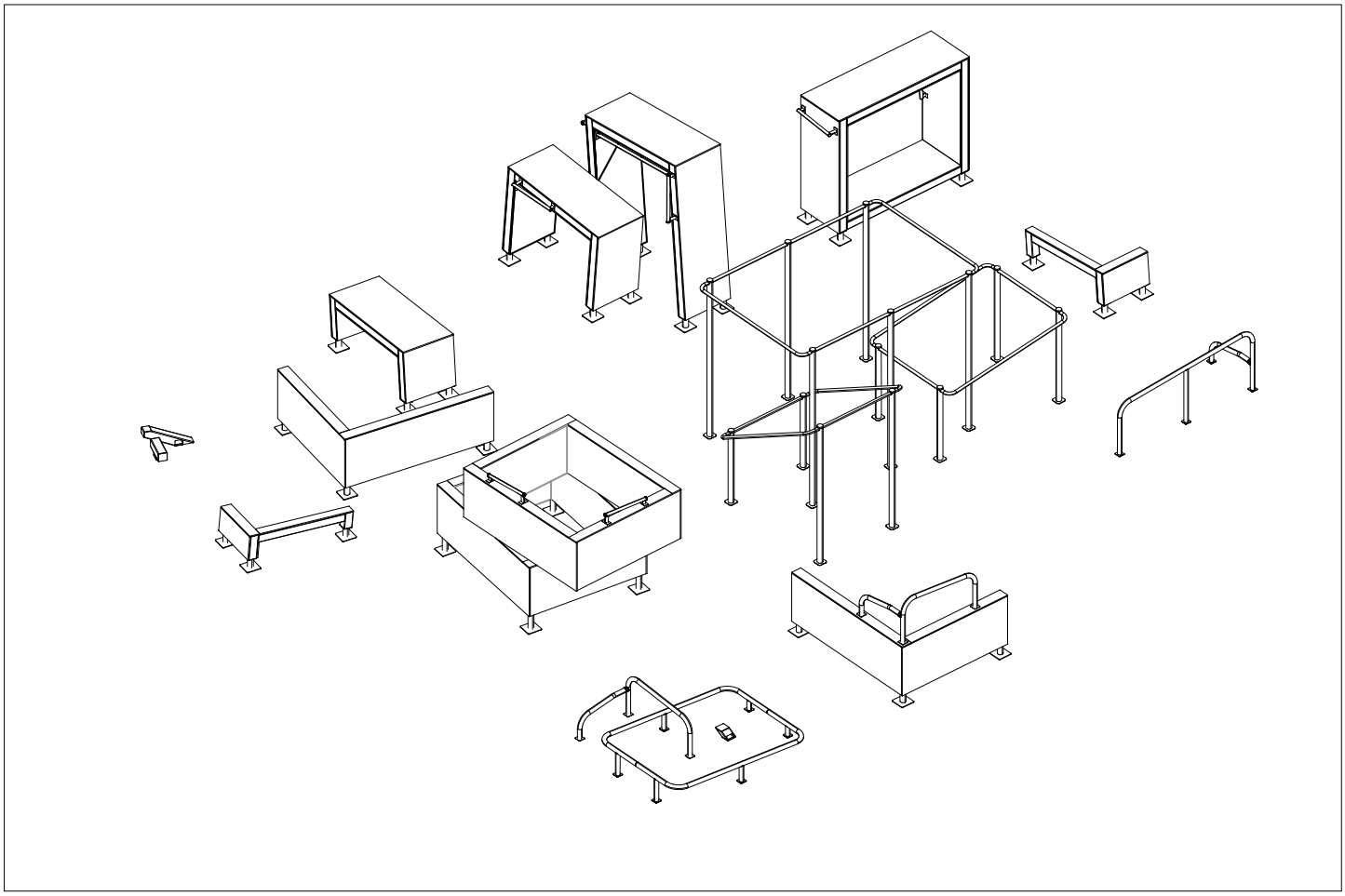

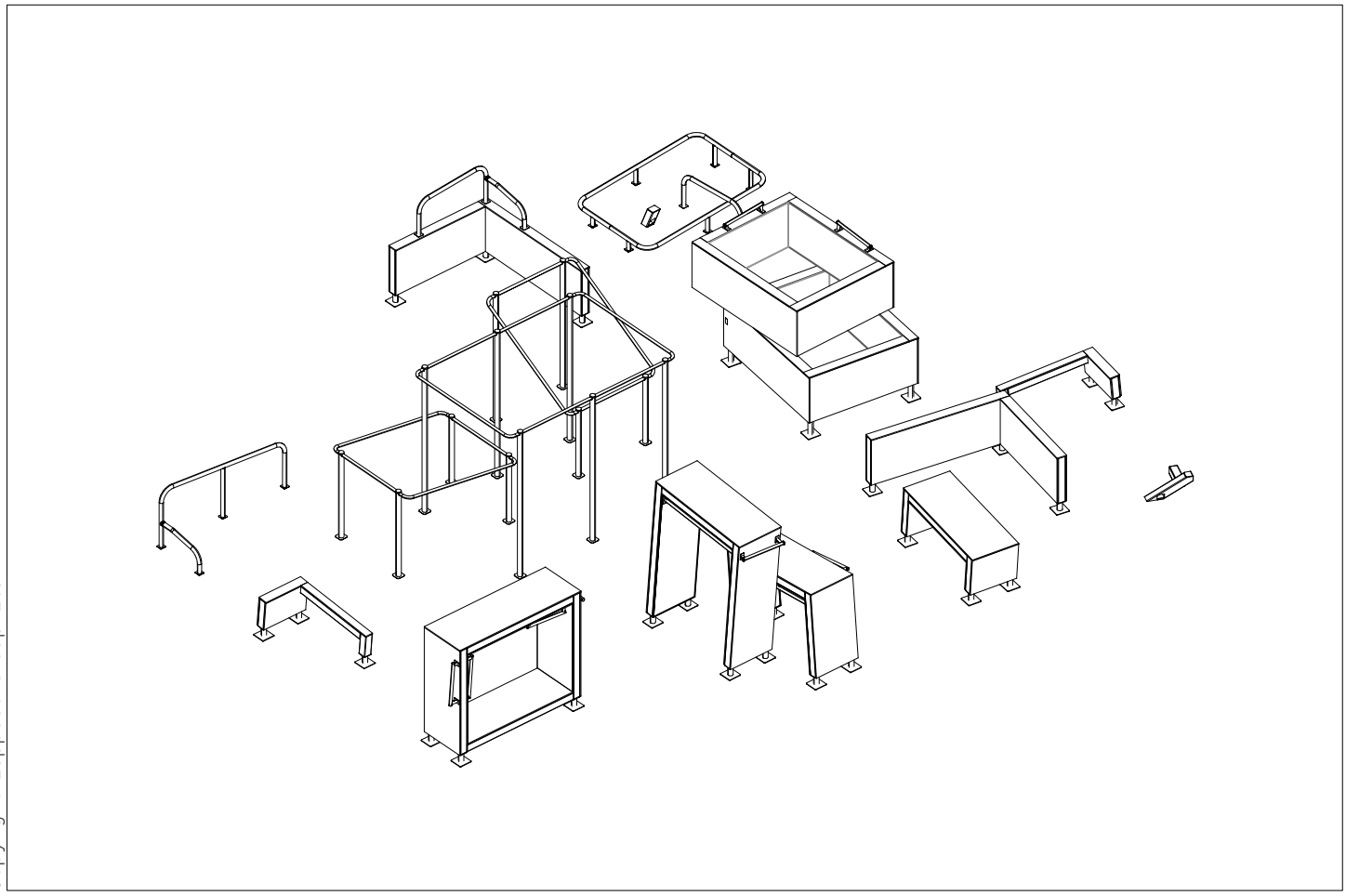

Copyright Lappset Group Ltd

LAPPSET®

081730M

DATE: 22.8.2019

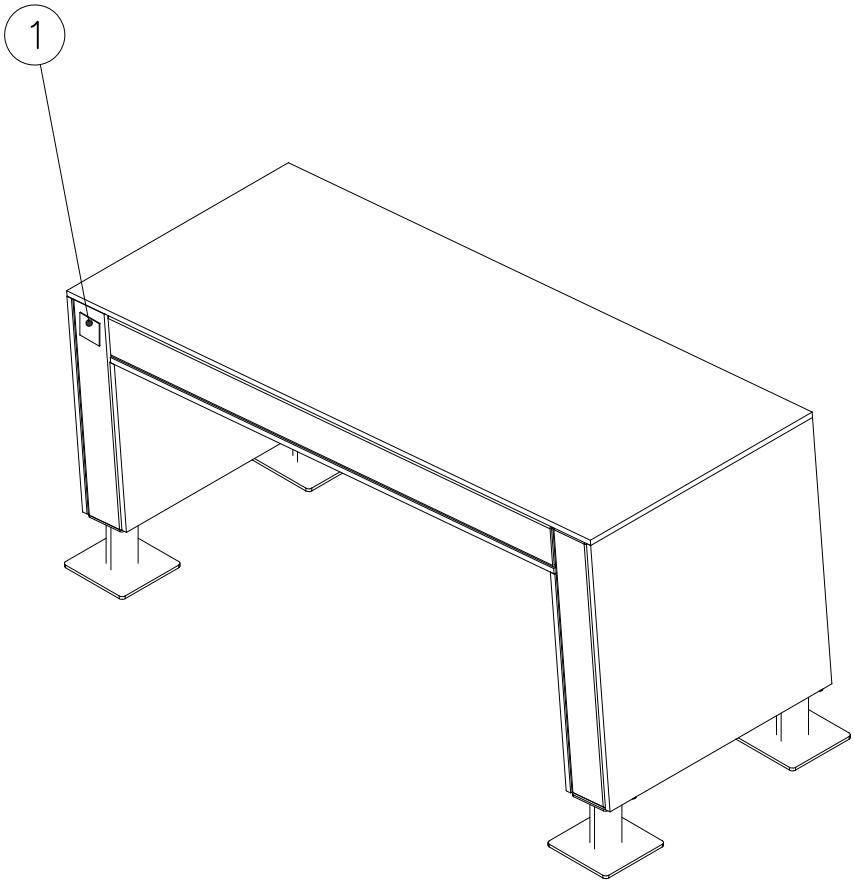

		PCS			PCS
1 702286	65x65	1	2 707210	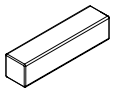 118x118x503	4
3 707213	118x118x1490	2	4 708127	118x118x603	2
5 708137	118x118x745	2	6 708721	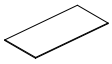 15x745x1766	1
7 708725	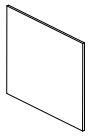 15x603x745	1	8 708726	15x745x745	1
9 708834	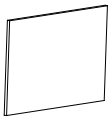 15x745x470	1	10 708835	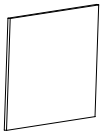 15x745x612	1
11 708857 JIG	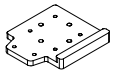 20x133x149	1	12 709204	15x745x1495	1
13 900240	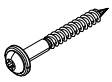 Ø8x70	32	14 903093	Ø8x90	8
15 905103	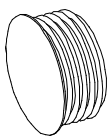 PT-28/32-H	8	16 905112	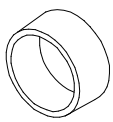 Ø22	8

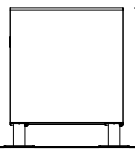

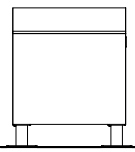

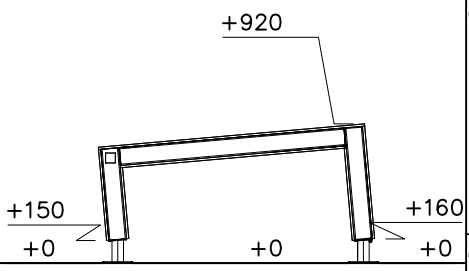

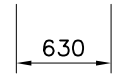

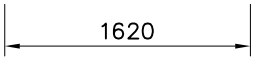

Copyright Lappset Group Ltd

LAPPSET®

081730M

DATE: 22.8.2019

	PCS		PCS		PCS		PCS		PCS		PCS		PCS
17 908698	8	18 910266	4	19 980114	4	20 980100	48	21 980123	38				
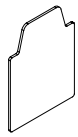		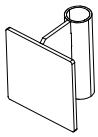											
3x114x108		90x108x118		Ø4x20		Ø5x60		Ø7x60					

	PCS		PCS		PCS

FOOT OPTIONS

709261+		709262+	
910267 SURFACE	PCS 4	910567 CONCRETE	PCS 4
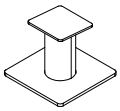			
152x200x200		117x117x715	

---- Falling Space 16.1 m2

Max Falling Height 920 mm

1:50

0 2

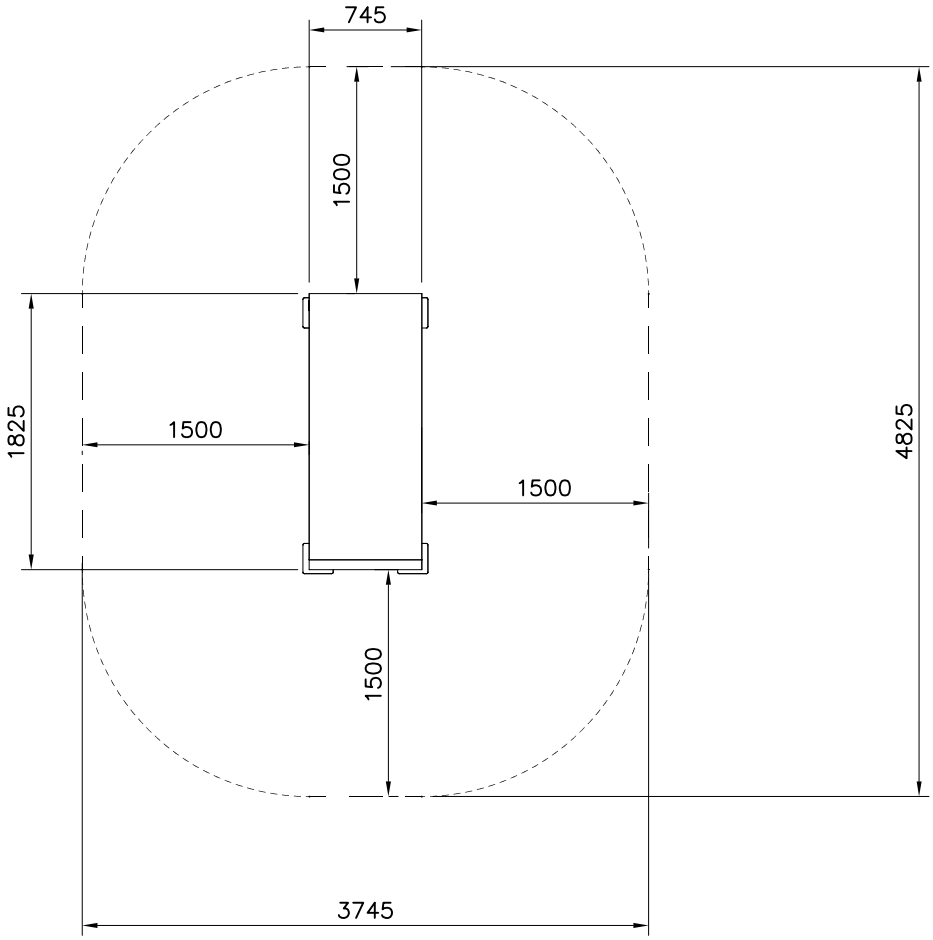

Copyright Lappset Group Ltd

LAPPSET®

081730M

FLORA

DATE: 22.8.2019

DET 1

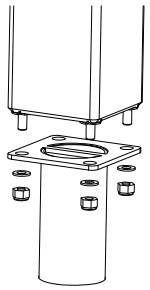

DET 2

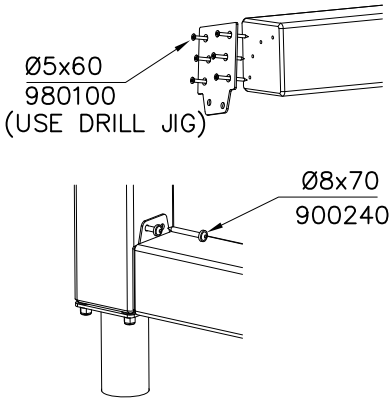

DET 3

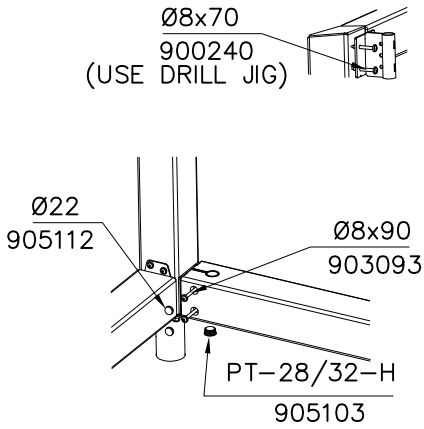

DET 4

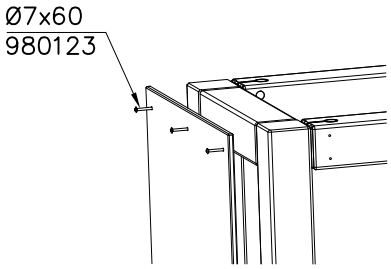

DET 5

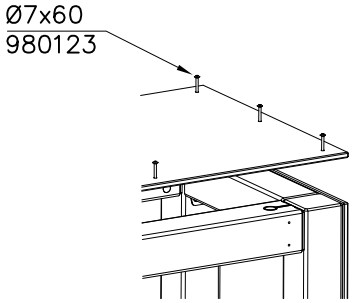

DET 6

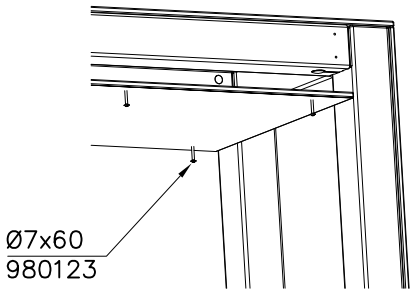

DET 7

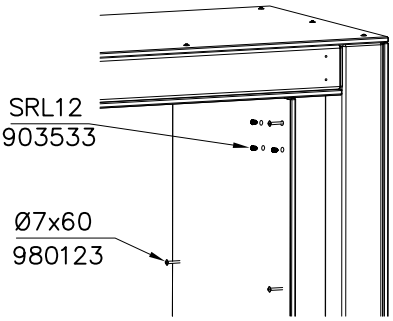

Copyright 1998 Lappset Group Ltd

LAPPSET®

081730M

DATE: 22.8.2019

DET 5
6
3
DET 3
18
17
DET 2
DET 4
8
7
12
9
DET 6
10
DET 7
2
DET 1
FOOT

JIG DET A (USE DET 2–3)

NOTE:
Use drill jig 708857
to predrill Ø5↧50
holes for 910266
and 908698

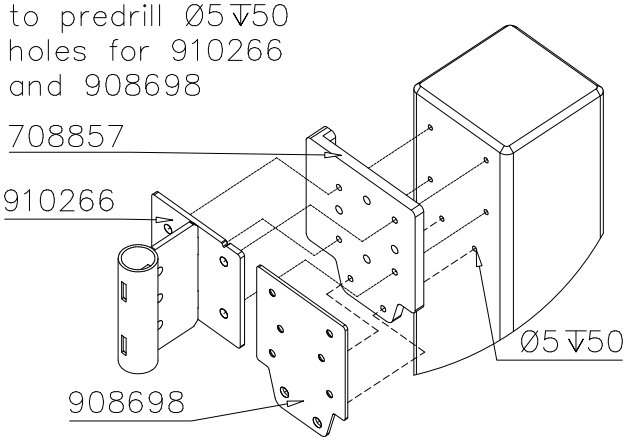

Copyright Lappset Group Ltd

LAPPSET®

081733M

DATE: 20.4.2020

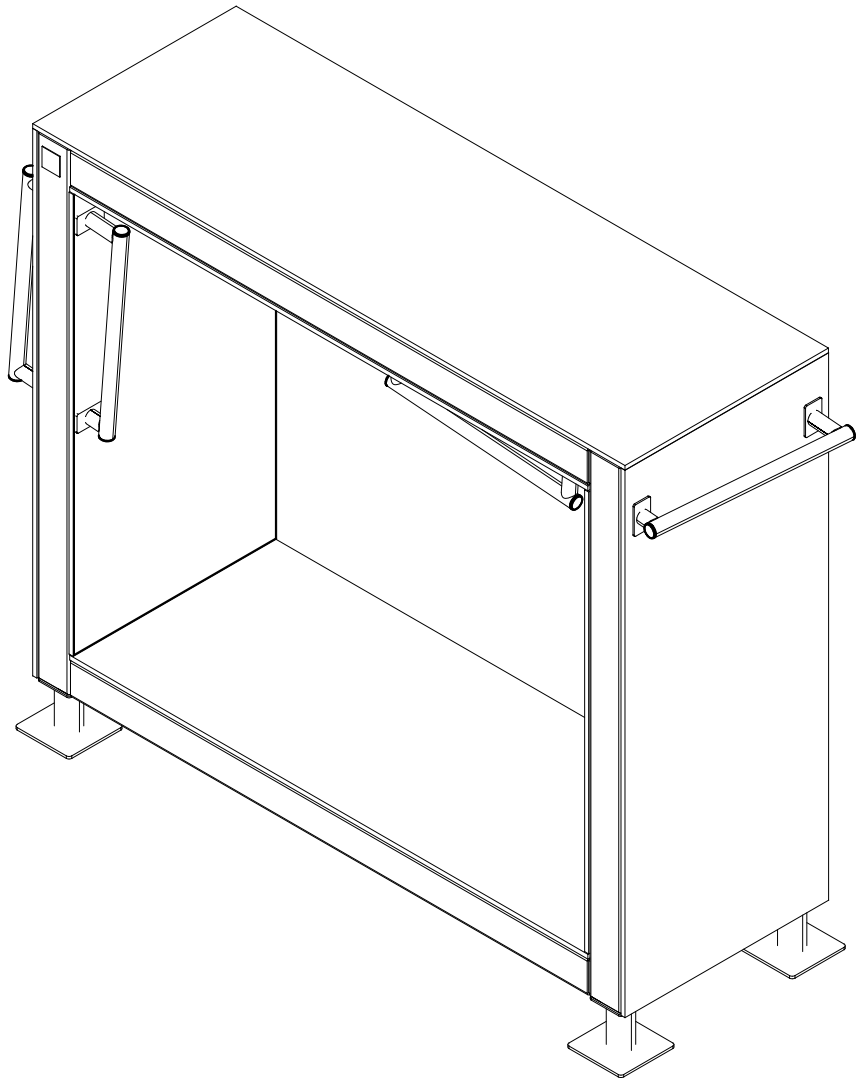

		PCS			PCS
1	707210	4	2	707517	4
	118x118x503			118x118x1892	
3	708346	4	4	708836	2
	118x118x1736			15x745x1736	
5	708837	1	6	708839	1
	15x745x2168			15x745x1897	
7	708857 JIG	1	8	911288 COLOR	2
	20x133x149			15x745x1465	
9	911289 COLOR	1	10	980114	4
	15x745x1897			Ø4x20	
11	900240	64	12	903093	16
	Ø8x70			Ø8x90	
13	905103	8	14	905112	16
	PT-28/32-H			Ø22	
15	908371	8	16	908698	8
	42-38/40			3x114x108	

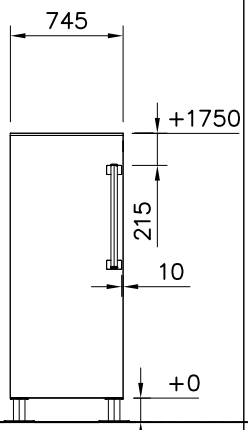

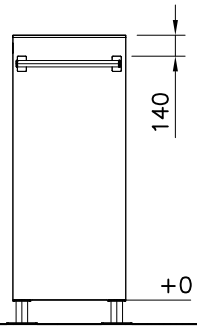

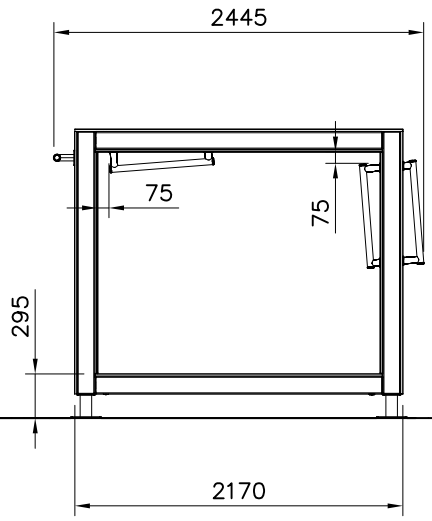

Copyright Lappset Group Ltd

LAPPSET®

081733M

DATE: 20.4.2020

17 910056	PCS	18 910266	PCS	19 980100	PCS	20 980123	PCS	21 702286	PCS		PCS		PCS
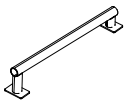	4	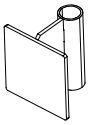	8		48		65		1				
140x690		90x108x118		Ø5x60		Ø7x60		65x65					

FOOT OPTIONS

709261+		709262+	
910330 SURFACE	PCS 4	910567 CONCRETE	PCS 4
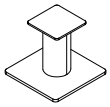		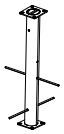	
152x200x200		117x117x715	

——— EN Impact Attenuating Surface (IAS) 21.9 m2

– – – – Falling Space 21.9 m2

Max Falling Height 1910 mm

1:50

0 2

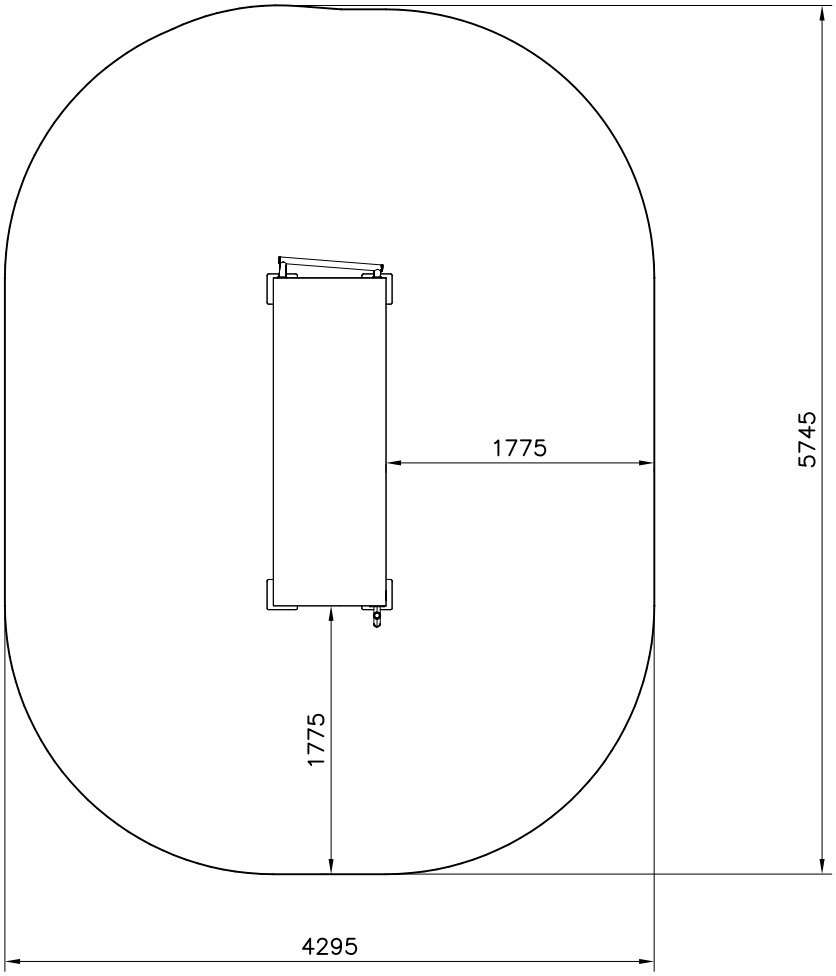

Copyright Lappset Group Ltd

LAPPSET®

081733M

DATE: 20.4.2020

DET 1

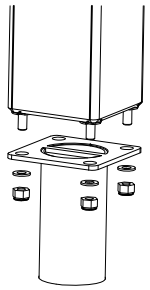

DET 2

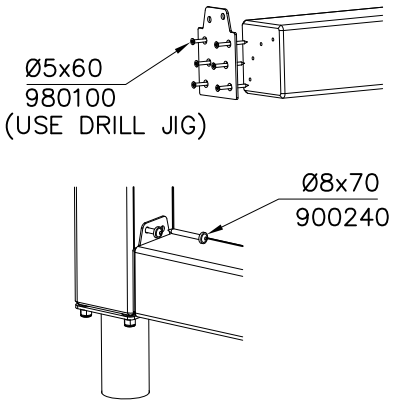

DET 3

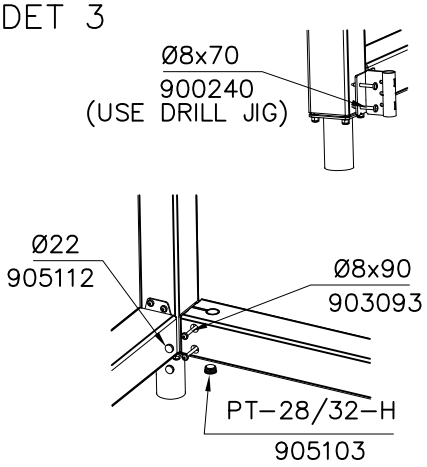

DET 4

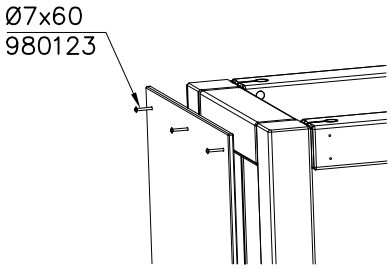

DET 5

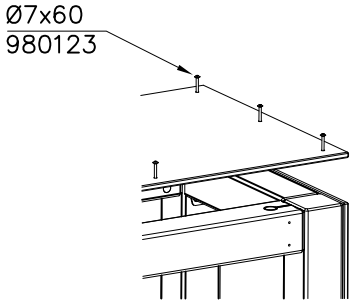

DET 6

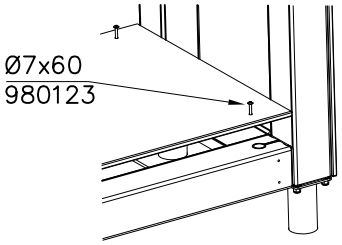

DET 7

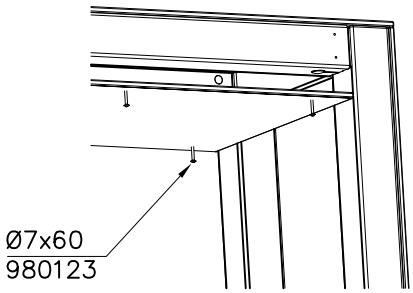

DET 8

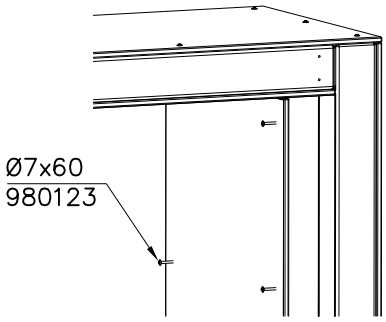

DET 9

DRILL PREHOLES BEFORE INSTALLING HANDLES

Copyright 1998 Lappset Group Ltd

LAPPSET®

081733M

DATE: 20.4.2020

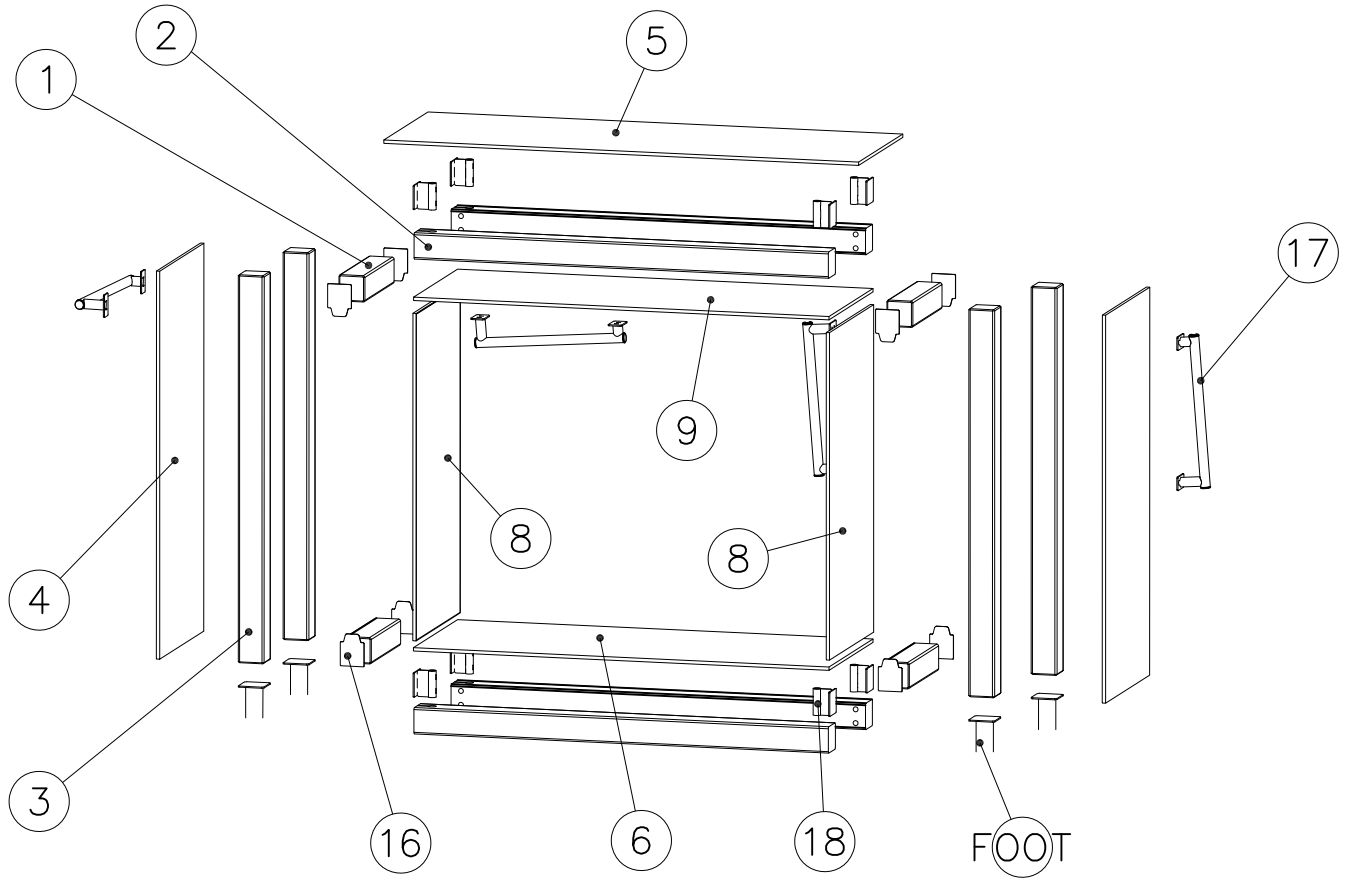

JIG DET A (USE DET 2–3)

NOTE:
Use drill jig 708857
to predrill Ø5↧50
holes for 910266
and 908698

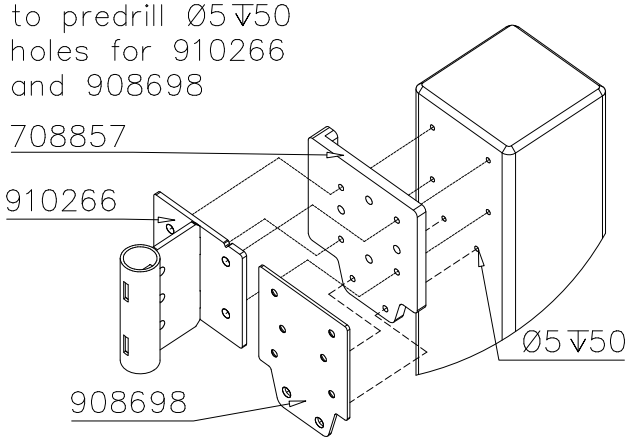

JIG DET B (USE DET 9)

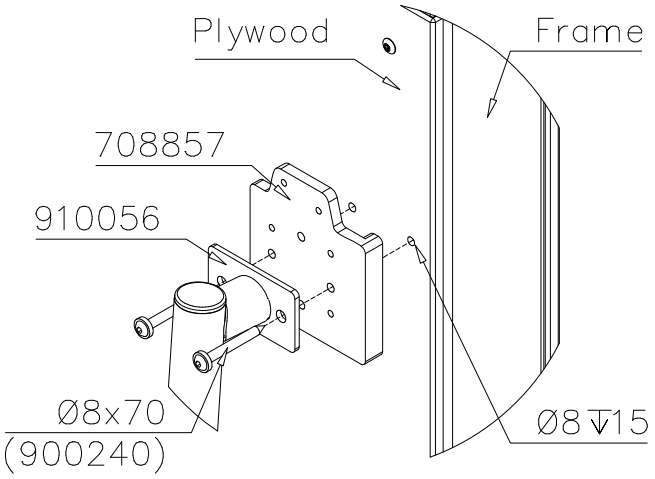

Copyright Lappset Group Ltd

LAPPSET®

081734M

DATE: 19.2.2021

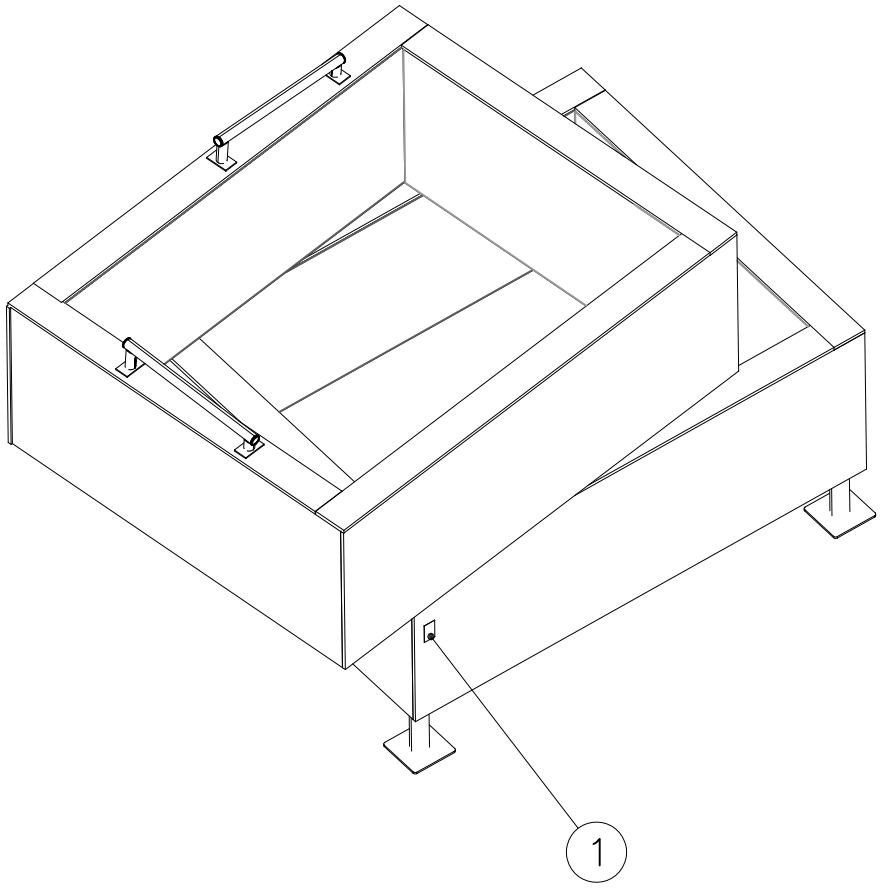

		PCS			PCS
1 702341	90x50	1	2 707213	118x118x1490	8
3 707517	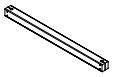 118x118x1892	8	4 708137	118x118x745	4
5 708836	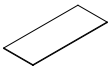 15x745x1736	4	6 708837	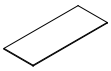 15x745x2168	4
7 708839	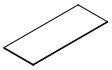 15x745x1897	2	8 708840	15x148x2018	4
9 708841	15x148x1616	4	10 708857 JIG	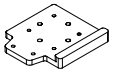 20x133x149	1
11 911288 COLOR	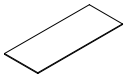 15x745x1465	4	12 911289 COLOR	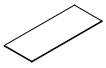 15x745x1897	2
12 910056	140x690	2	14 980123	Ø7x60	216
15 900240	Ø8x70	128	16 903093	Ø8x90	72

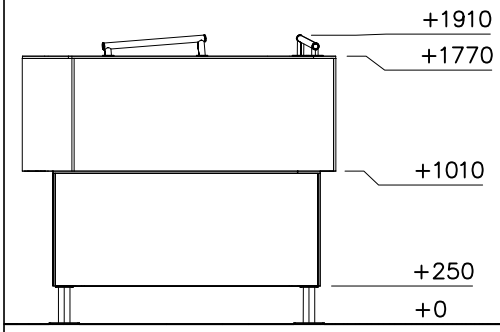

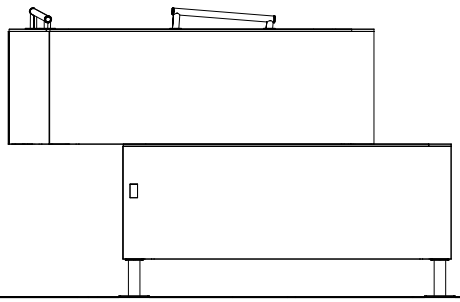

1620

2020

Copyright Lappset Group Ltd

LAPPSET®

081734M

DATE: 17.10.2022

17	905103	PCS	18	905112	PCS	19	910266	PCS	20	709110	PCS	21	905086	PCS	22	908371	PCS
		24			64			32			4			8			4
	PT–28/32–H			Ø22			90x108x118			118x118x745			Ø44/13.5 x 3.9			42–38/40	

23	909132	PCS	24	909248	PCS
		4			4
	M12x280			M12	

FOOT OPTIONS

710175+			710176+		
	911817	PCS		911820	PCS
	SURFACE	4		CONCRETE	4
	250x200x200			803x117x117	

EN Impact Attenuating Surface (IAS) 28.1 m2

Falling Space 28.1 m2

Max Falling Height 1910 mm

1:50

0 2

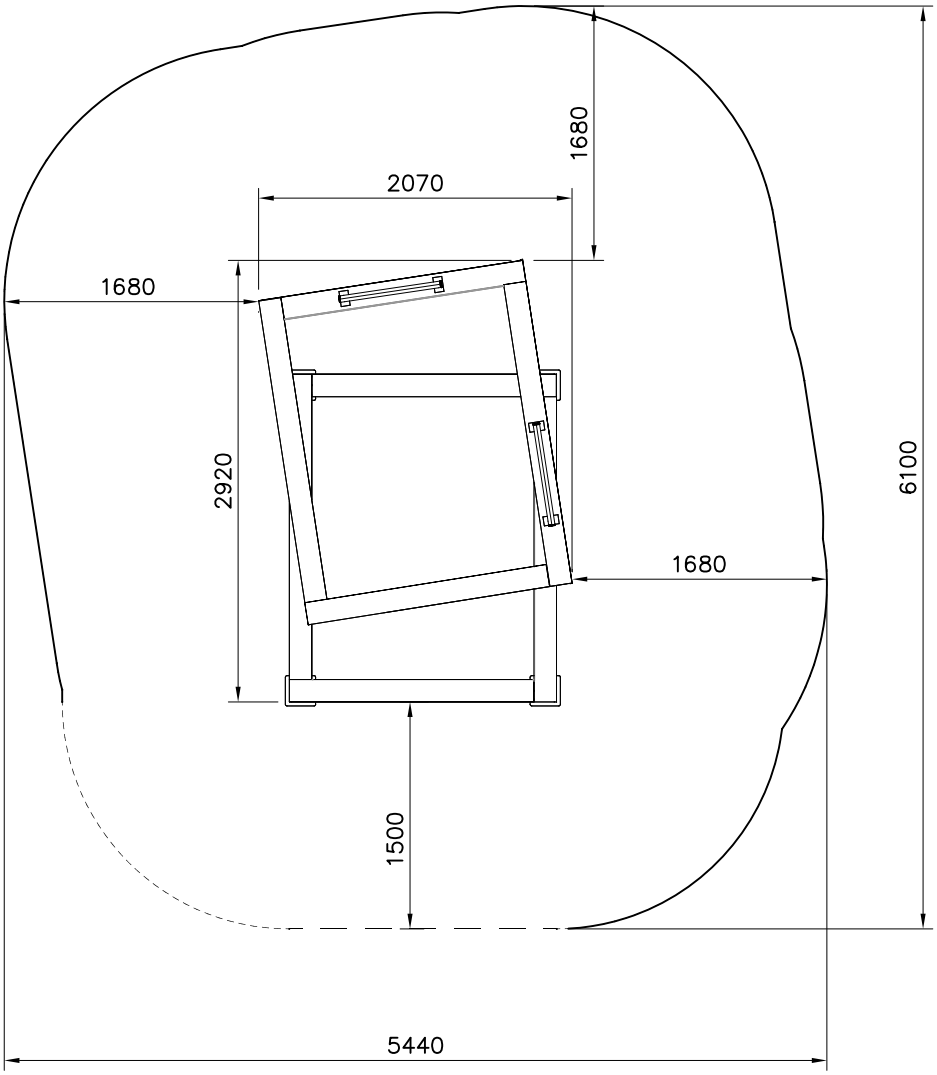

Copyright Lappset Group Ltd

LAPPSET®

081734M

DATE: 19.2.2021

DET 1

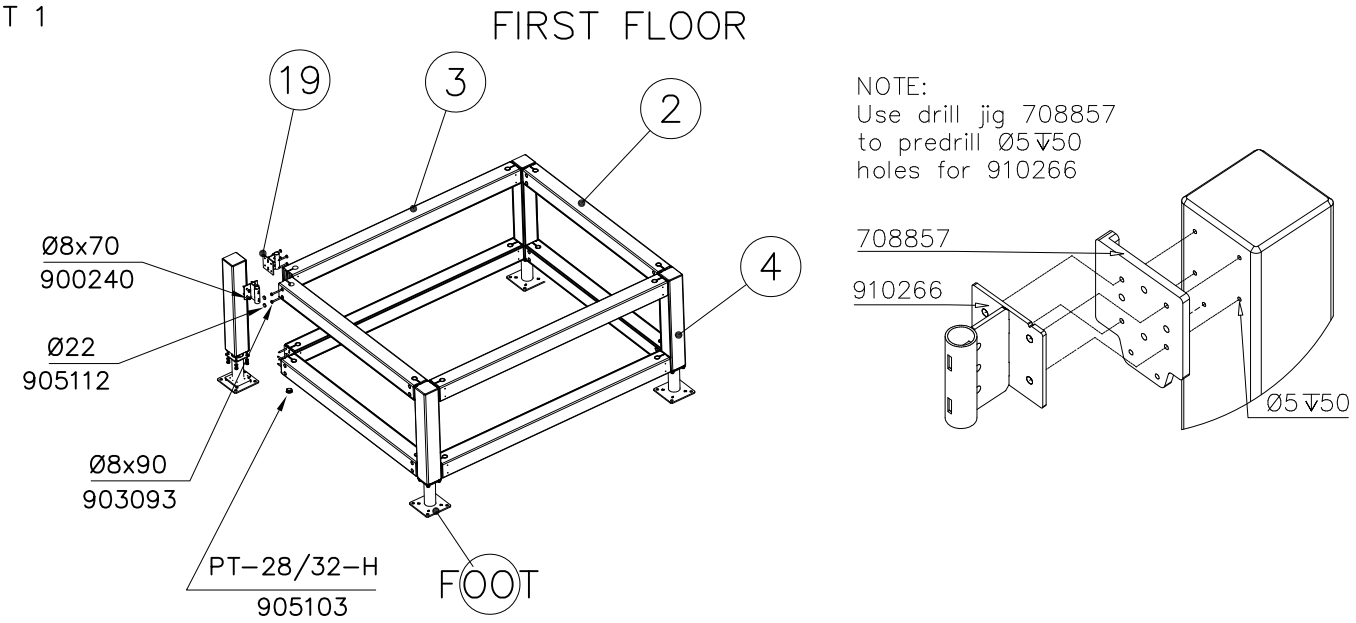

DET 2

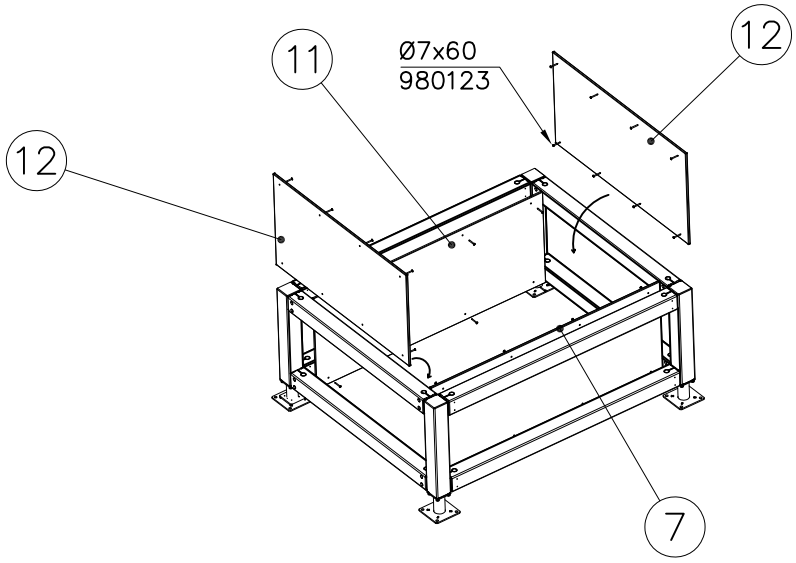

DET 3

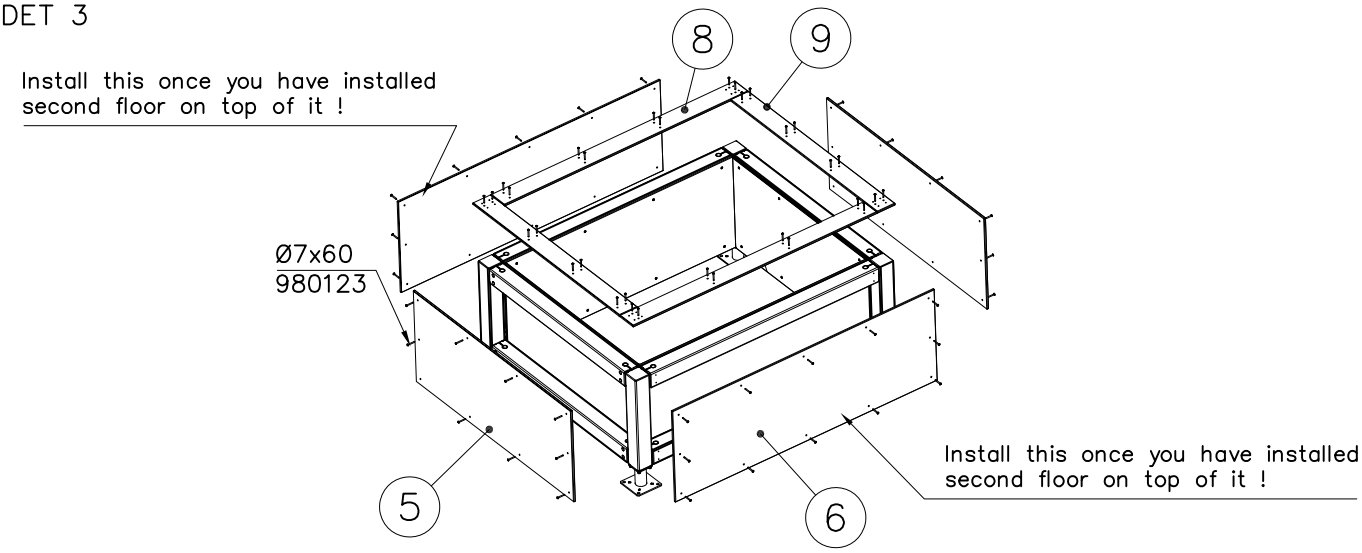

Copyright 1998 Lappset Group Ltd

LAPPSET®

081734M

DATE: 19.2.2021

DET 4

SECOND FLOOR

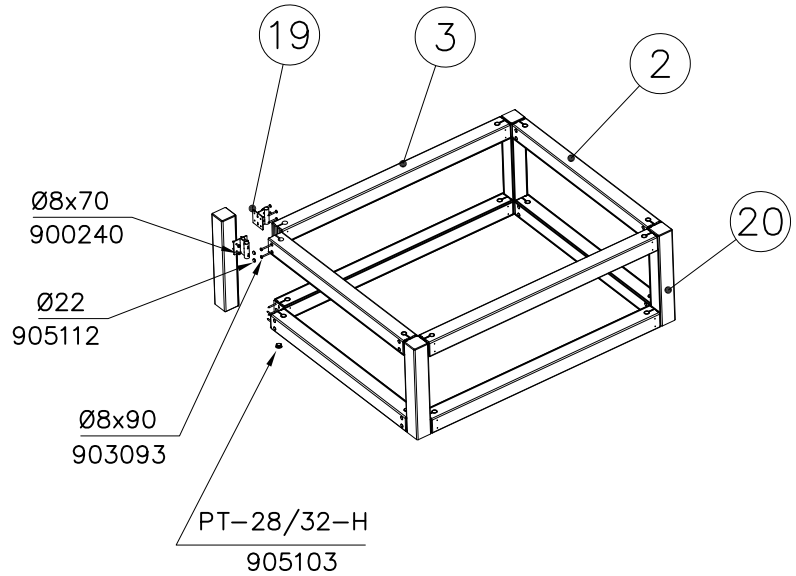

NOTE:
Use drill jig 708857
to predrill Ø5↧50
holes for 910266

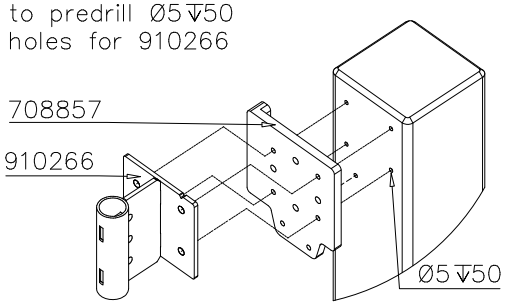

DET 5

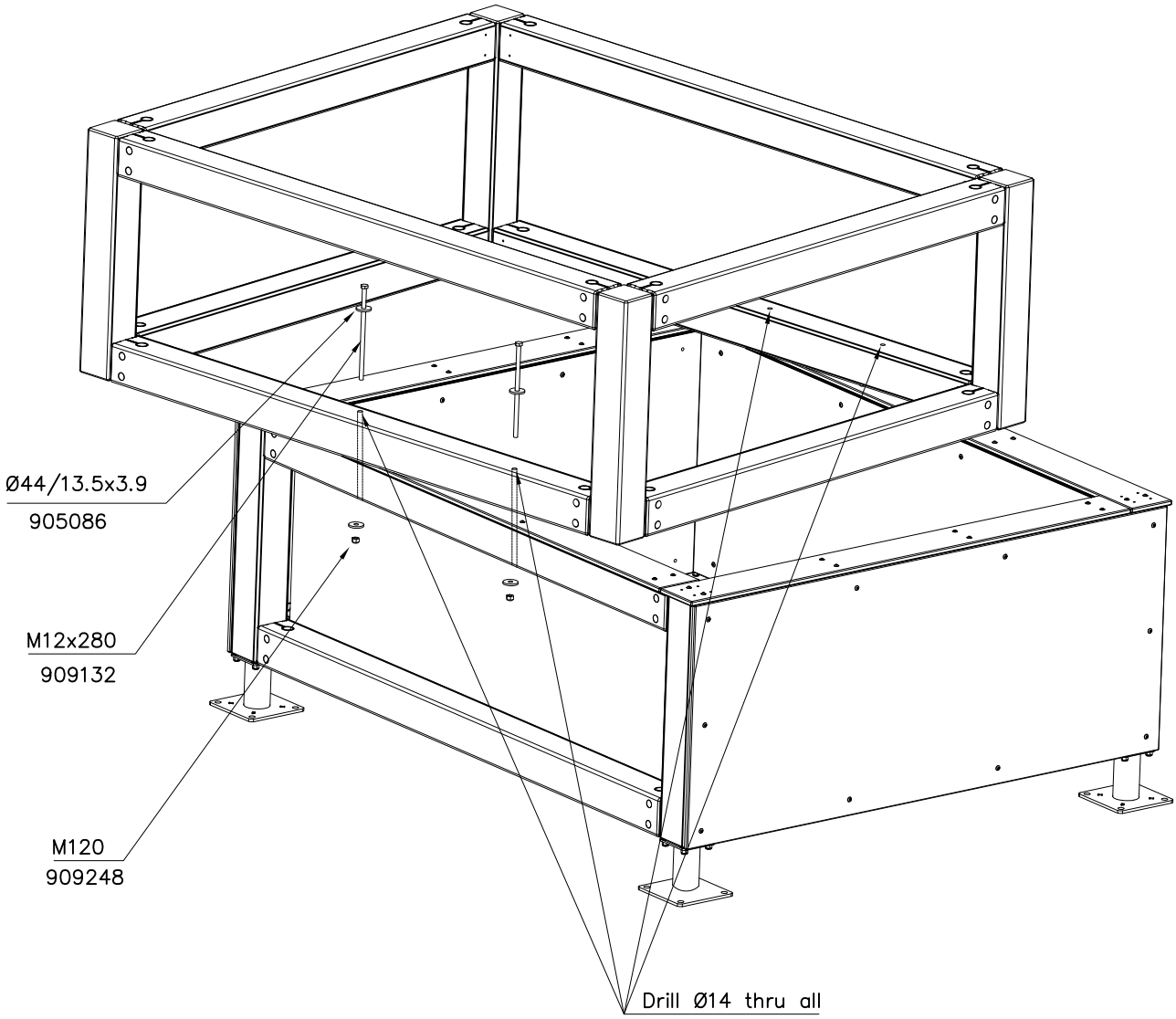

Copyright 1998 Lappset Group Ltd

DET 6

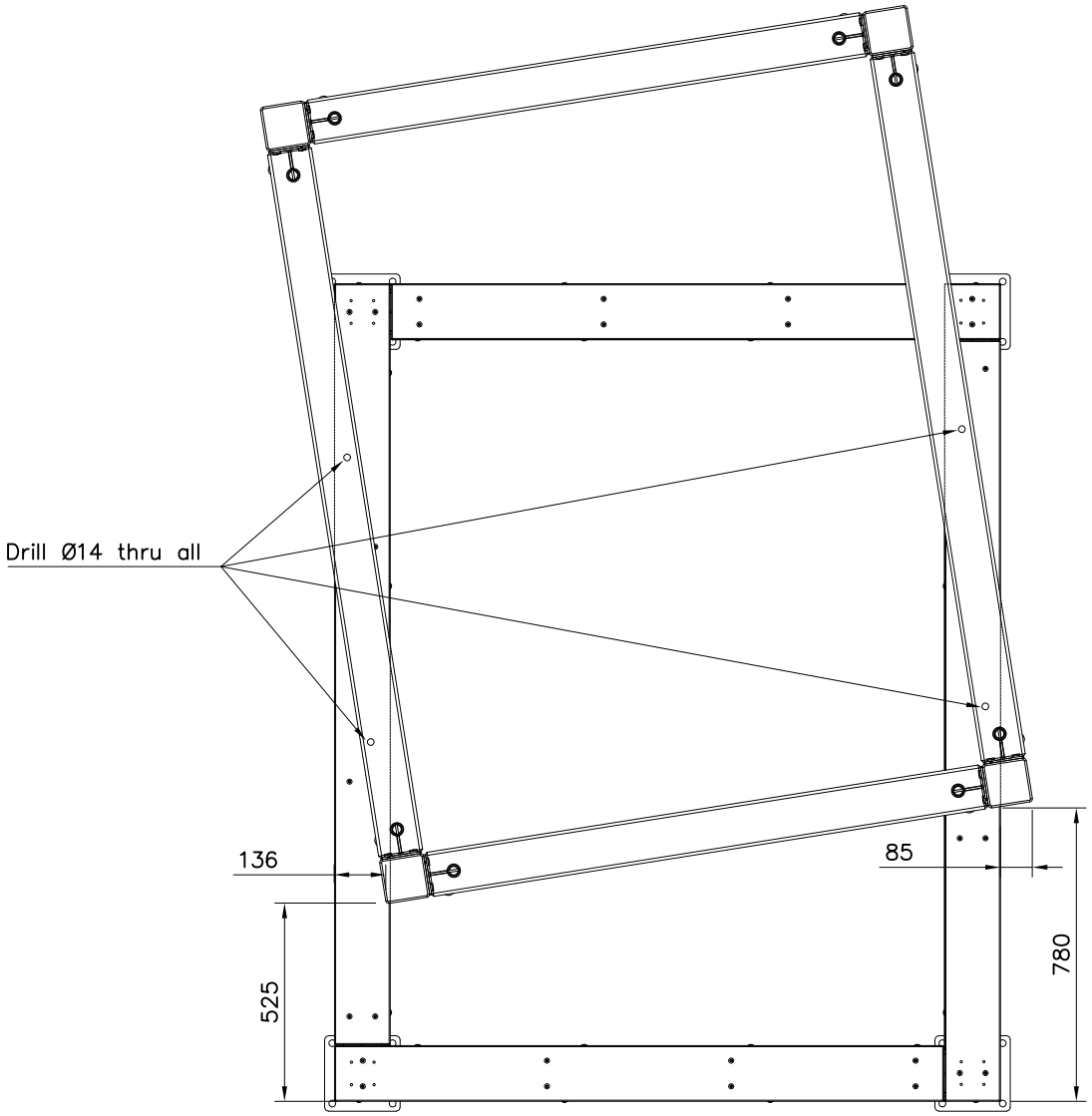

DET 7

Install all plates

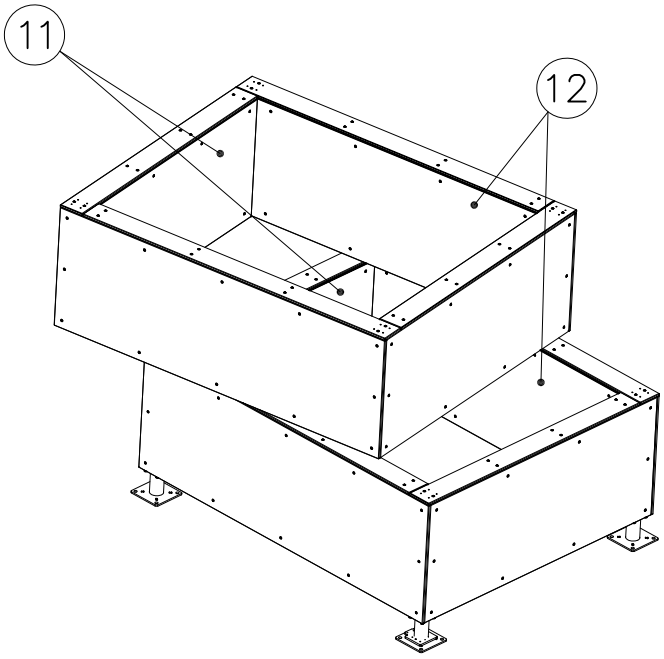

Copyright 1998 Lappset Group Ltd

LAPPSET®

081734M

DATE: 19.2.2021

DET 8

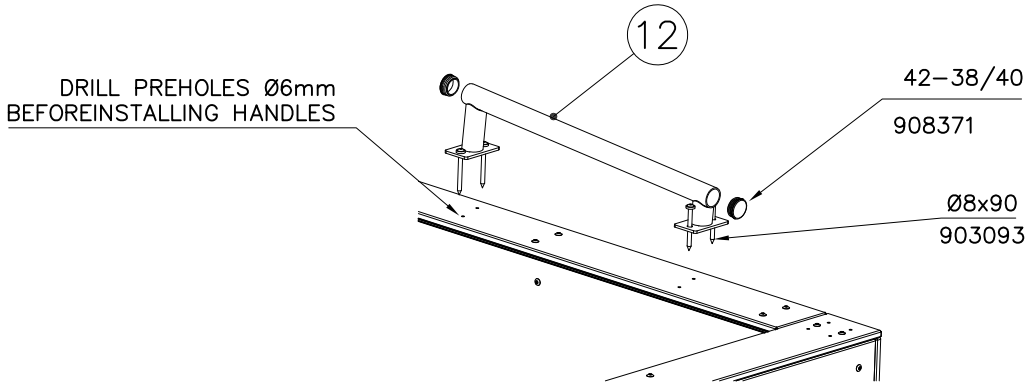

DET 9

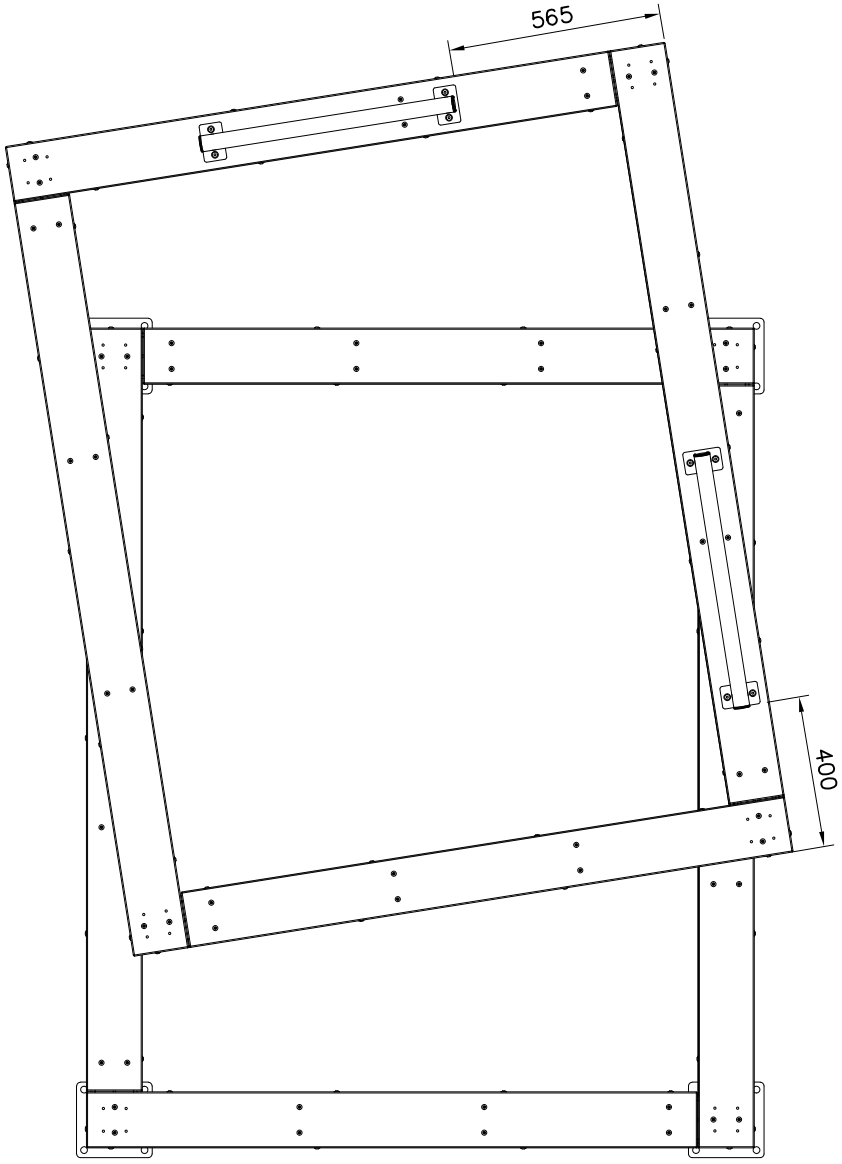

Copyright 1998 Lappset Group Ltd

LAPPSET®

081737M

DATE: 20.4.2020

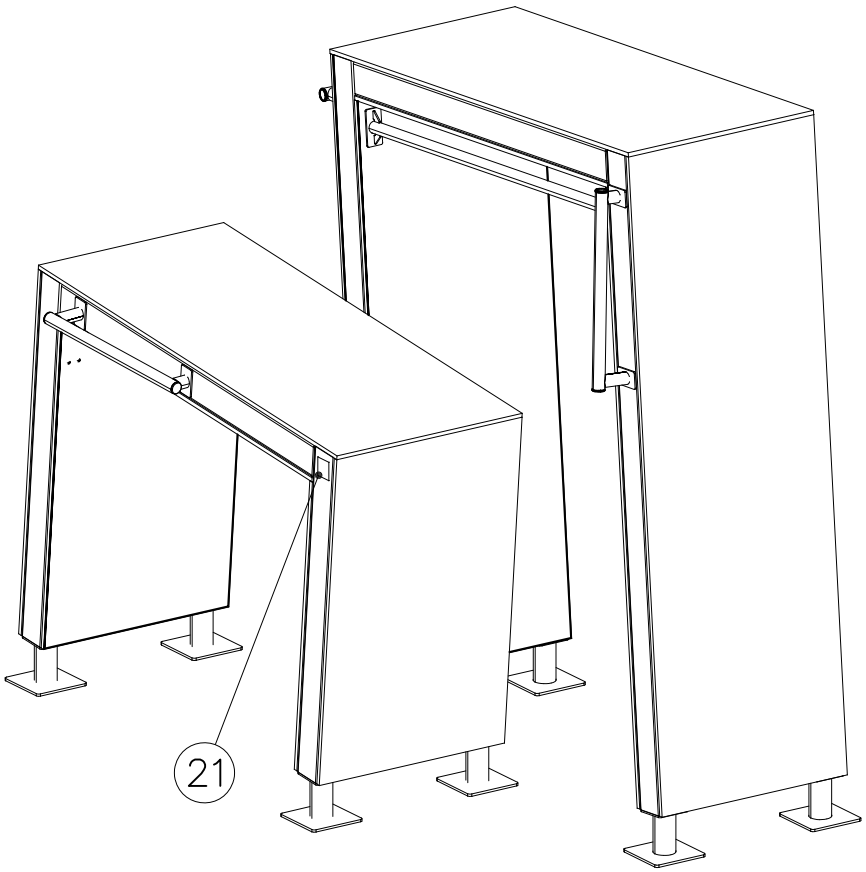

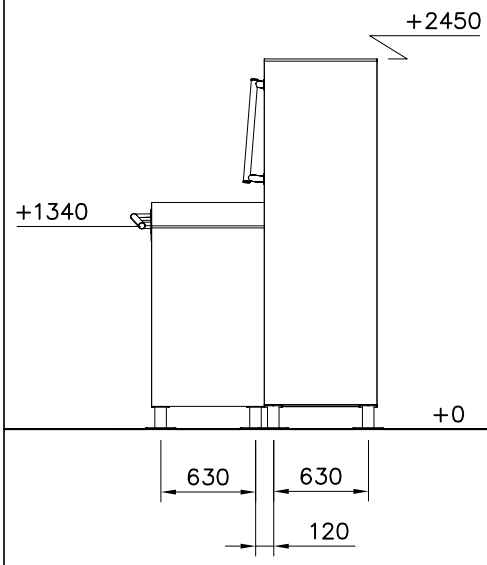

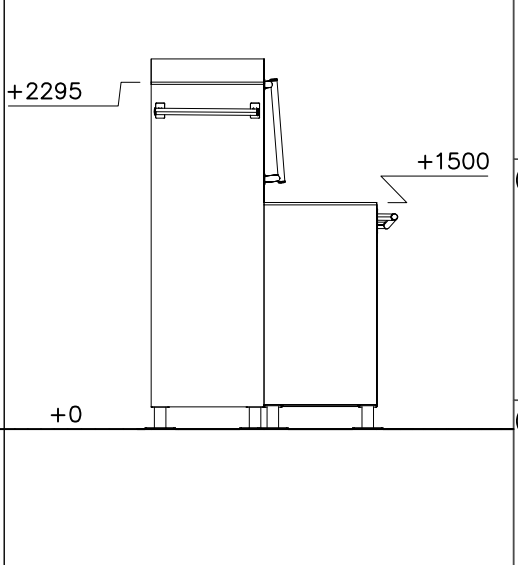

		PCS			PCS
1	707210	8	2	707213	4
	118x118x503			118x118x1490	
3	708042	2	4	708125	2
	118x118x1185			118x118x1326	
5	708522	2	6	708688	2
	118x118x2139			118x118x2279	
7	708721	2	8	708722	1
	15x745x1766			15x745x2280	
9	708723	1	10	708724	1
	15x745x1185			15x745x1326	
11	708857 JIG	1	12	900240	100
	20x133x149			Ø8x70	
13	903093	16	14	903533	6
	Ø8x90			SRL12	
15	905103	16	16	905112	16
	PT-28/32-H			Ø22	

Copyright Lappset Group Ltd

LAPPSET®

081737M

DATE: 20.4.2020

17	908371	PCS	18	908698	PCS	19	910056	PCS	20	910266	PCS	21	702286	PCS	22	910328	PCS
		6			16			3			8			1			3
	42–38/40			3x114x108			140x690			90x108x118			65x65			L 1466	
23	980100	PCS	24	980123	PCS	25	911297 MURAL	PCS	26	911293 COLOR	PCS	27	911295 COLOR	PCS	28	911301 COLOR	PCS
		96			106			1			1			1			1
	Ø5x60			Ø7x60			12x745x2140			15x745x2145			15x745x2004			15x745x1495	
29	911103 COLOR	PCS	30	911305 COLOR	PCS	31	911307 COLOR	PCS	32	905086	PCS	33	909132	PCS	34	909248	PCS
		1			1			1			2			1			1
	15x745x1495			15x745x1192			15x745x1050	31		Ø44/13.5x3.9			M12x280			M12	
35	980114	PCS															
		4															
	Ø4x20																

FOOT OPTIONS

709261+		709262+	
910267 SURFACE	PCS	910567 CONCRETE	PCS
	8		8
152x200x200		117x117x715	

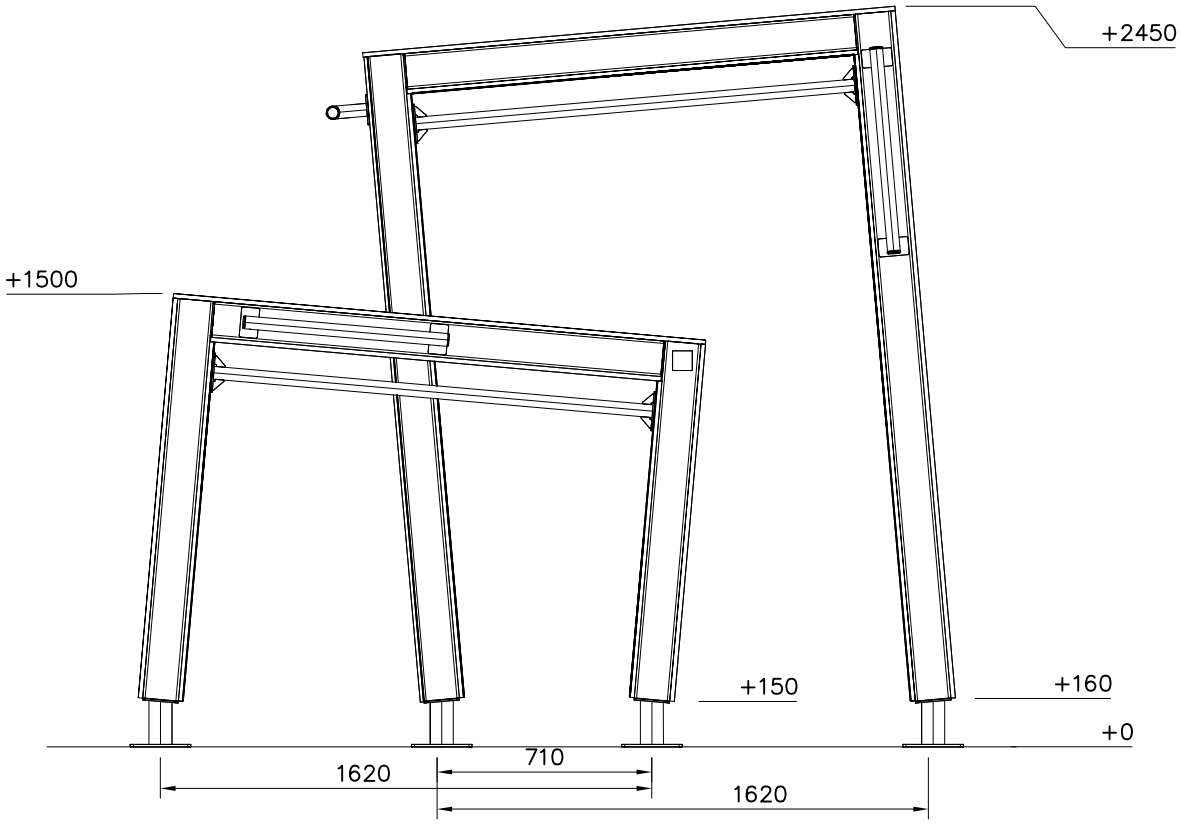

Copyright Lappset Group Ltd

LAPPSET®

081737M

DATE: 20.4.2020

EN Impact Attenuating Surface (IAS) 27.6 m2

Falling Space 27.6 m2

Max Falling Height 2450 mm

1:50

0 2

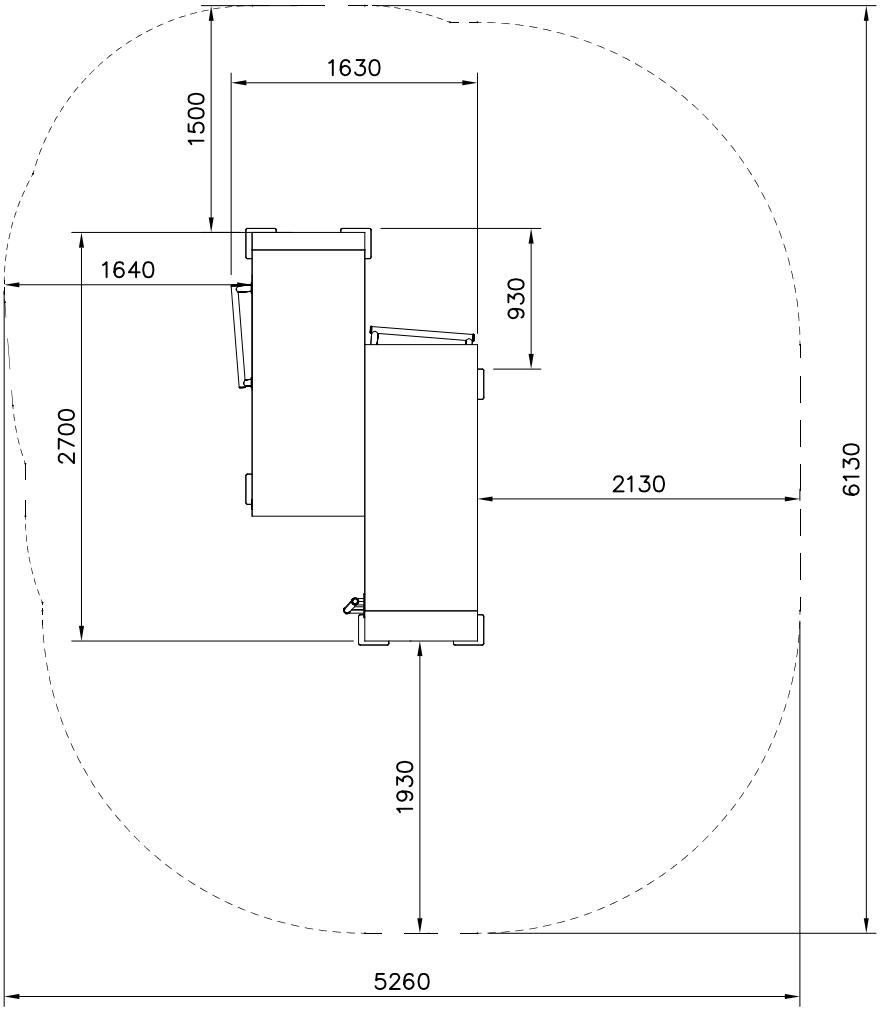

DET 1

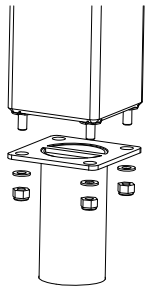

DET 2

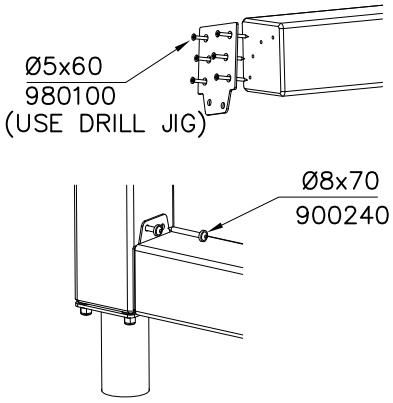

DET 3

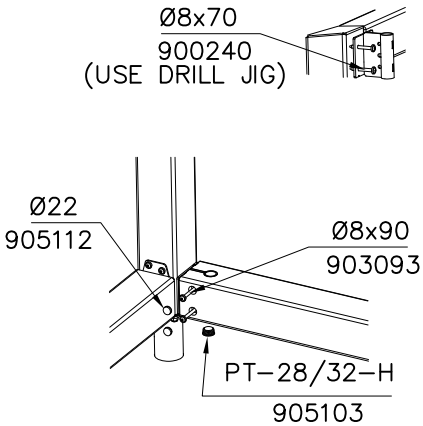

Copyright Lappset Group Ltd

LAPPSET®

081737M

DATE: 20.4.2020

DET 4

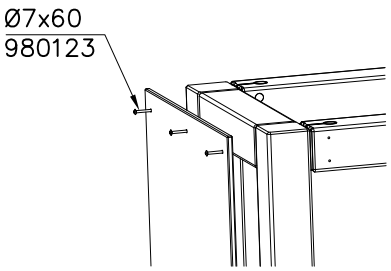

DET 5

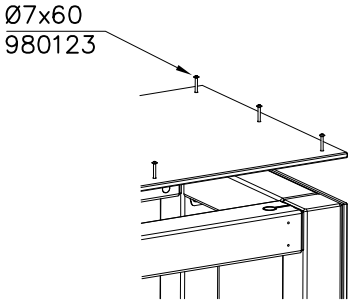

DET 6

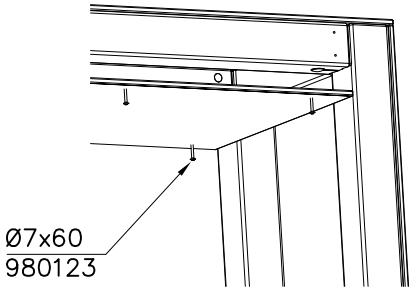

DET 7

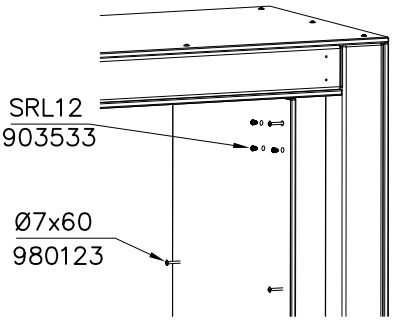

DET 8

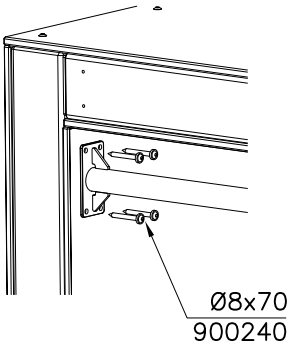

DET 9 DRILL PREHOLES Ø6mmBEFORE INSTALLING HANDLES

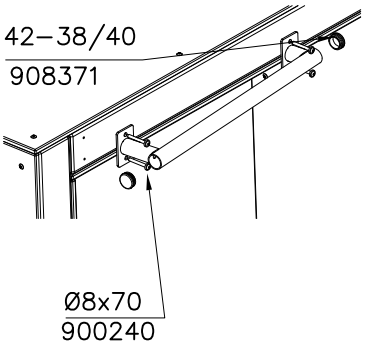

DET 10

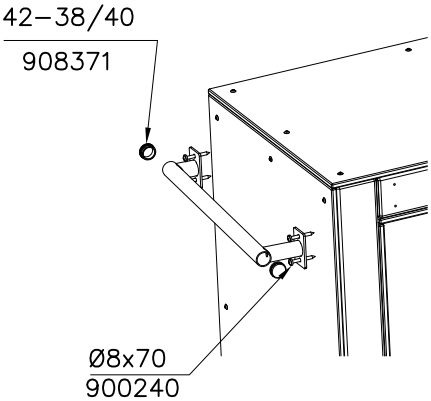

DET 11 DRILL PREHOLES BEFORE INSTALLING HANDLES

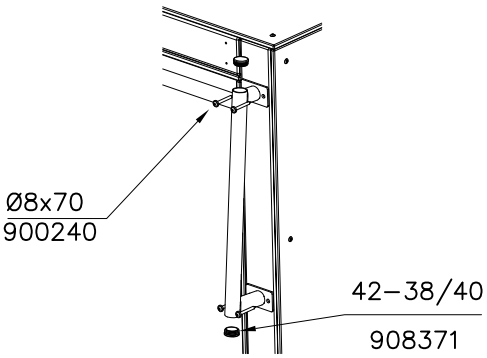

Copyright 1998 Lappset Group Ltd

LAPPSET®

081737M

DATE: 20.4.2020

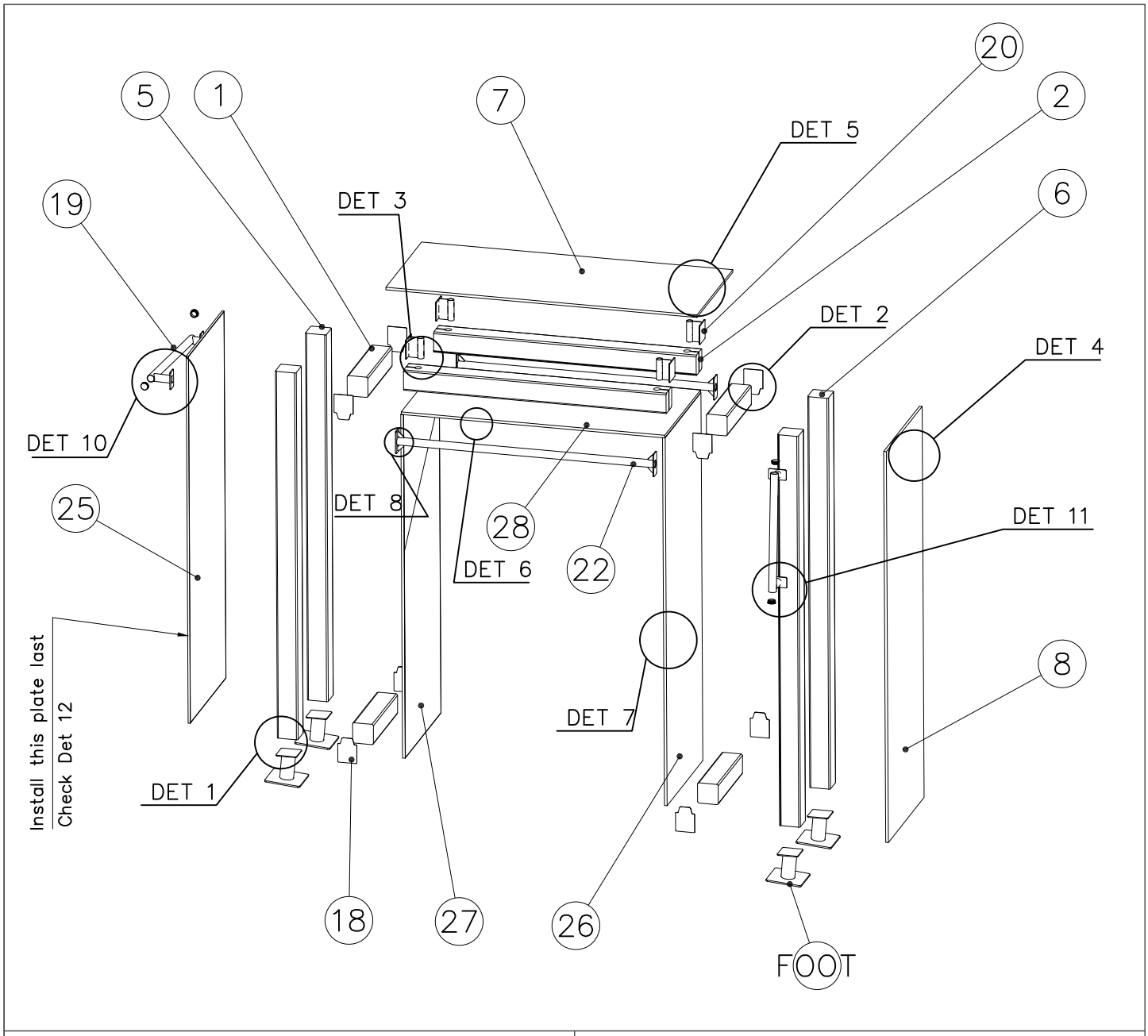

JIG DET A (USE DET 2–3)

NOTE:
Use drill jig 708857
to predrill Ø5↧50
holes for 910266
and 908698

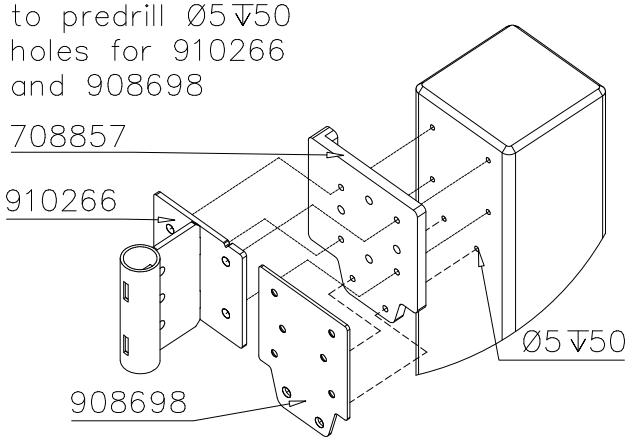

JIG DET B (USE DET 11)

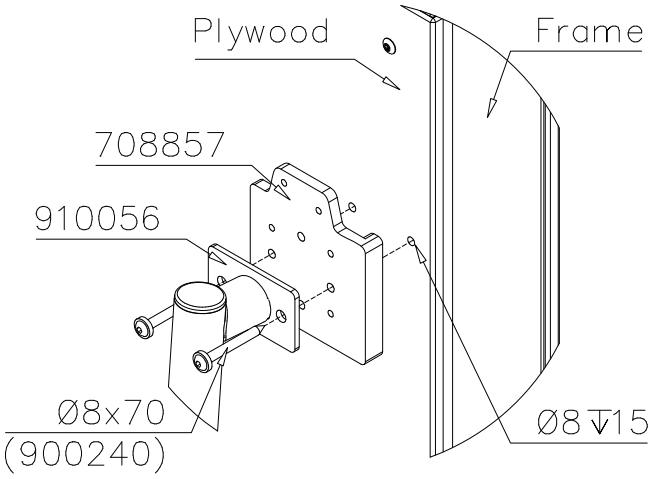

Copyright Lappset Group Ltd

LAPPSET®

081737M

DATE: 20.4.2020

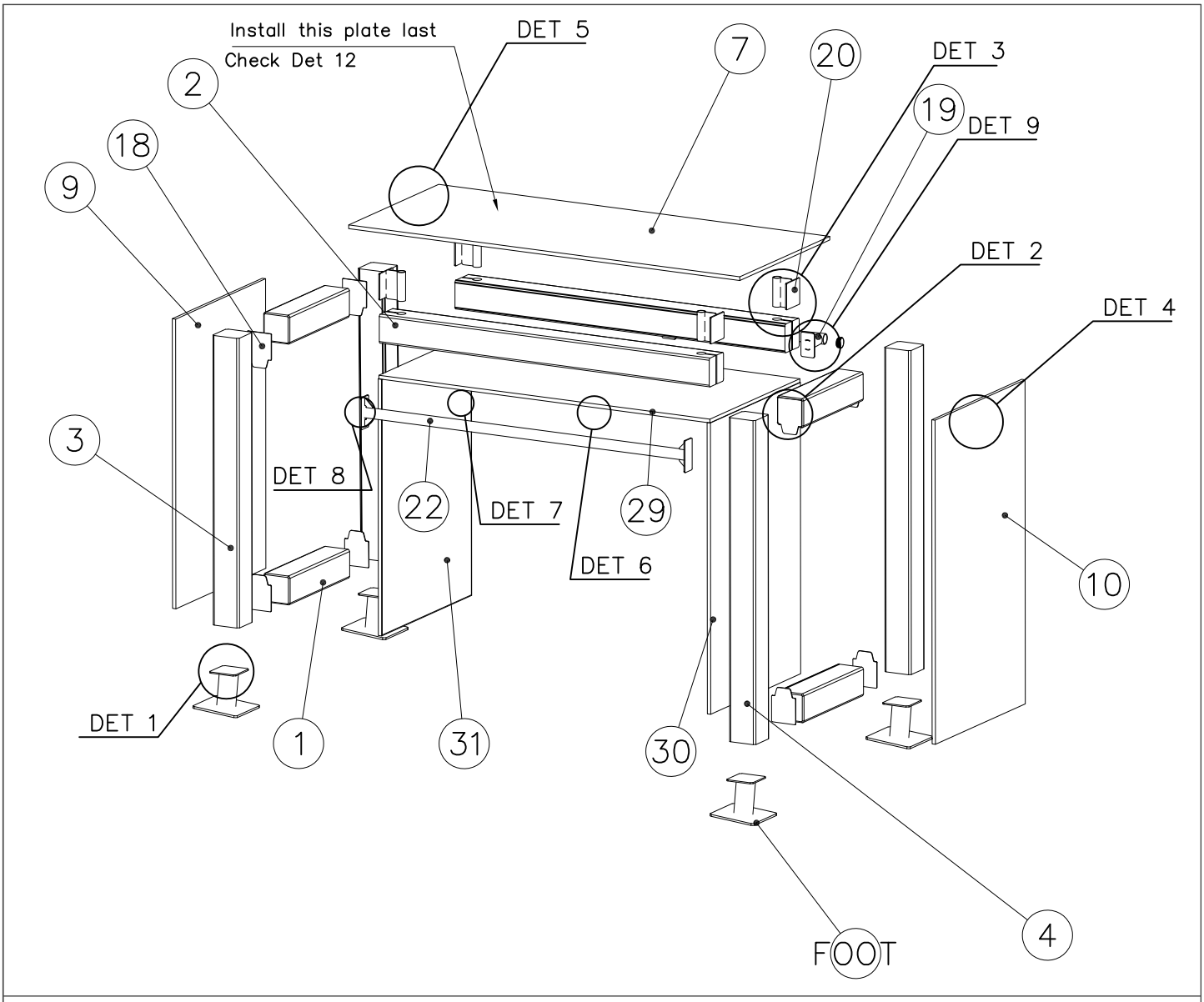

DET 12

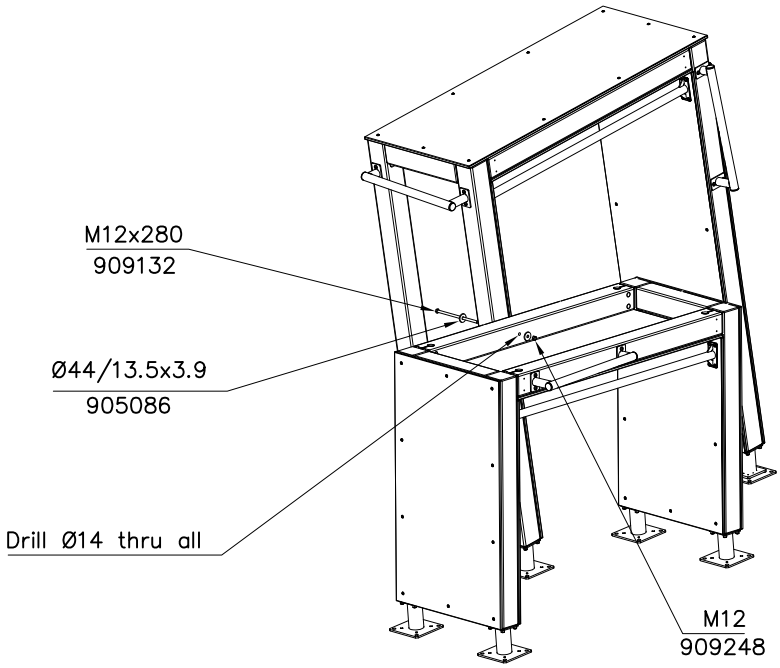

Copyright Lappset Group Ltd

LAPPSET®

081751M

DATE: 17.6.2020

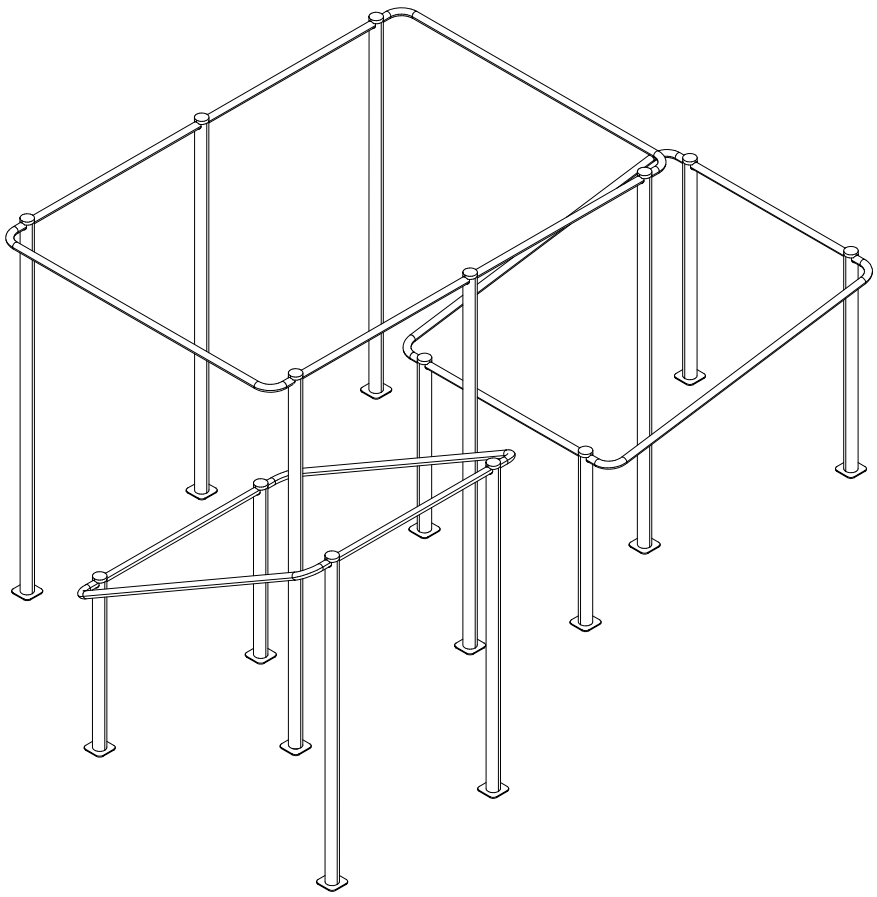

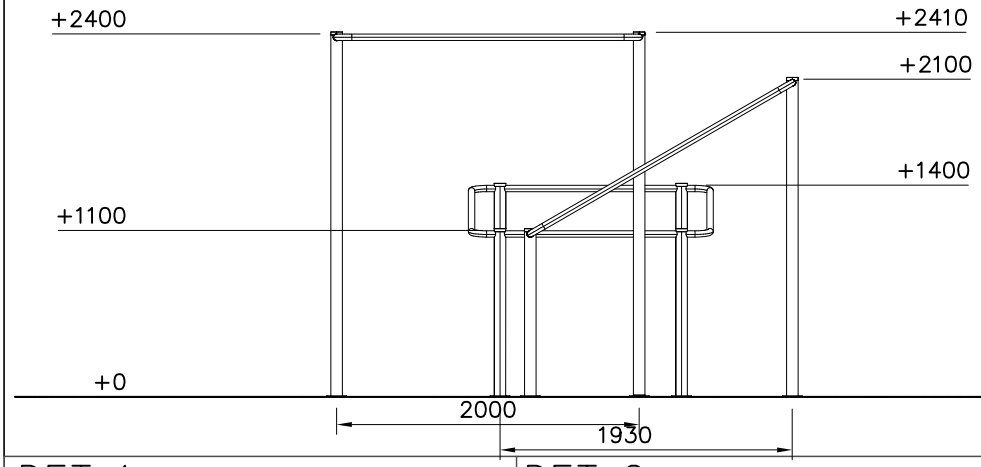

		PCS
1	702341 (90x50)	1
2	704879 (3x30x120mm)	14
3	708880 (Ø77x20)	14
4	980151 (Ø16/8.4)	12
5	904133 (M10x80)	28
6	909258 (M8x55)	12
7	909633 (M8)	12
8	910547 (Ø42.4x1200)	4
9	910549 (Ø42.4x286x2042)	6
10	910556 (L 2400)	6
11	910557 (10x45x87)	14
12	910563 (L 2100)	2
13	910564 (L 1100)	4
14	910565 (L 1400)	2
15	910704 (Ø42.4x2600)	2

DET 1

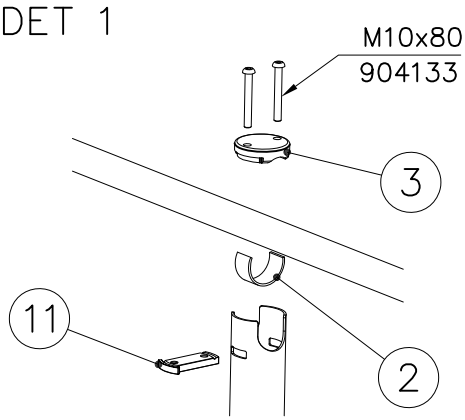

DET 2

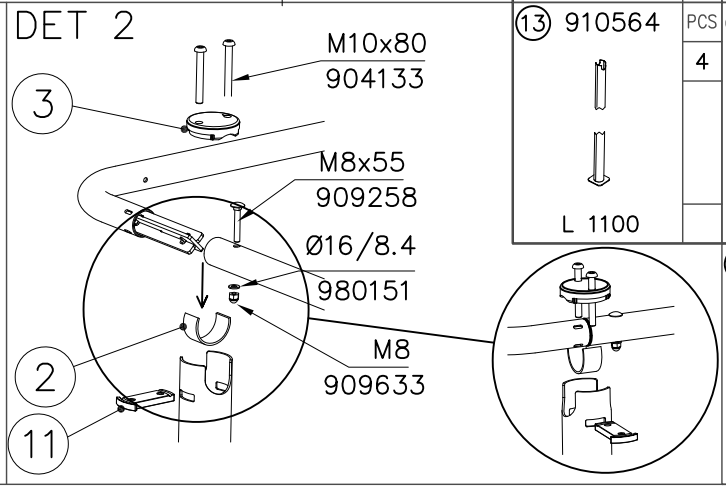

Copyright Lappset Group Ltd

LAPPSET®

081751M

DATE: 17.6.2020

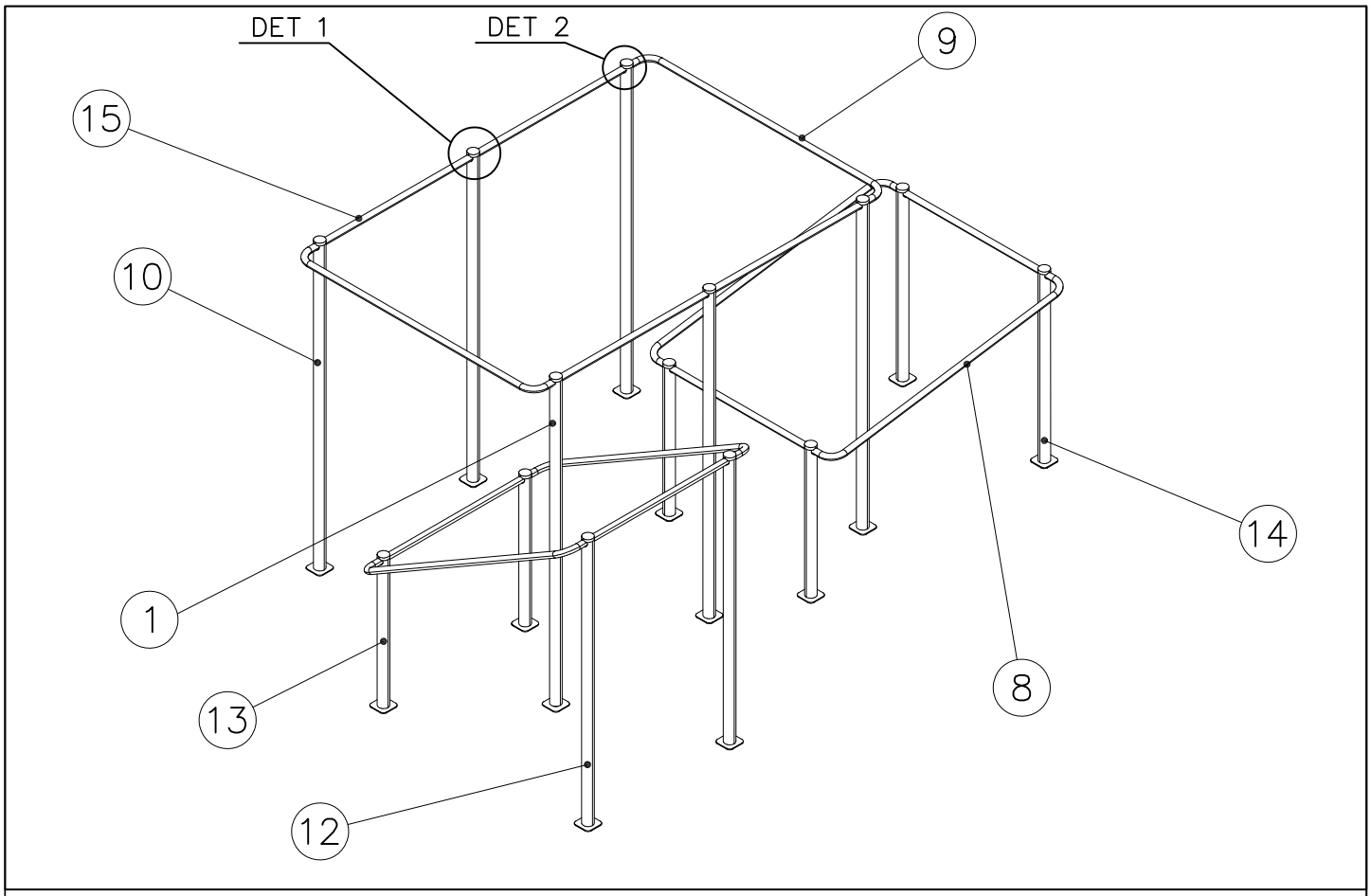

EN Impact Attenuating Surface (IAS) 48.8 m2

Falling Space 48.8 m2

Max Falling Height 2410 mm

1:75

0 3

INSTALLING FOR SURFACE MOUNTING

	PCS
709396	14

FOOT OPTION FOR DEEP MOUNTING

709397+	
910562	PCS
	14
L 600	

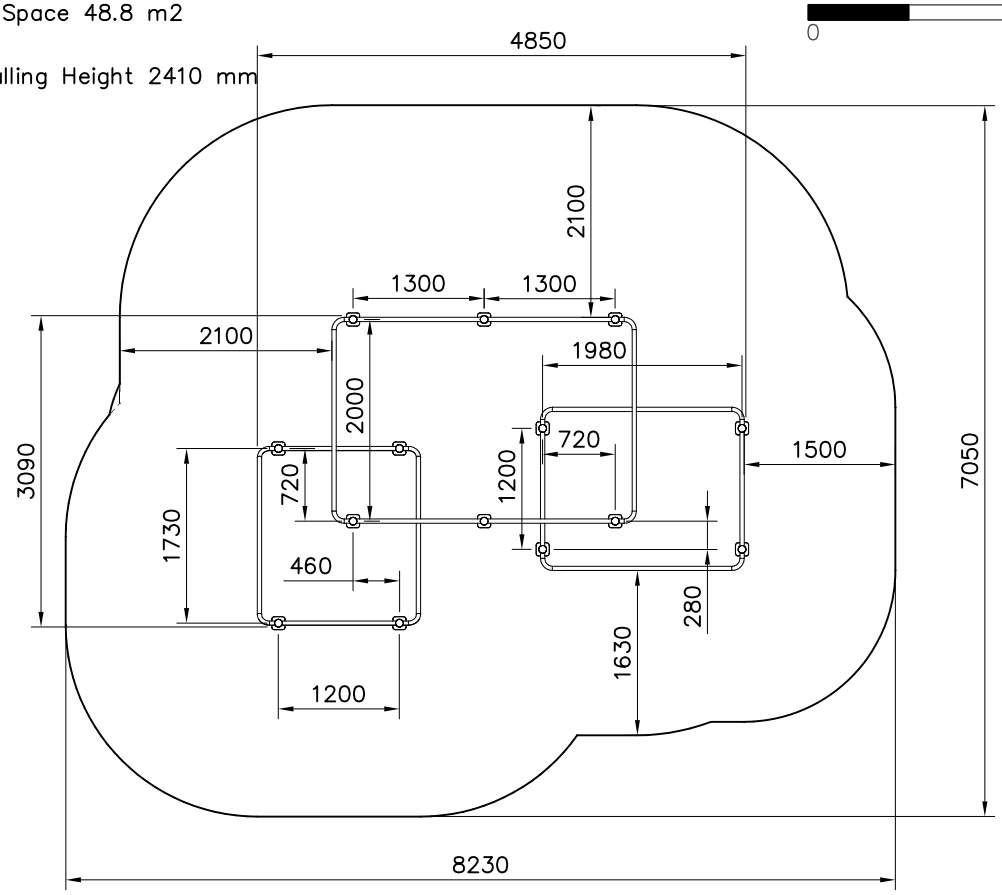

Copyright 1998 Lappset Group Ltd

LAPPSET®

081700M

DATE: 17.2.2020

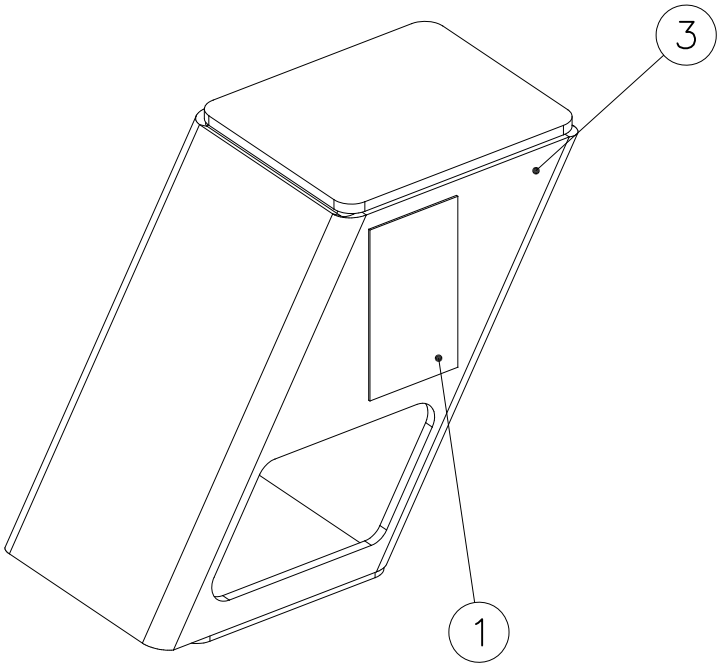

		PCS
1	702341 90x50	1
2	709381 SURFACE	2
3	910219 120x120x200	1

FOOT OPTION FOR DEEP MOUNTING

		PCS
	709379+ 902564 L 550	1

1:50

0 2

---- Falling Space 8.2 m2

Max Falling Height 200 mm

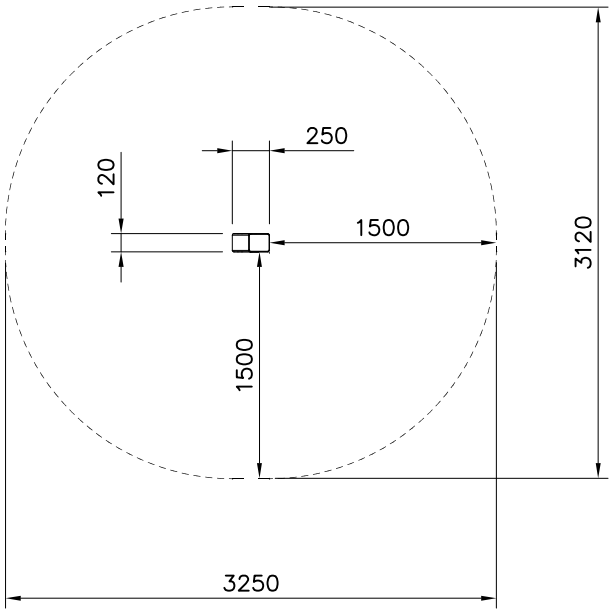

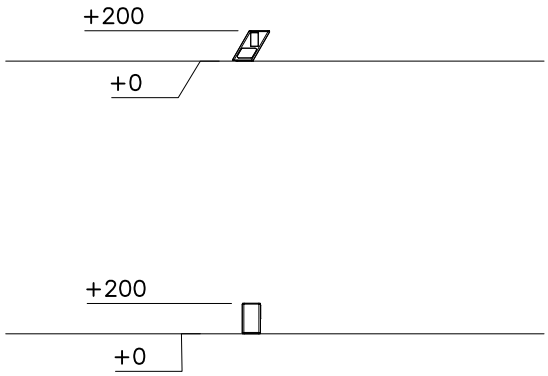

Copyright Lappset Group Ltd

LAPPSET®

081700M

DATE: 17.2.2020

Shadow lines

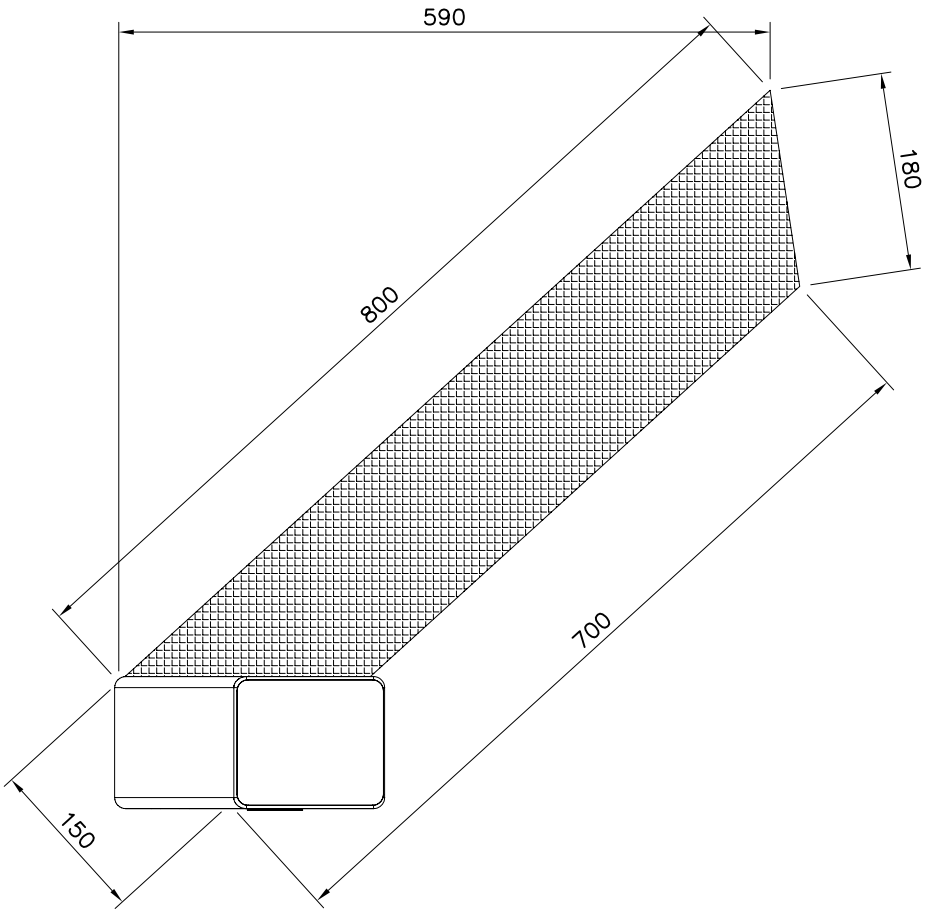

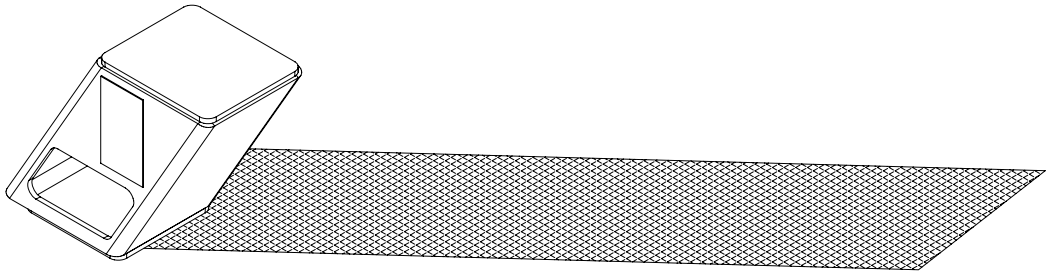

Copyright Lappset Group Ltd

LAPPSET®

081701M

DATE: 9.8.2019

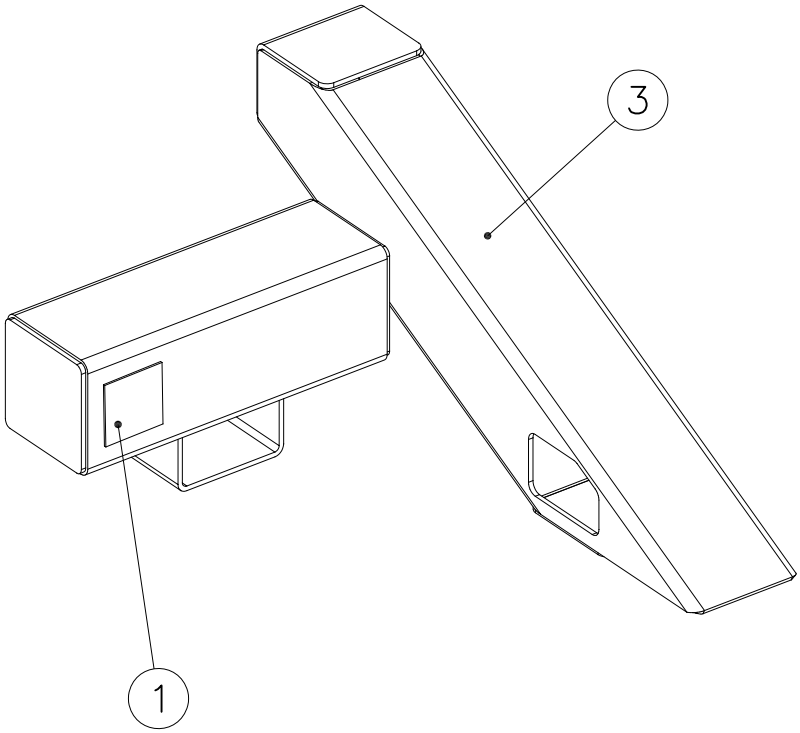

		PCS
1 702341	90x50	1
2 709381	SURFACE	2
3 910220	300x470x662	1

FOOT OPTION FOR DEEP MOUNTING

		PCS
709379+ 902564	L 550	2

1:50

0 2

---- Falling Space 10.8 m2

Max Falling Height 300 mm

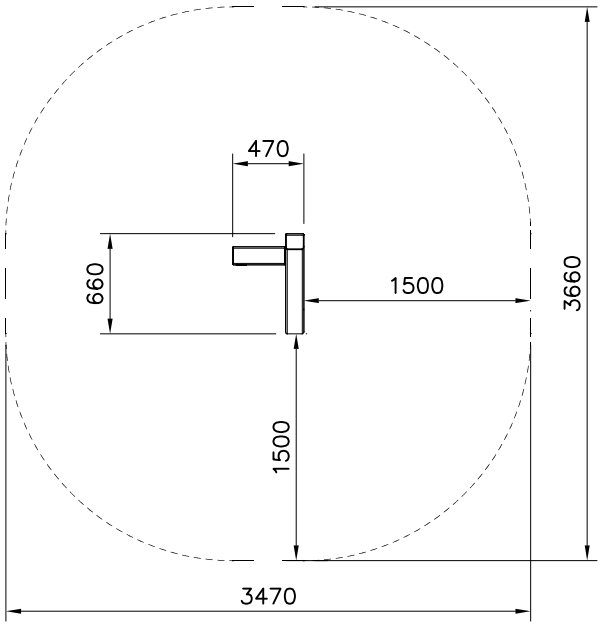

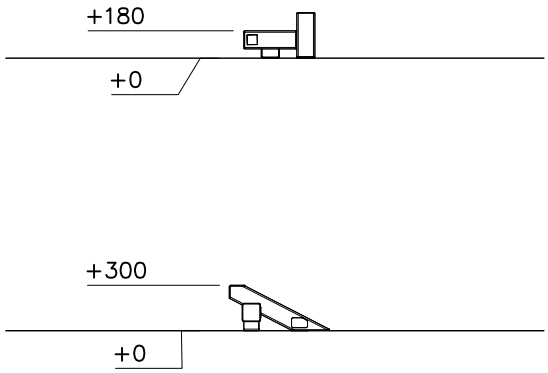

Copyright Lappset Group Ltd

LAPPSET®

081711M

DATE: 23.8.2019

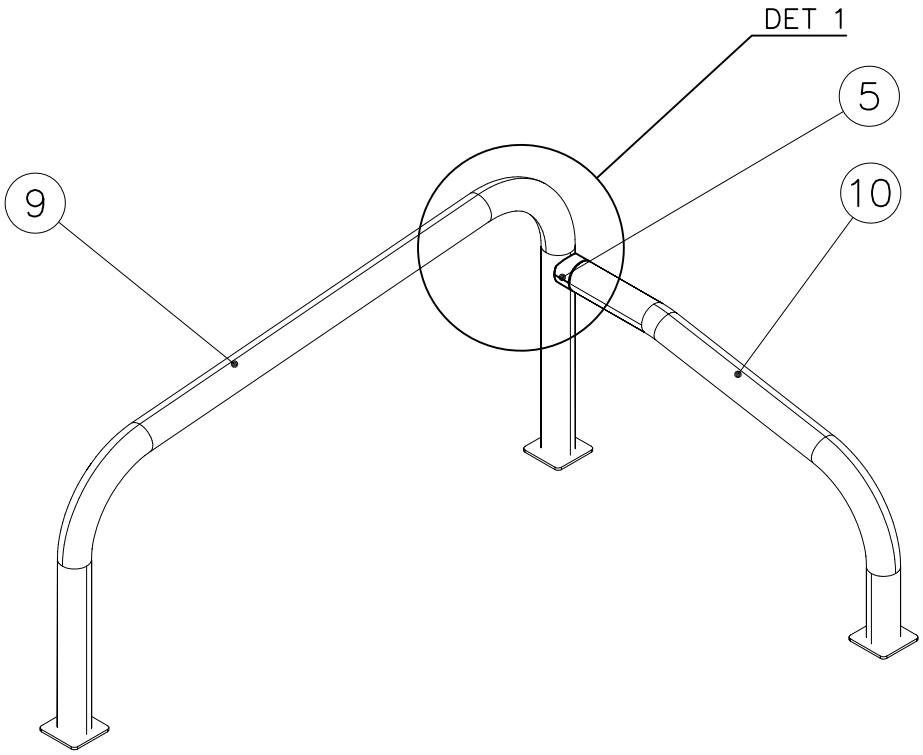

		PCS
1	702341 (90x50)	1
2	900965 (M10)	1
3	903533 (SRL12)	4
4	904133 (M10x80)	1
5	908069 (Ø60x87.6)	1
6	909111 (M12x100)	1
7	909248 (M12)	1
8	909638 (Ø20/10.5)	4
9	910254 (Ø60x650x1290)	1
10	910262 (Ø60x435x795)	1
11	980154 (Ø24/13)	1

OPTION LEFT–HANDED

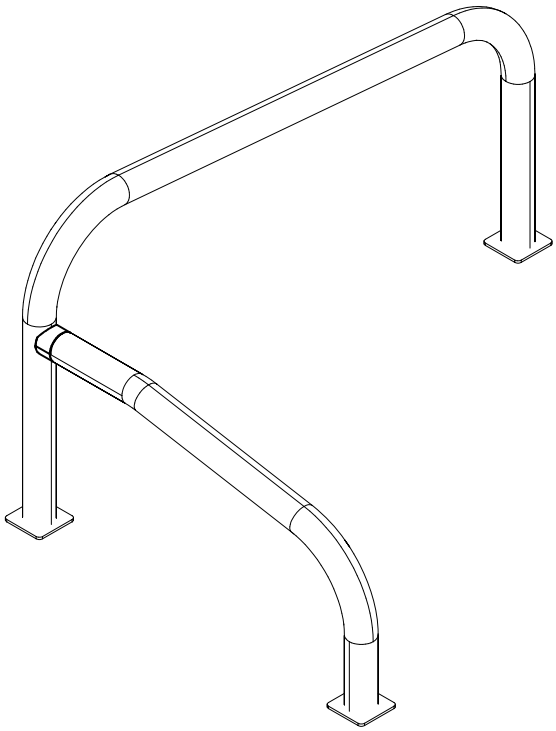

FOOT OPTION FOR DEEP MOUNTING

709379+

		PCS
○	902564 (L 550)	3

Copyright Lappset Group Ltd

LAPPSET®

081711M

DATE: 23.8.2019

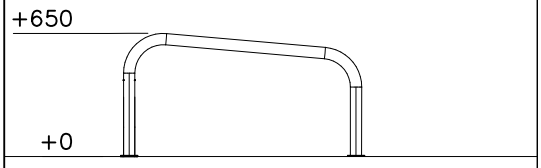

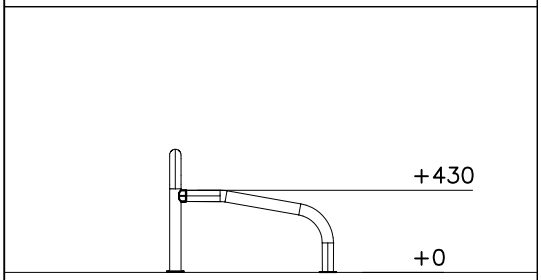

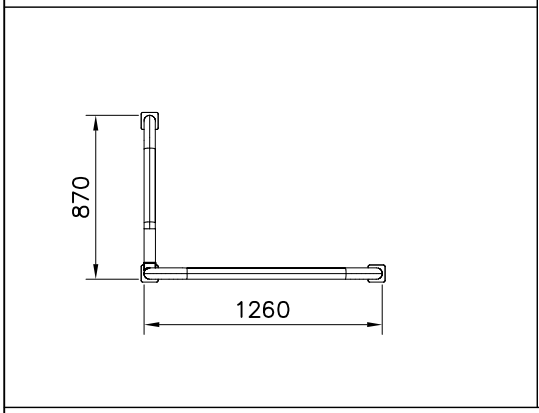

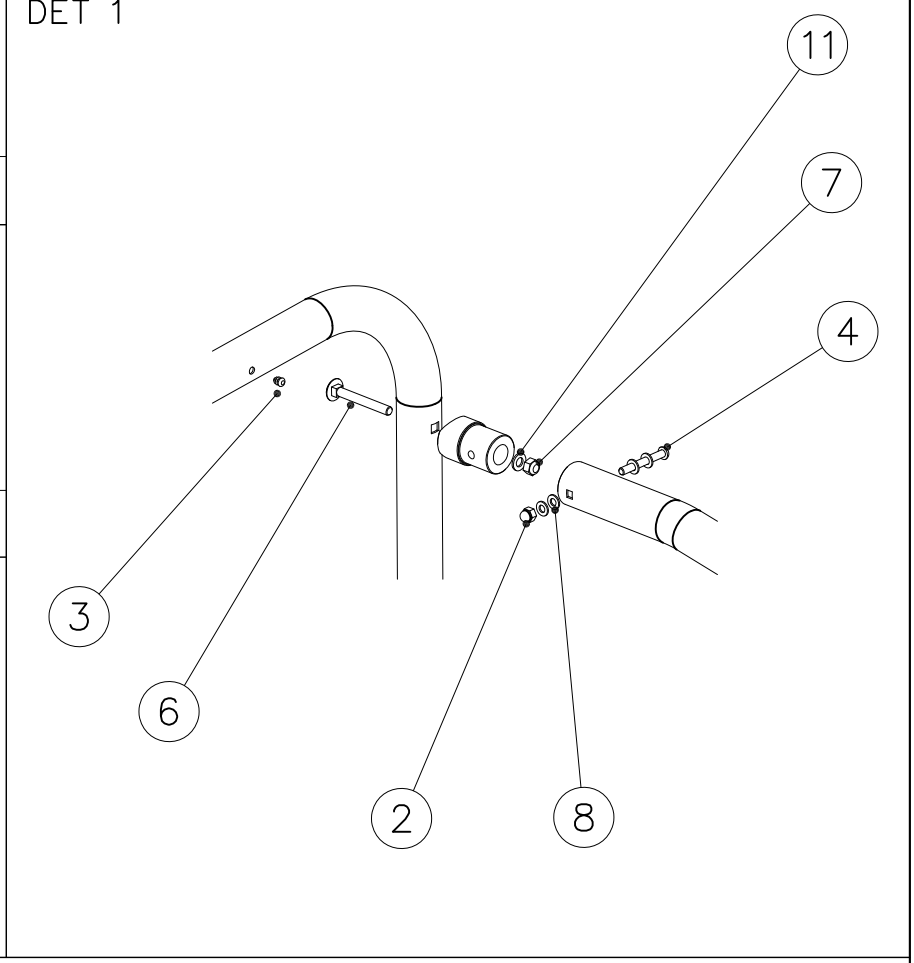

---- Falling Space 13.1 m2

Max Falling Height 650 mm

1:50

0 2

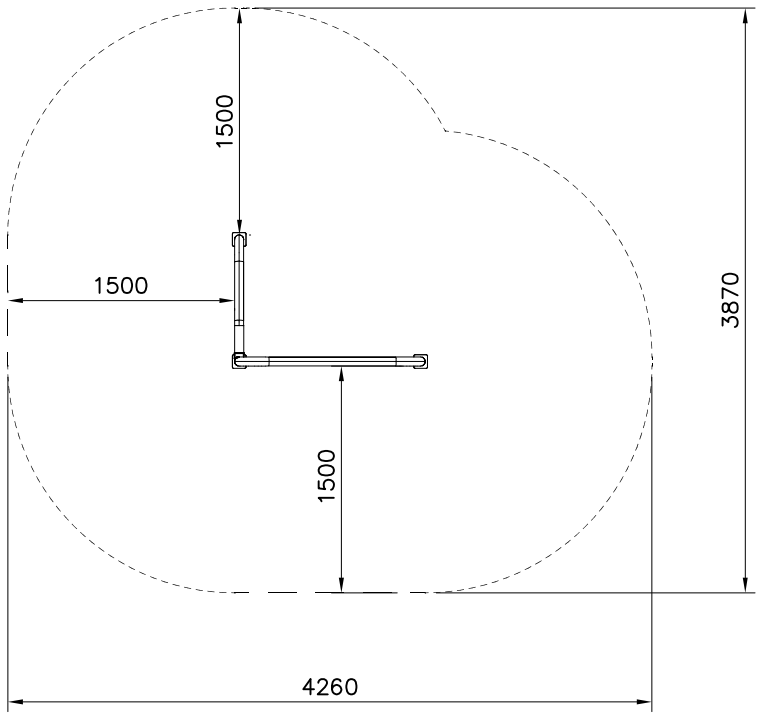

Copyright 1998 Lappset Group Ltd

LAPPSET®

081712M

DATE: 18.6.2019

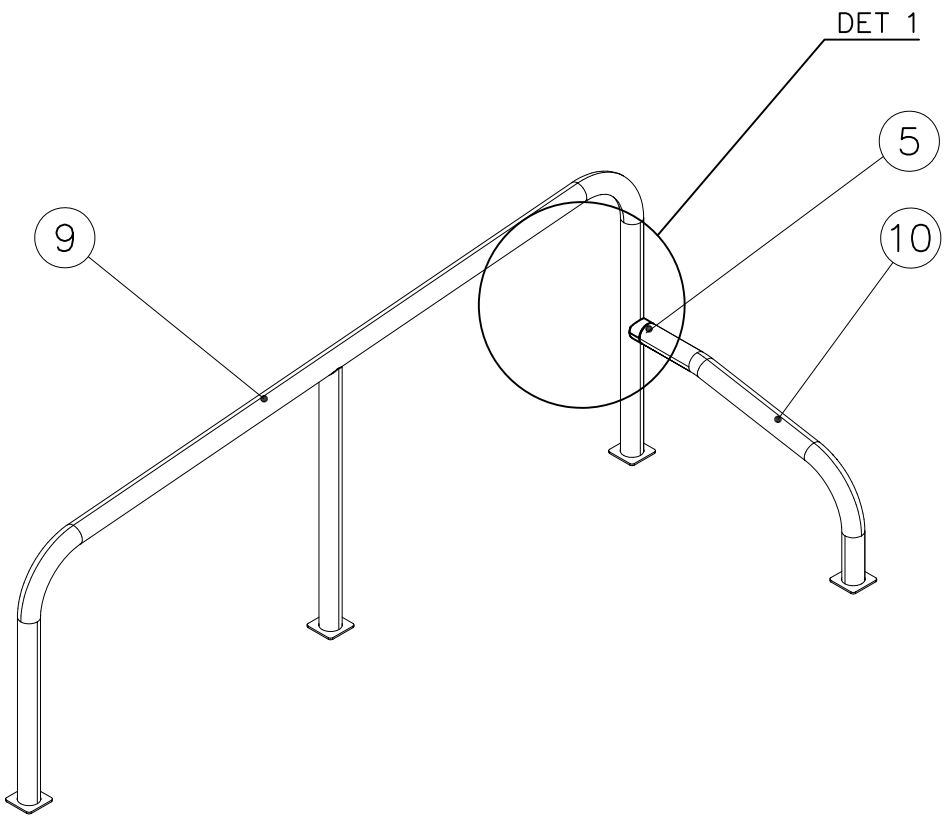

		PCS
1	702341 90x50	1
2	900965 M10	1
3	903533 SRL12	4
4	904133 M10x80	1
5	908069 Ø60x87.6	1
6	909111 M12x100	1
7	909248 M12	1
8	909638 Ø20/10.5	4
9	910255 Ø60x950x2290	1
10	910262 Ø60x435x795	1
11	980154 Ø24/13	1

OPTION LEFT-HANDED

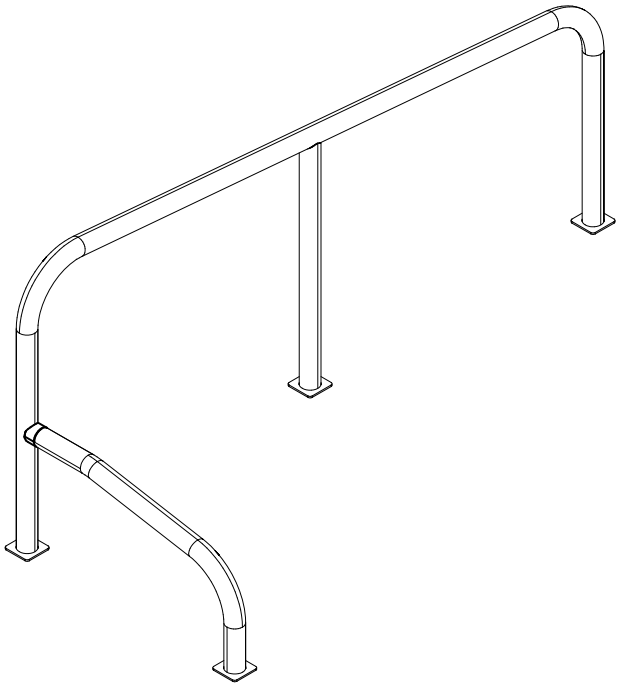

Copyright Lappset Group Ltd

LAPPSET®

081712M

DATE: 18.6.2019

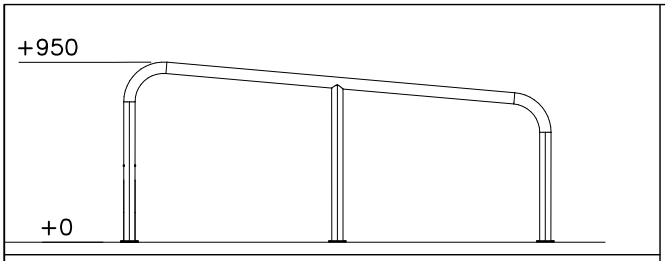

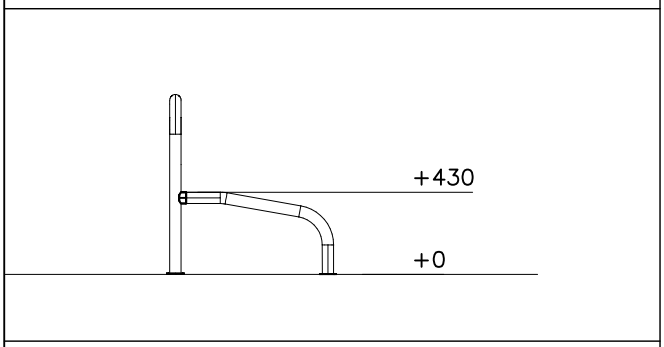

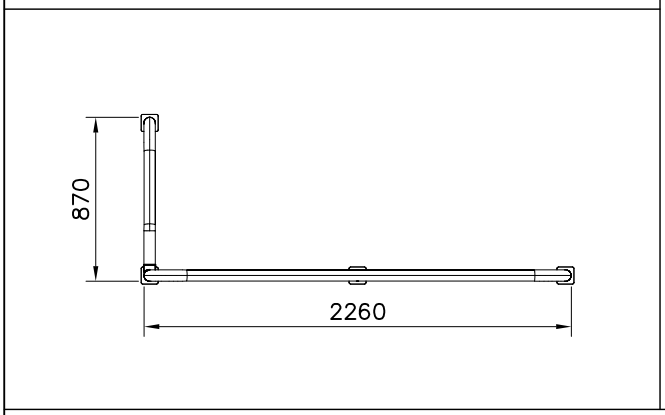

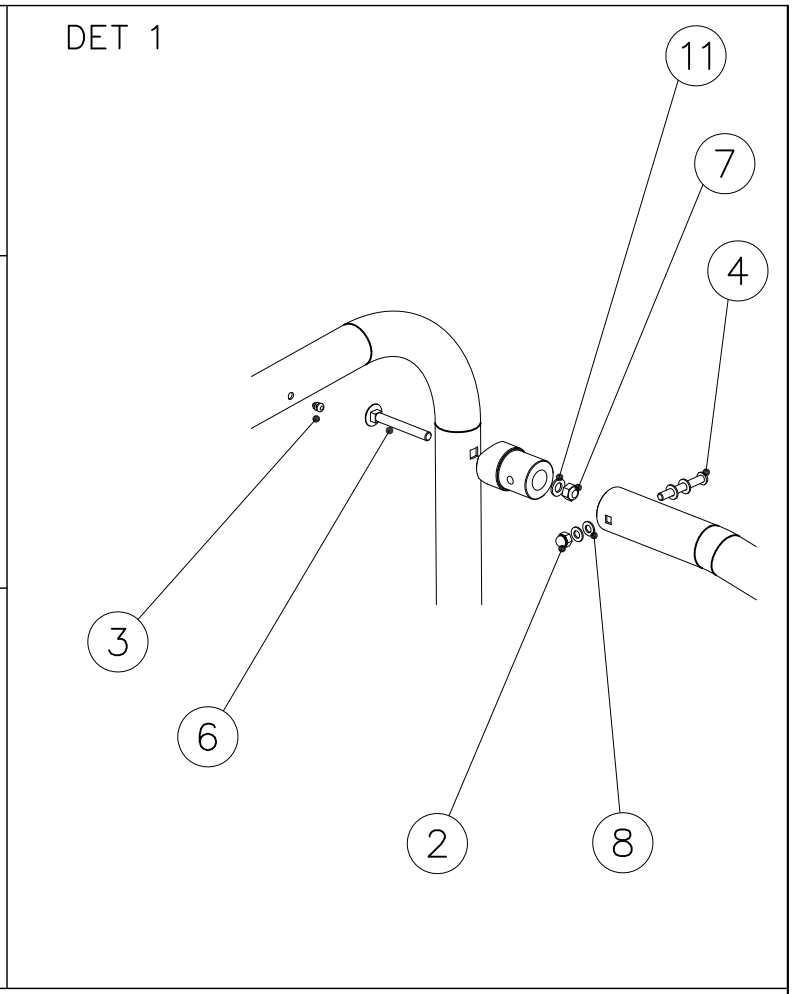

1:50

0 2

---- Falling Space 16.2 m2

Max Falling Height 950 mm

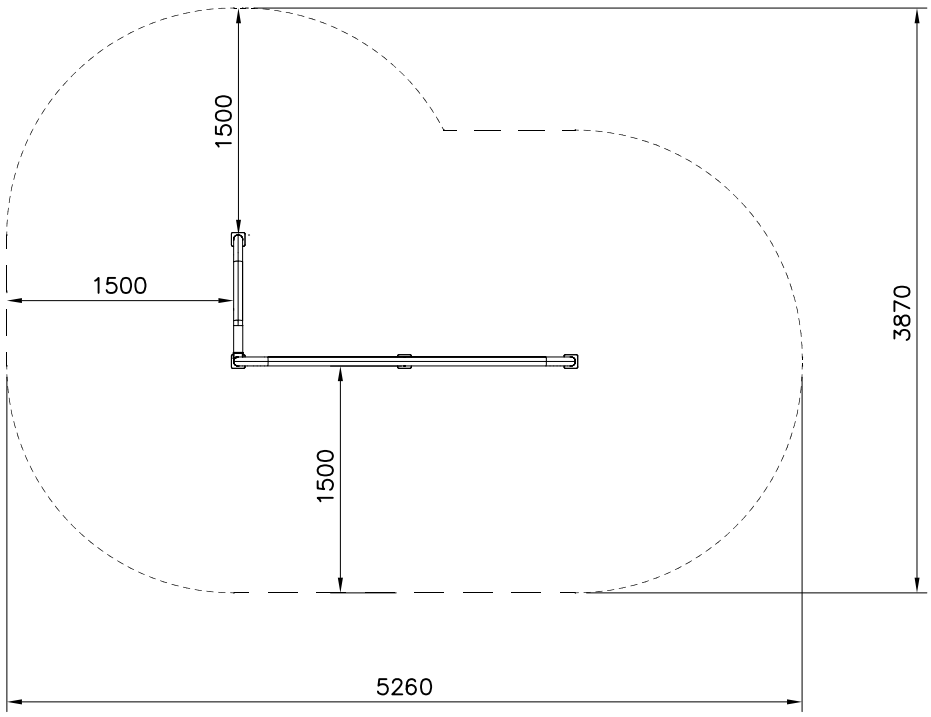

Copyright 1998 Lappset Group Ltd

LAPPSET®

081713M

DATE: 8.8.2019

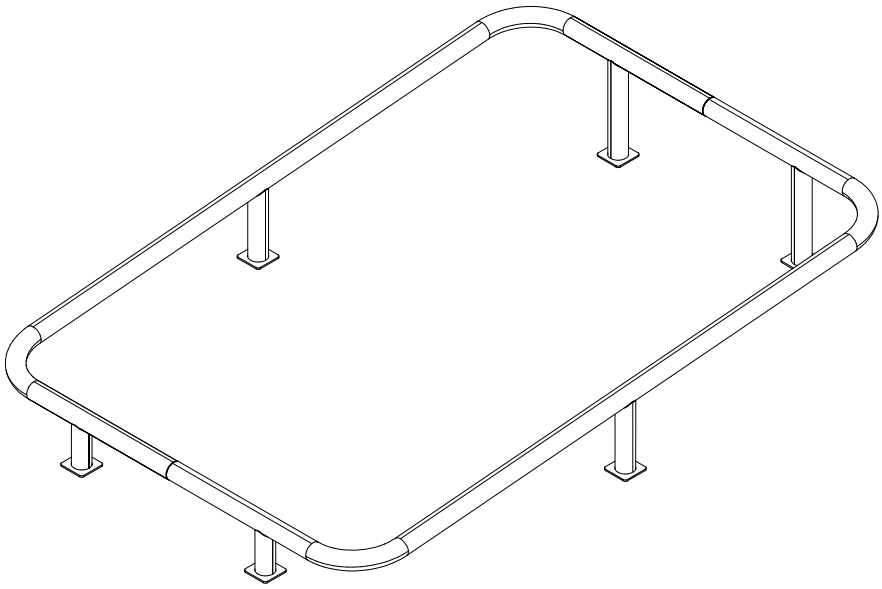

		PCS
1	900965 M10	4
2	903533 SRL12	8
3	904133 M10x80	4
4	909638 Ø20/10.5	8
5	910052 53x53x120	2
6	910054 390x780x2282	1
7	910055 390x780x2282	1
8	702341 90x50	1

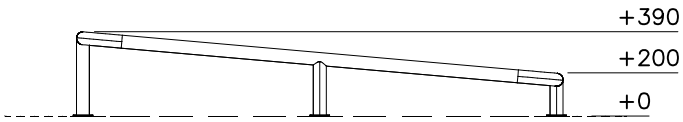

DET 1

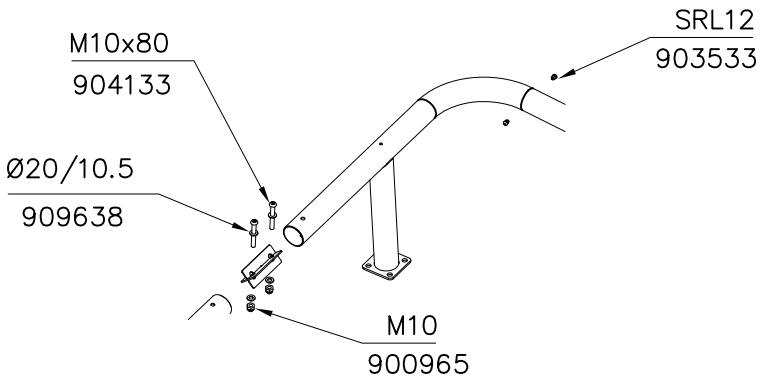

Copyright Lappset Group Ltd

LAPPSET®

081713M

DATE: 8.8.2019

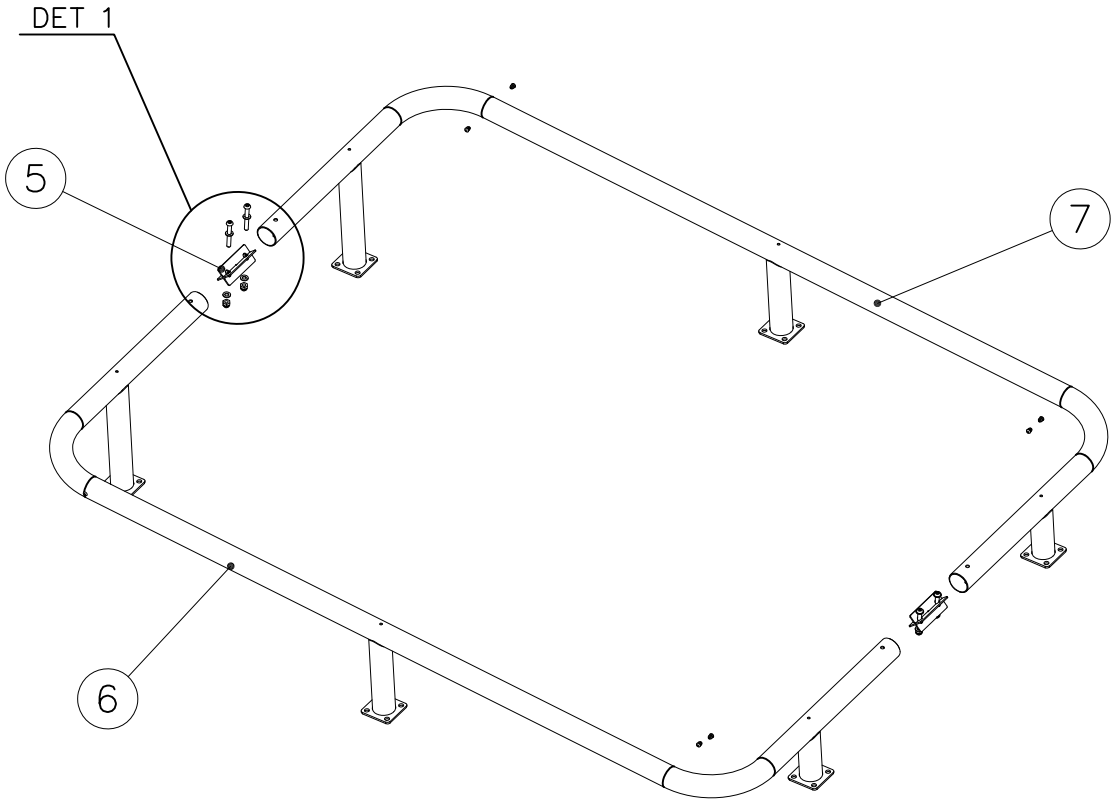

---- Falling Space 22 m2
Max Falling Height 390 mm

1:50
0 2

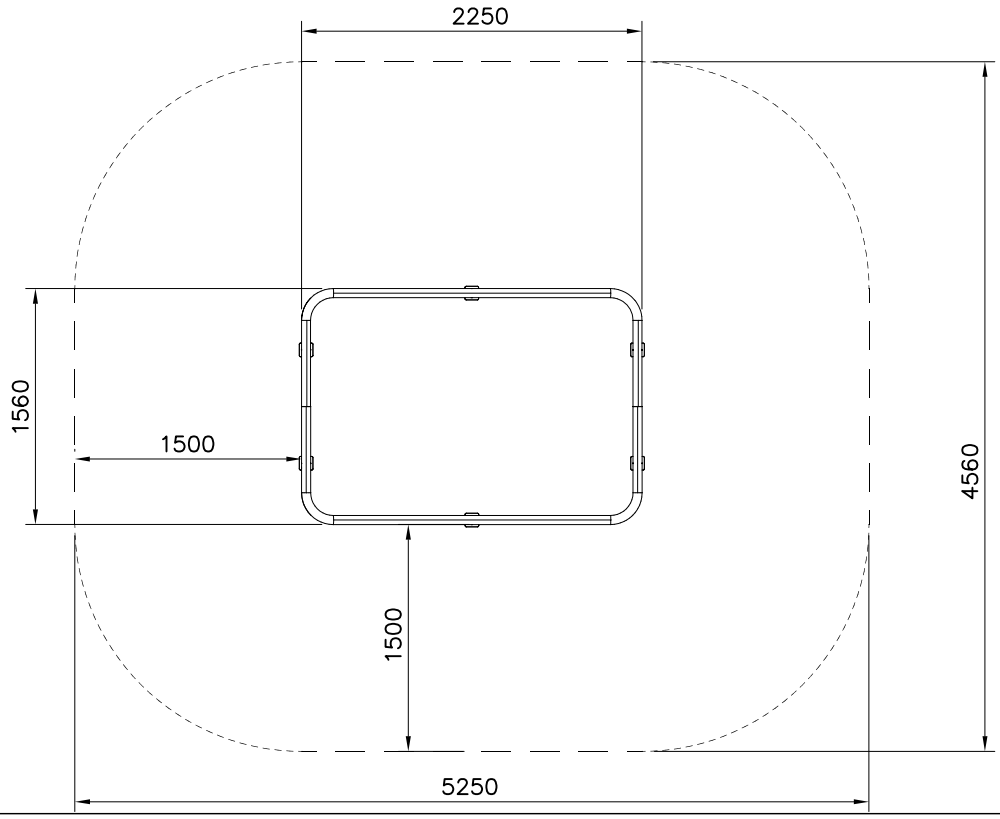

Copyright 1998 Lappset Group Ltd

LAPPSET®

081720M

DATE: 5.9.2019

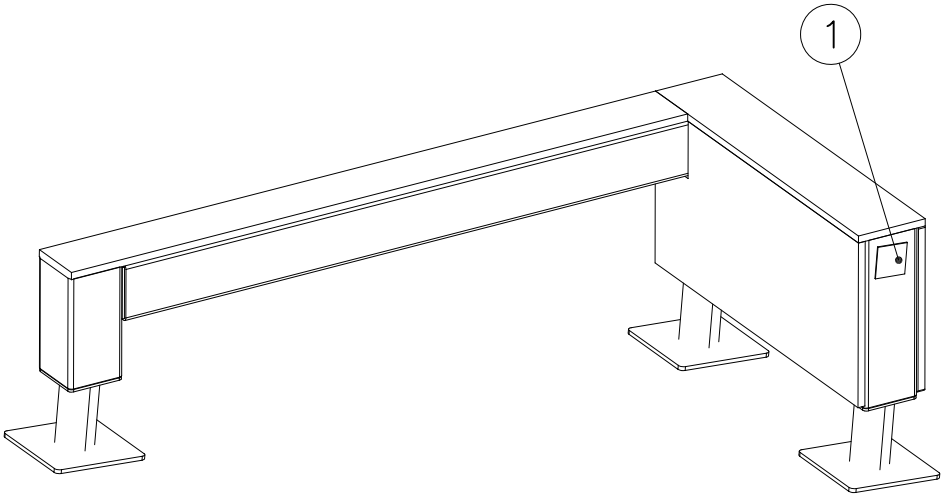

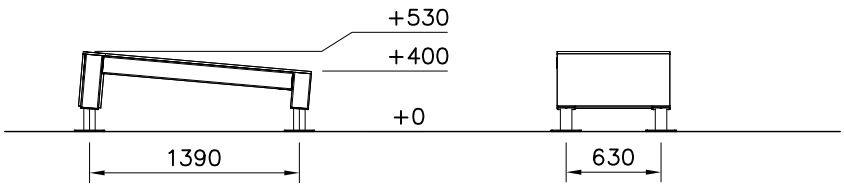

INSTALLATION OF A SECOND HAND

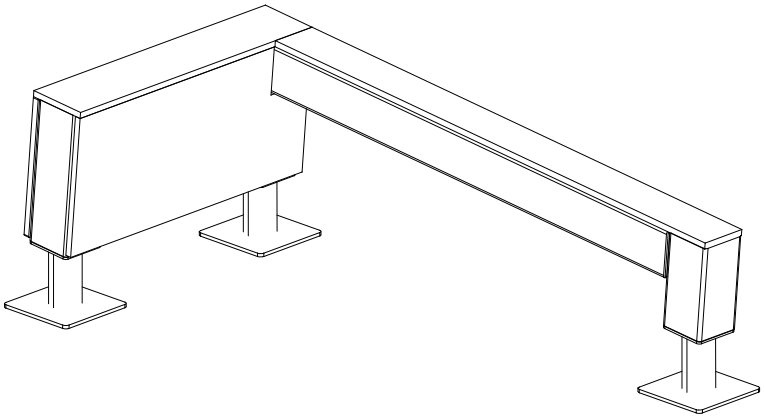

		PCS			PCS
1	702286	1	2	707210	2
	65x65			118x118x503	
3	707212	1	4	708347	1
	118x118x1254			118x118x231	
5	708443	2	6	708727	1
	118x118x352			15x346x745	
7	708730	1	8	708733	1
	15x346x745			15x148x745	
9	708734	1	10	708857 JIG	1
	15x118x1365			20x133x149	
11	910266	2	12	900240	16
	90x108x118			Ø8x70	
13	903093	4	14	905103	2
	Ø8x90			PT-28/32-H	
15	905112	4	16	908698	4
	Ø22			3x114x108	

Copyright Lappset Group Ltd

LAPPSET®

081720M

DATE: 5.9.2019

17 980100	PCS	18 980114	PCS	19 980123	PCS
	28		4		25
Ø5x60		Ø4x20		Ø7x60	

FOOT OPTIONS

709261+		709262+	
910267 SURFACE	PCS 3	910567 CONCRETE	PCS 3
152x200x200		117x117x715	

---- Falling Space 13.8 m2

Max Falling Height 530 mm

1:50

0 2

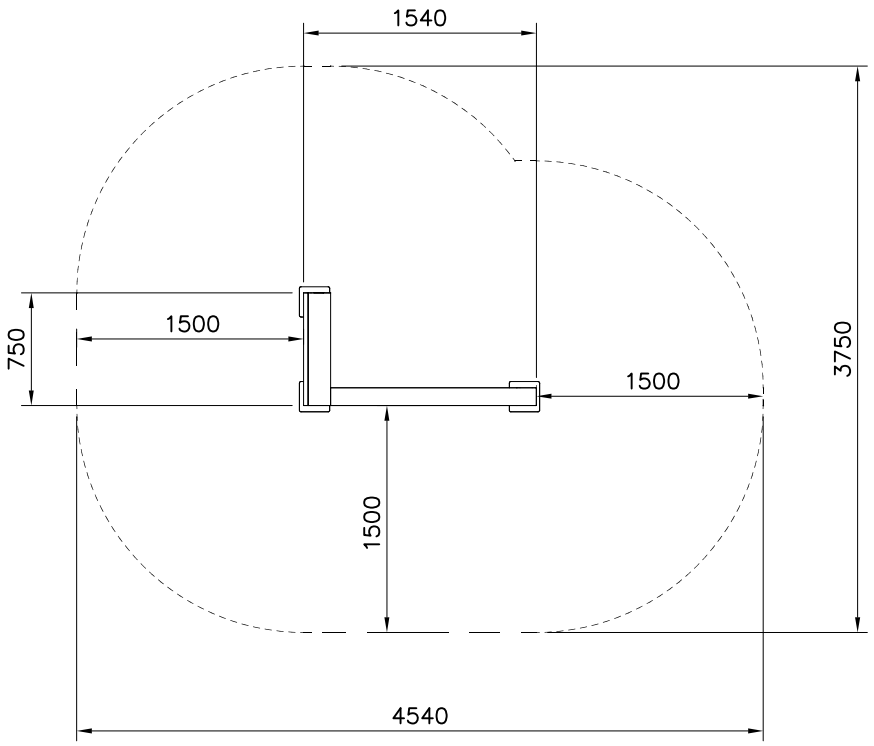

Copyright Lappset Group Ltd

LAPPSET®

081720M

FLORA

DATE: 5.9.2019

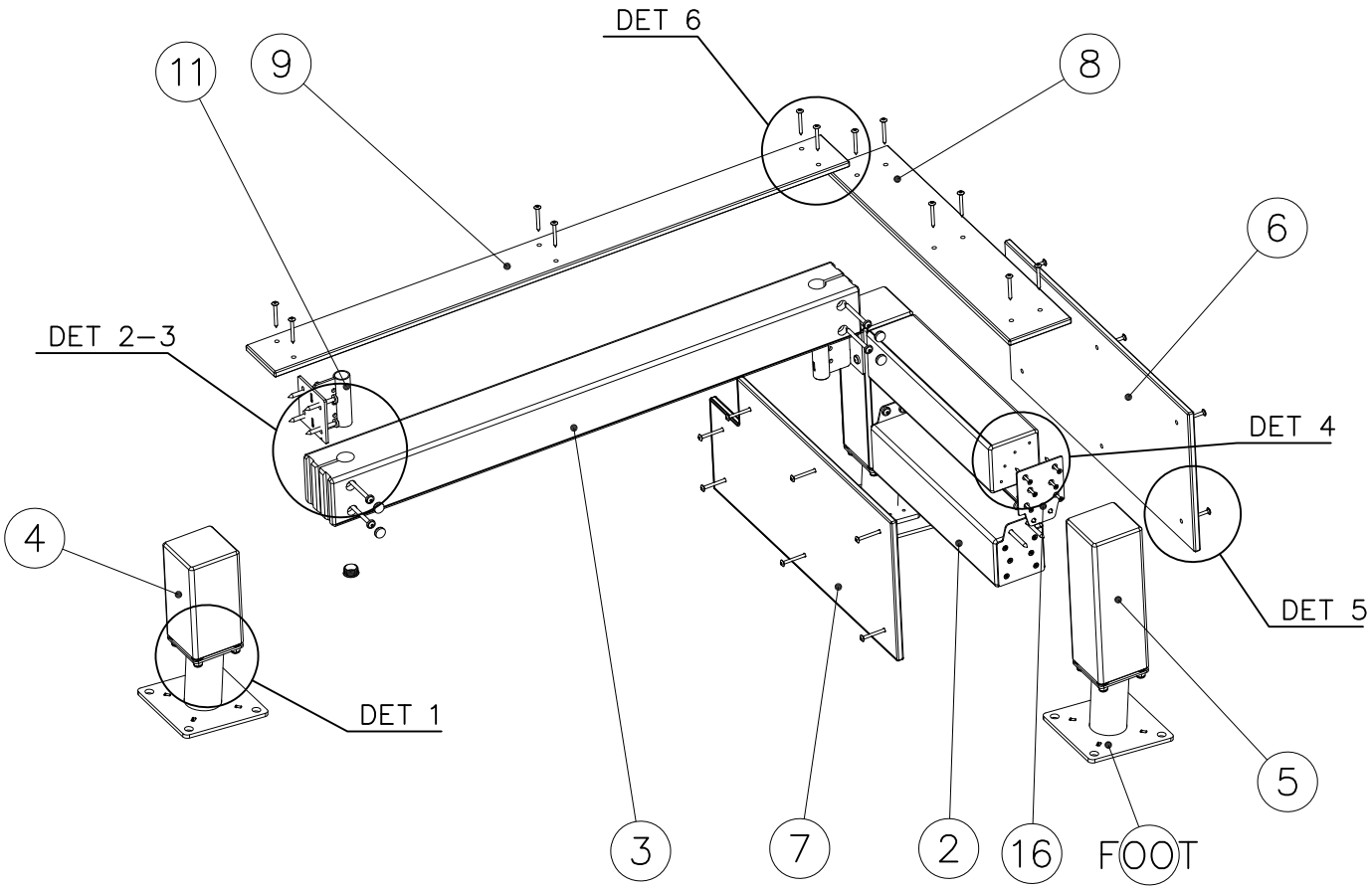

Copyright 1998 Lappset Group Ltd

LAPPSET®

081720M

DATE: 5.9.2019

DET 1

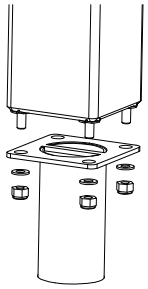

DET 2

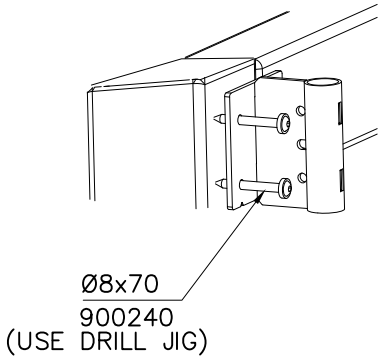

DET 3

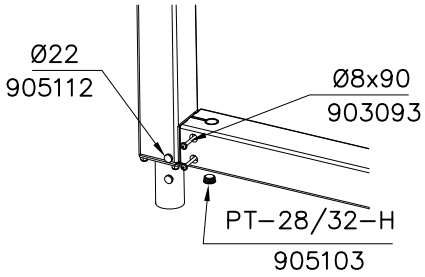

DET 4

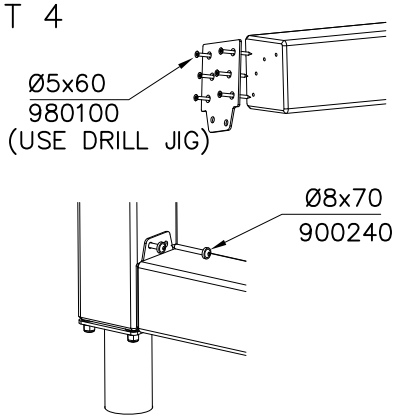

DET 5

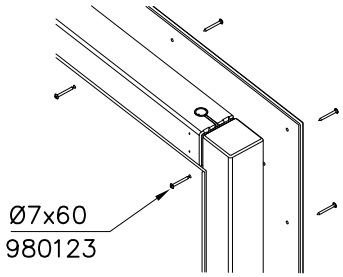

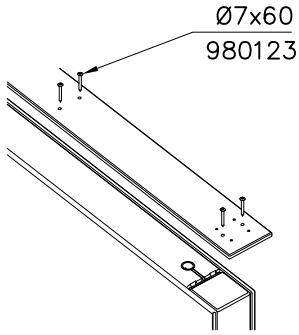

JIG DET A (USE DET 2–4)

NOTE:
Use drill jig 708857
to predrill Ø5↧50
holes for 910266
and 908698

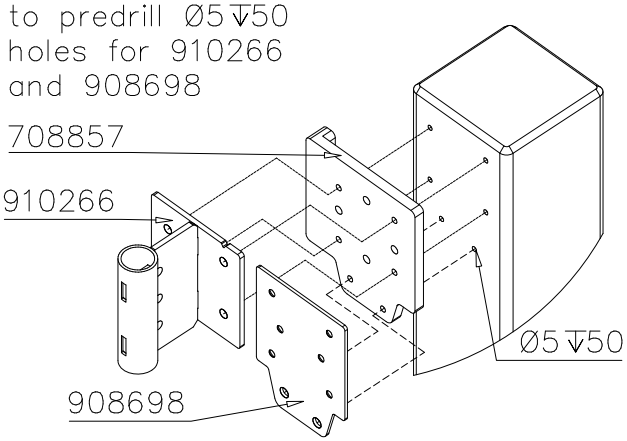

Copyright Lappset Group Ltd

LAPPSET®

081721M

DATE: 10.9.2019

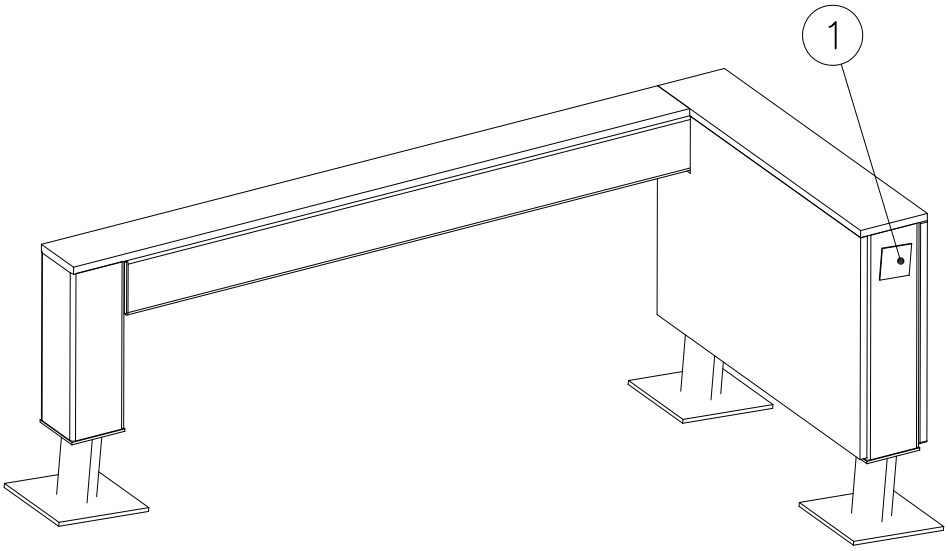

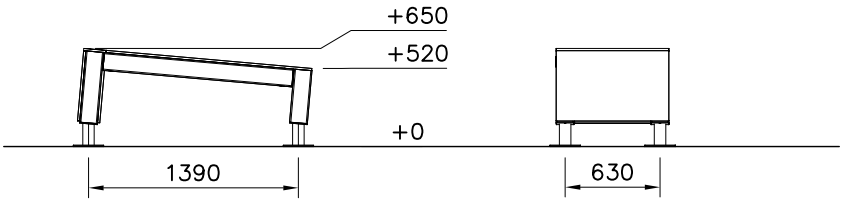

INSTALLATION OF A SECOND HAND

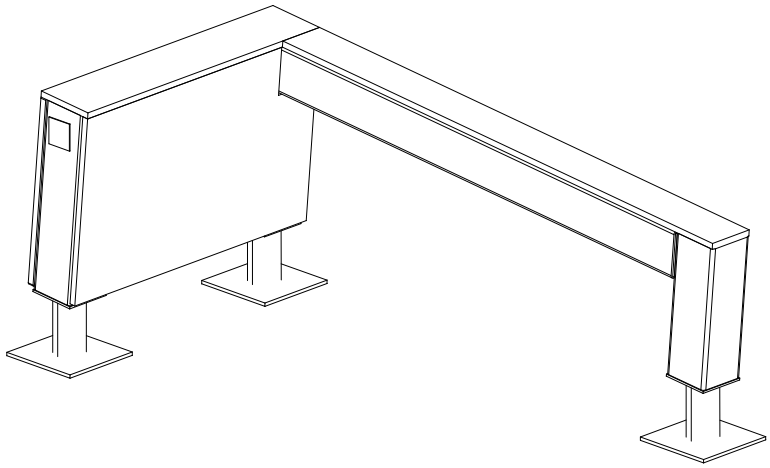

		PCS			PCS
1	702286	1	2	707210	2
	65x65			118x118x503	
3	707212	1	4	707889	2
	118x118x1254			118x118x472	
5	708443	1	6	708733	1
	118x118x352			15x148x745	
7	708734	1	8	708857 JIG	1
	15x118x1365			20x133x149	
9	708731	1	10	900240	16
	15x466x745			Ø8x70	
11	903093	4	12	905103	2
	Ø8x90			PT-28/32-H	
13	905112	4	14	908698	4
	Ø22			3x114x108	
15	910266	2	16	708732	1
	90x108x118			15x466x745	

Copyright Lappset Group Ltd

LAPPSET®

081721M

DATE: 10.9.2019

17 980100	PCS	18 980114	PCS	19 980123	PCS
	28		4		25
Ø5x60		Ø4x20		Ø7x60	

FOOT OPTIONS

709261+		709262+	
910267 SURFACE	PCS 3	910567 CONCRETE	PCS 3
152x200x200		117x117x715	

---- Falling Space 13.8 m2
Max Falling Height 650 mm

1:50
0 2

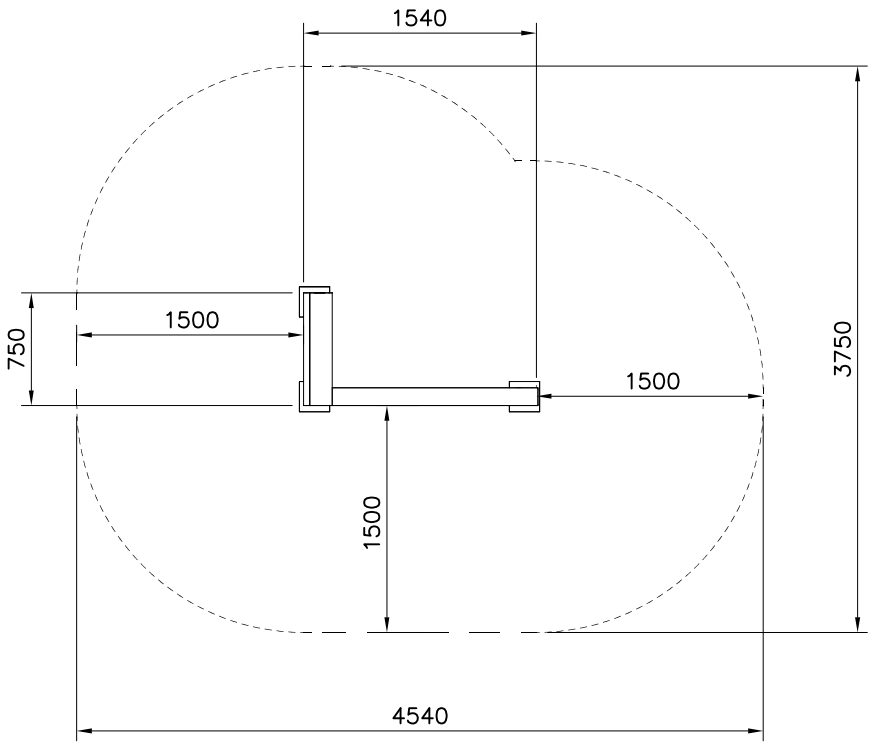

Copyright Lappset Group Ltd

LAPPSET®

081721M

FLORA

DATE: 10.9.2019

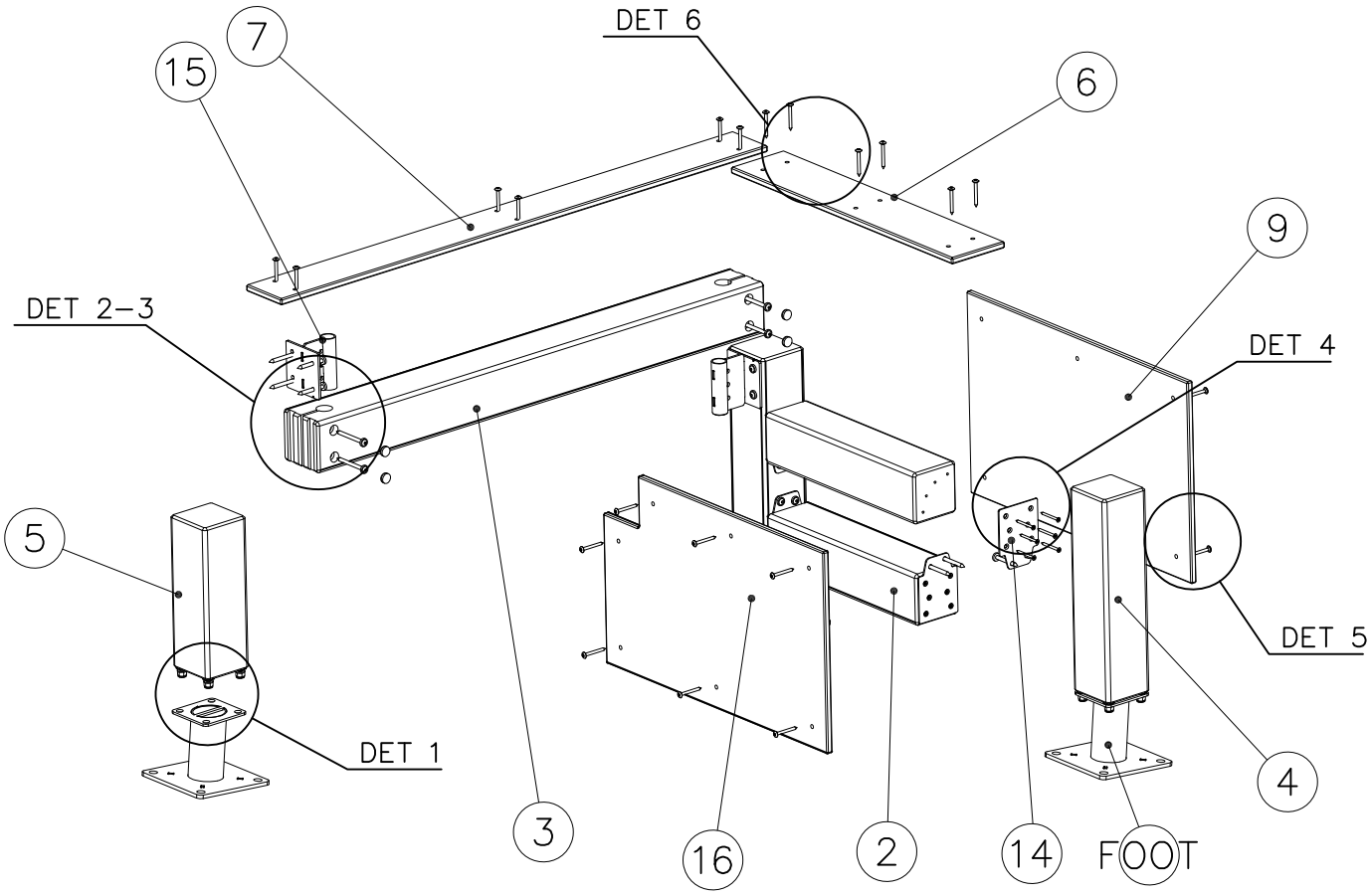

Copyright 1998 Lappset Group Ltd

LAPPSET®

081721M

DATE: 10.9.2019

DET 1

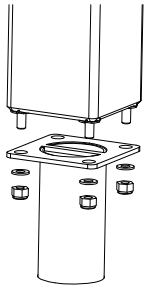

DET 2

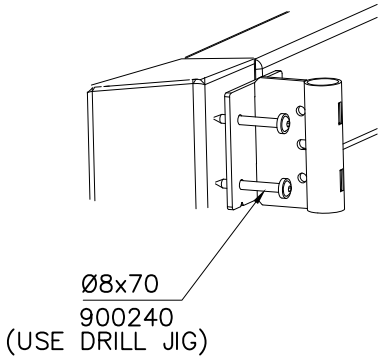

DET 3

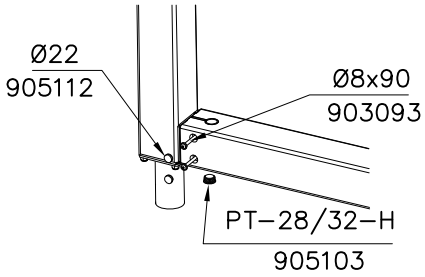

DET 4

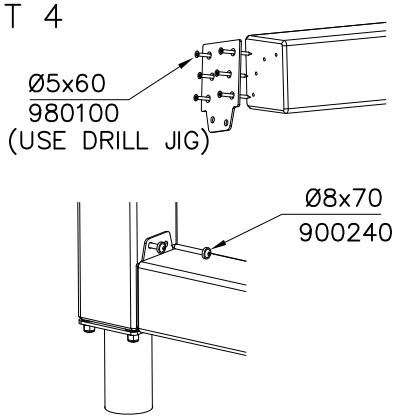

DET 5

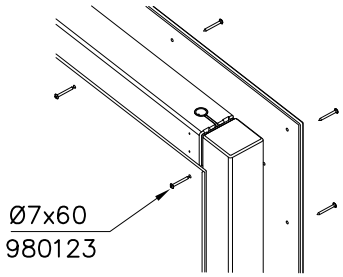

DET 6

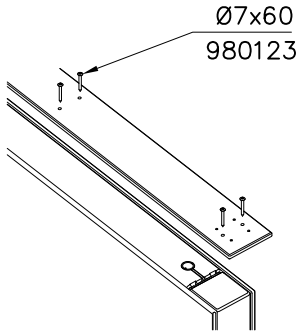

JIG DET A (USE DET 2–4)

NOTE:
Use drill jig 708857
to predrill Ø5↧50
holes for 910266
and 908698

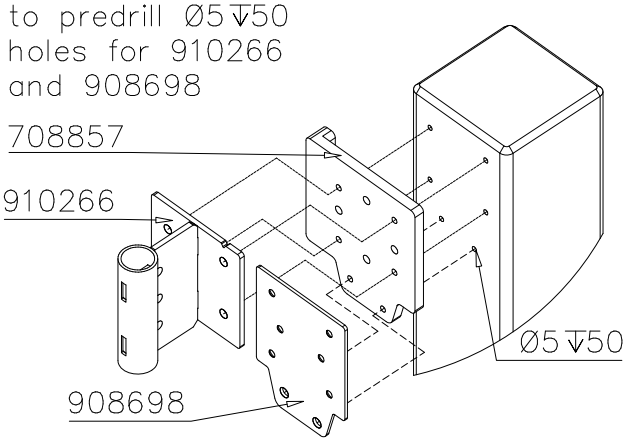

Copyright Lappset Group Ltd

LAPPSET®

081722M

DATE: 20.4.2020

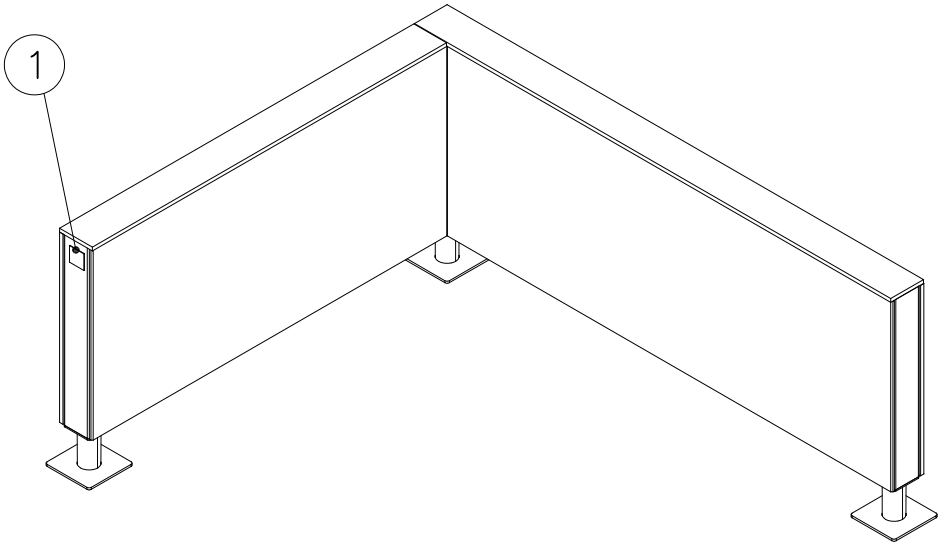

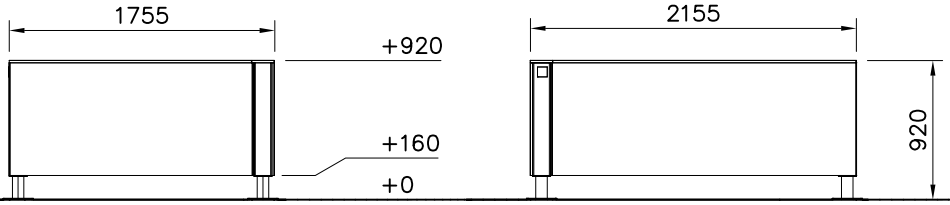

		PCS			PCS
1	702286	1	2	707213	2
	65x65			118x118x1490	
3	707517	2	4	708137	3
	118x118x1892			118x118x745	
5	708715	1	6	708716	1
	15x745x2140			15x745x1753	
7	708737	1	8	708738	1
	15x148x1601			15x148x2153	
9	708857 JIG	1	10	911309 COLOR	1
	20x133x149			12x745x2015	
11	911311 MURAL	1	12	900240	32
	12x745x1610			Ø8x70	

INSTALLATION OF A SECOND HAND

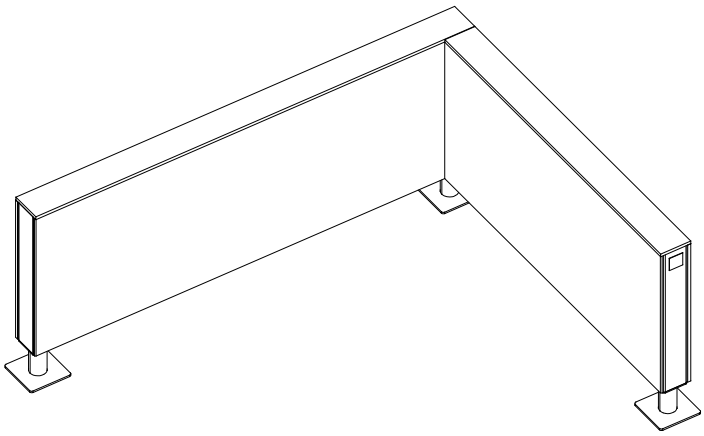

		PCS			PCS			PCS
13	903093	16	14	905103	8	15	905112	16
	Ø8x90			PT-28/32-H			Ø22	
16	910266	8	17	980123	56	18	980114	4
	90x108x118			Ø7x60			Ø4x20	

Copyright Lappset Group Ltd

LAPPSET®

081722M

DATE: 20.4.2020

FOOT OPTIONS

709261+		709262+	
910330	PCS	910567	PCS
SURFACE	3	CONCRETE	3
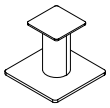			
152x200x200		117x117x715	

---- Falling Space 18.8 m2

Max Falling Height 920 mm

1:50

0 2

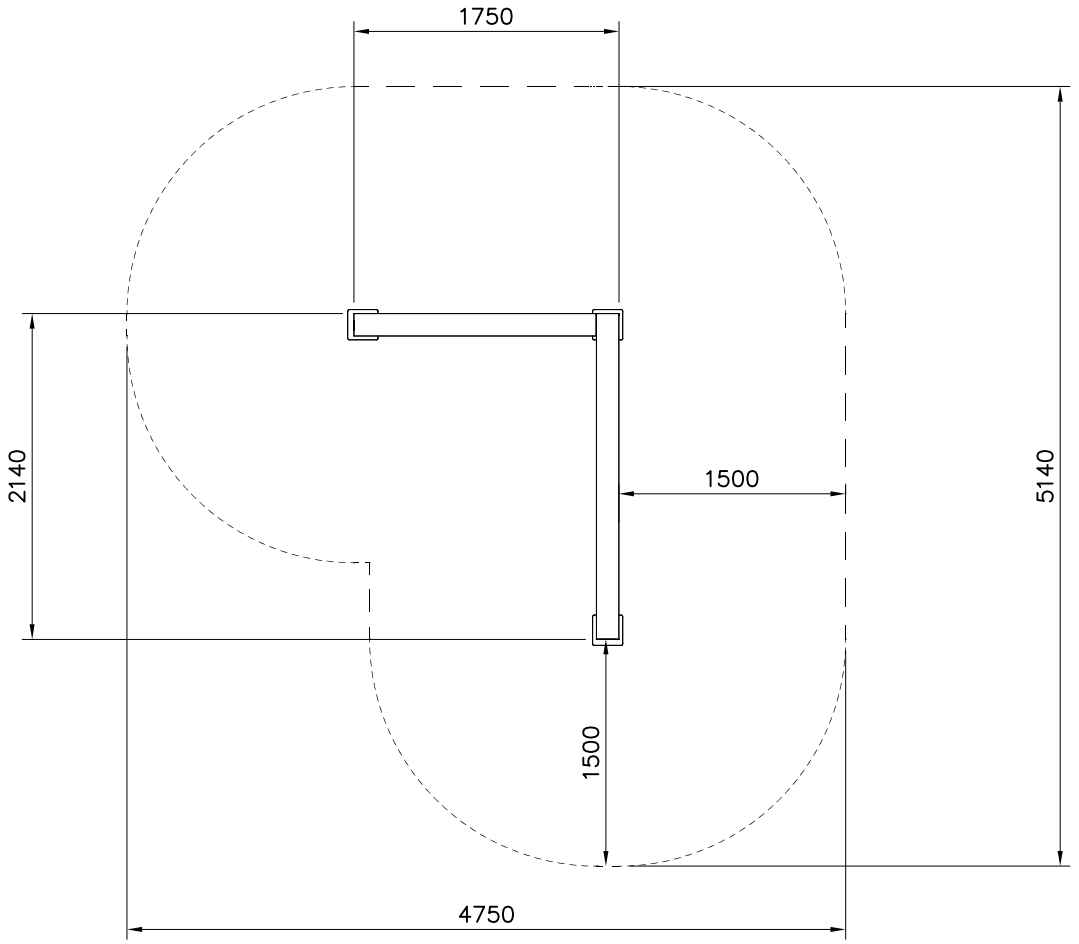

Copyright Lappset Group Ltd

LAPPSET®

081722M

DATE: 20.4.2020

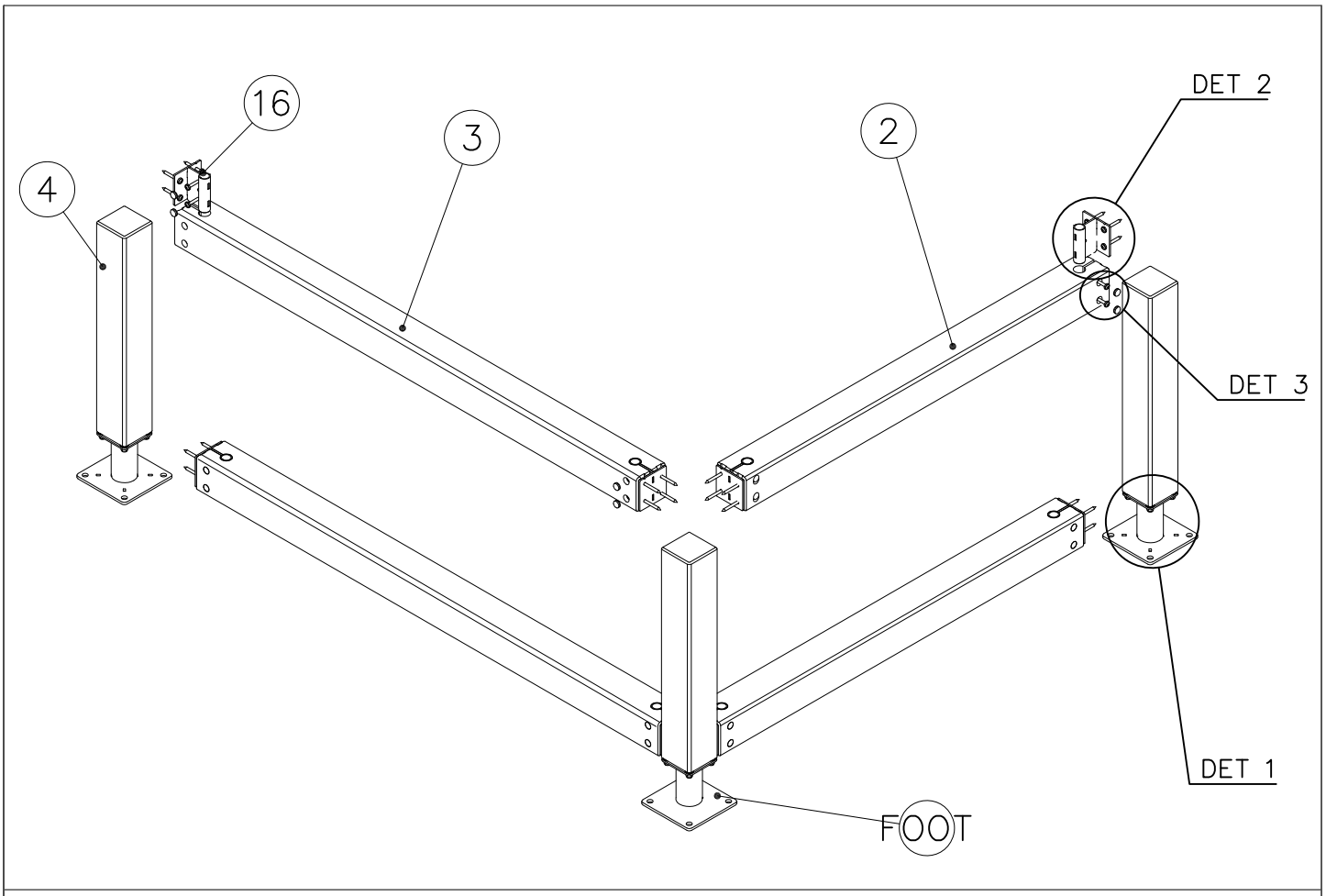

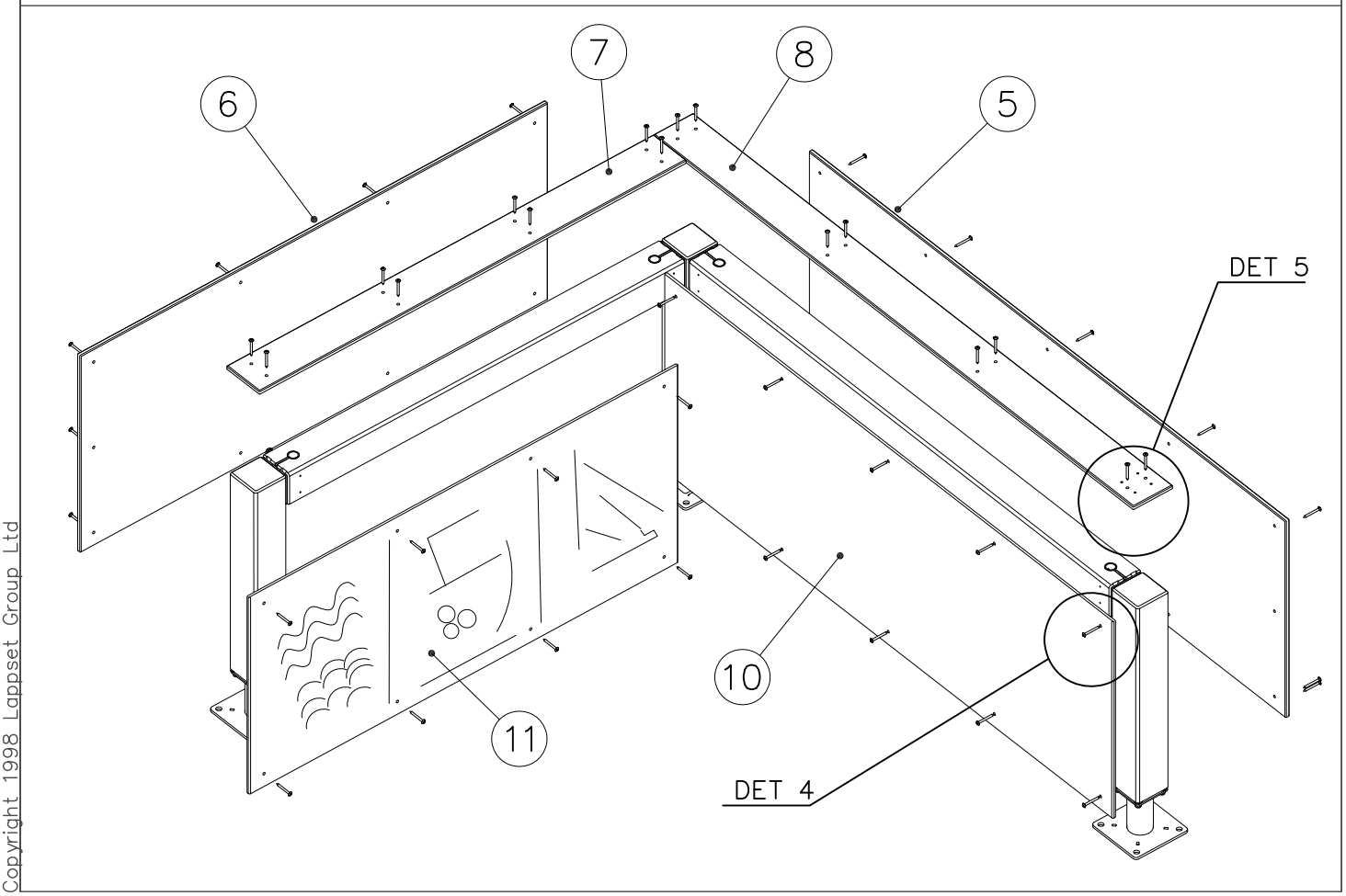

Copyright 1998 Lappset Group Ltd

LAPPSET®

081722M

DATE: 20.4.2020

DET 1

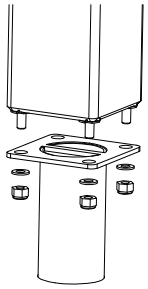

DET 2

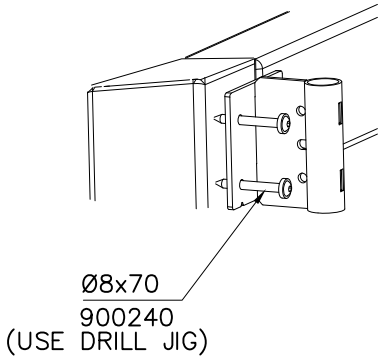

DET 3

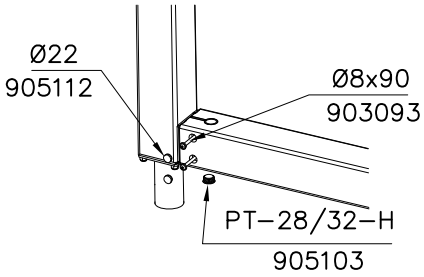

DET 4

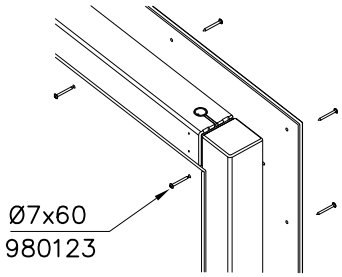

DET 5

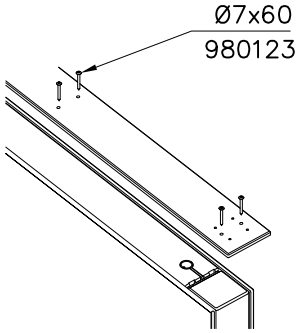

JIG DET A (USE DET 2)

NOTE:
Use drill jig 708857
to predrill Ø5↧50
holes for 910266

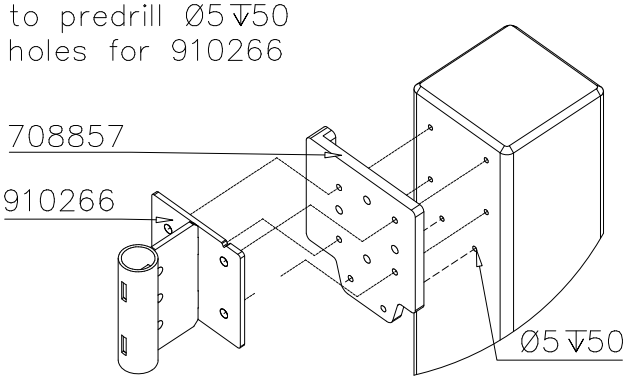

Copyright Lappset Group Ltd

LAPPSET®

081726M

DATE: 20.4.2020

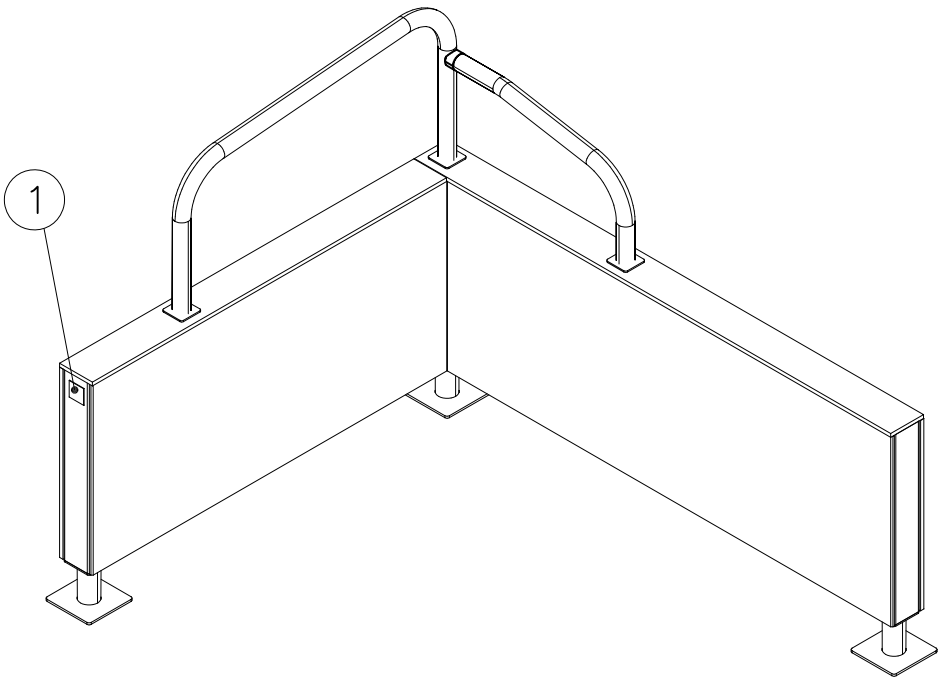

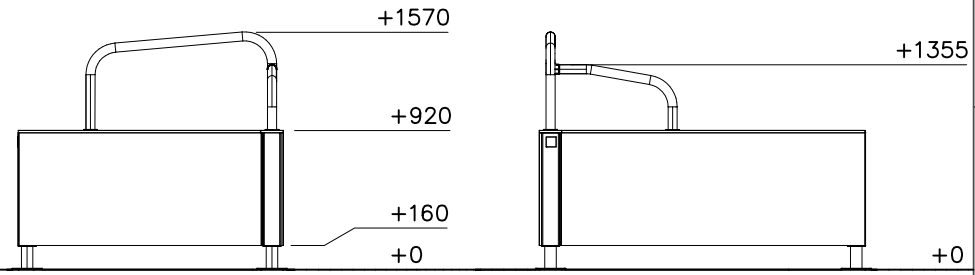

INSTALLATION OF A SECOND HAND

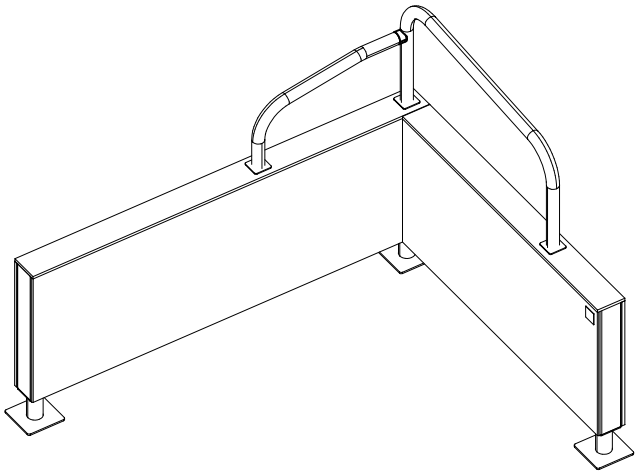

		PCS			PCS
1 702286	65x65	1	2 707213	118x118x1490	2
3 707517	118x118x1892	2	4 708137	118x118x745	3
5 708715	15x745x2140	1	6 708716	15x745x1753	1
7 708737	15x148x1601	1	8 708738	15x148x2153	1
9 708857 JIG	20x133x149	1	10 911309 COLOR	12x745x2015	1
11 911311 MURAL	12x745x1610	1	12 900240	Ø8x70	32
13 903093	Ø8x90	28	14 905103	PT-28/32-H	8
15 905112	Ø22	16	16 910266	90x108x118	8
17 980123	Ø7x60	54			

Copyright Lappset Group Ltd

LAPPSET®

081726M

DATE: 20.4.2020

18	900965	PCS	19	903533	PCS	20	904133	PCS	21	908069	PCS	22	909111	PCS	23	909248	PCS	24	980114	PCS
		1			4			1			1			1			1			4
	M10			SRL12			M10x80			Ø60x87.6			M12x100			M12			Ø4x20	

25	909638	PCS	26	910254	PCS	27	910262	PCS	28	980154	PCS
		4			1			1			1
	Ø20/10.5			Ø60x650x1290			Ø60x435x795			Ø24/13	

FOOT OPTIONS

709261+		709262+	
910330	PCS	910567	PCS
SURFACE	3	CONCRETE	3
152x200x200		117x117x715	

---- Falling Space 18.8 m2

Max Falling Height 1570 mm

1:50

0 2

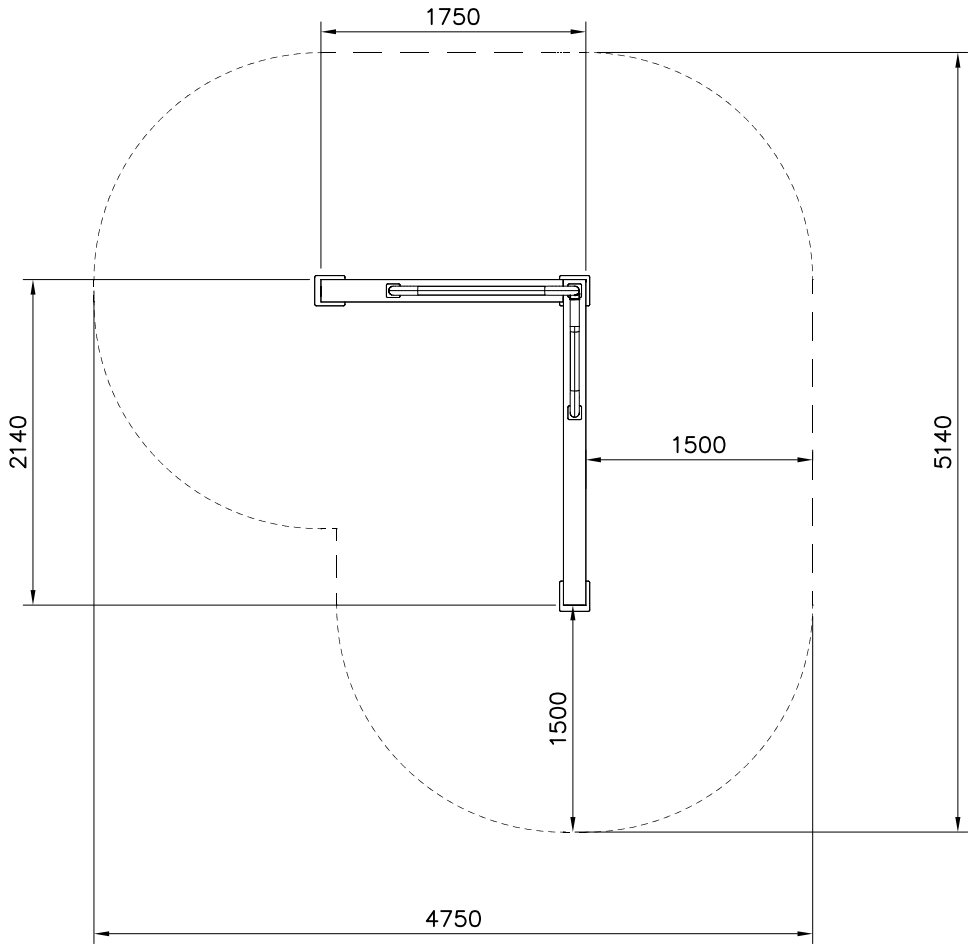

Copyright Lappset Group Ltd

LAPPSET®

081726M

DATE: 20.4.2020

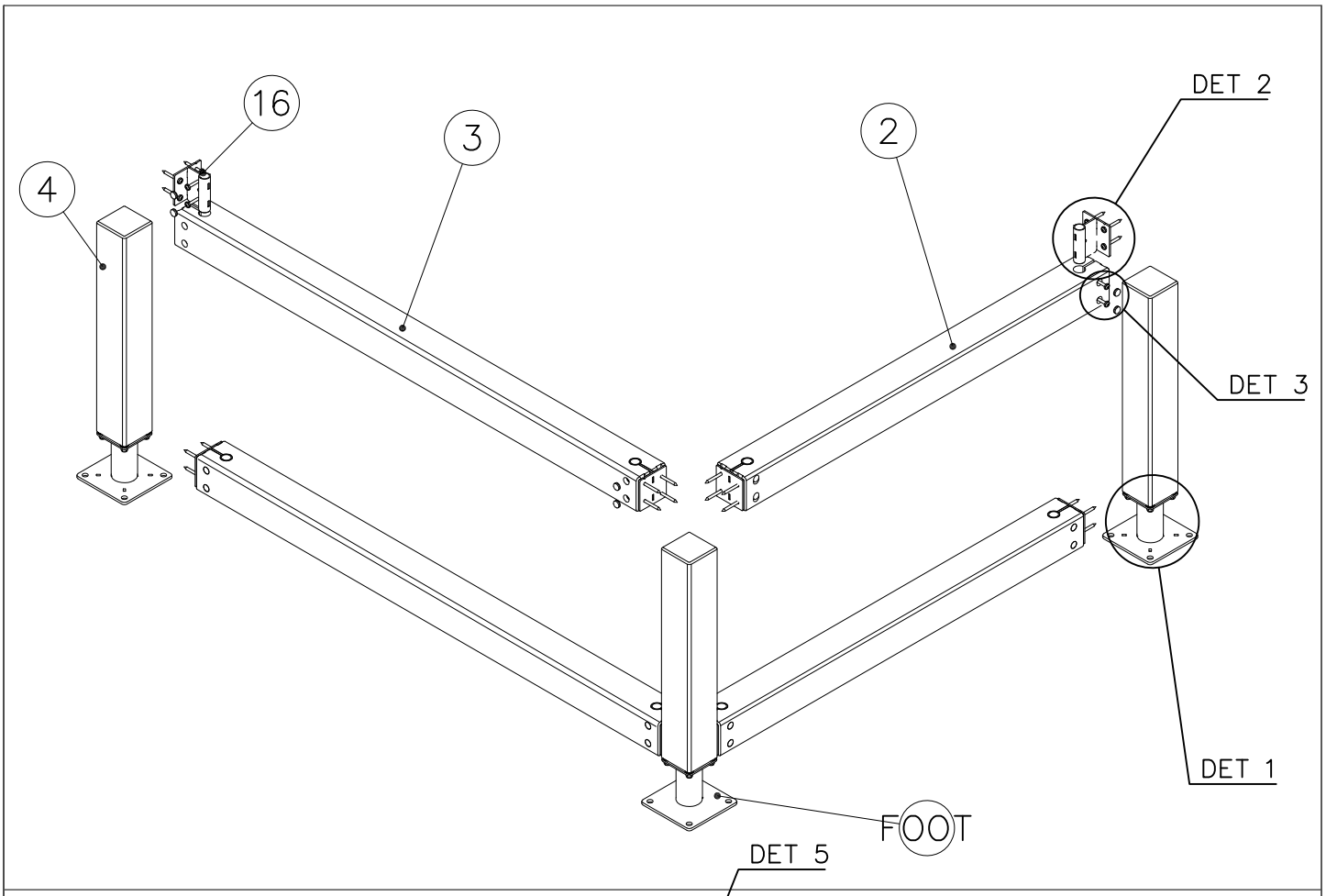

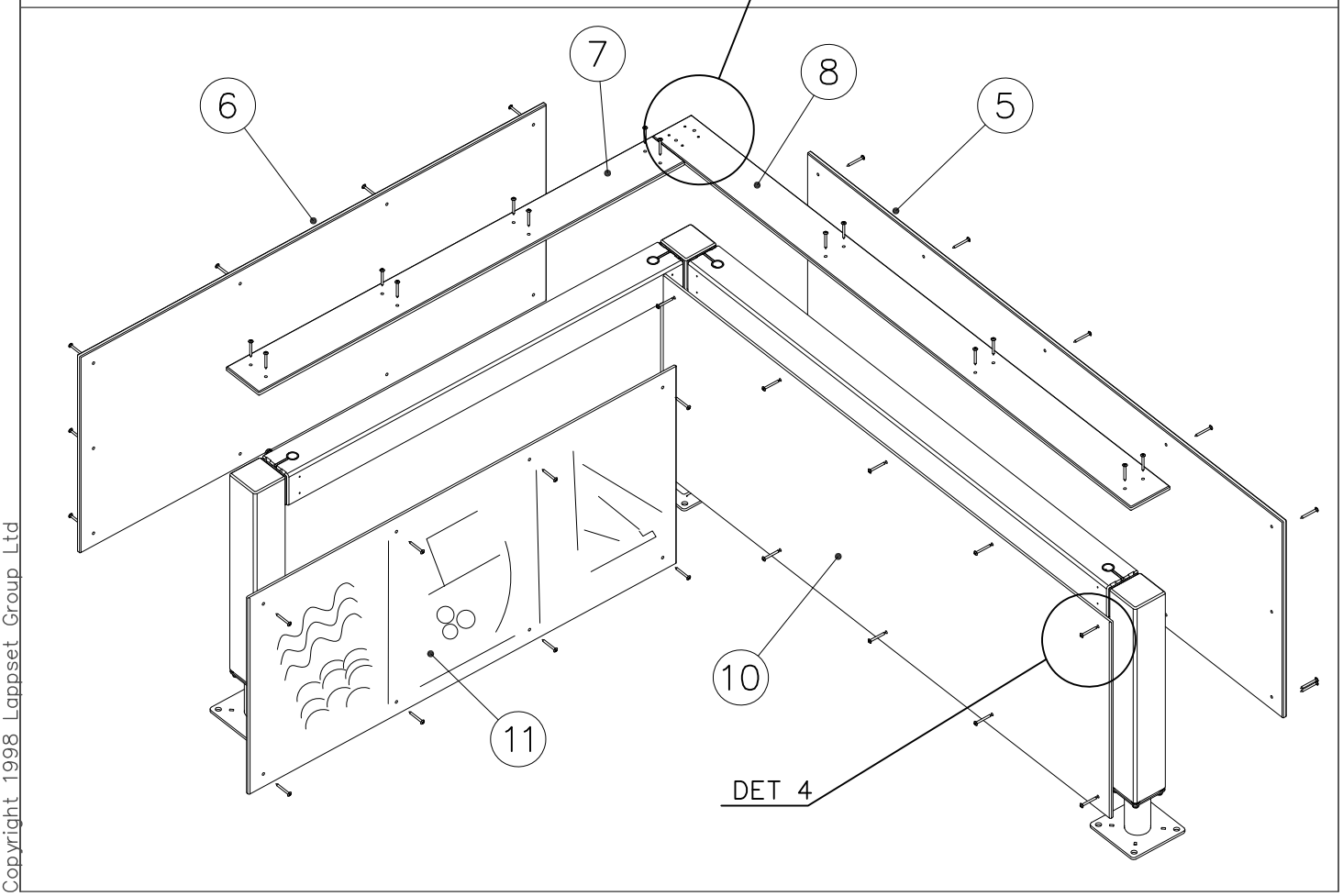

Copyright 1998 Lappset Group Ltd

LAPPSET®

081726M

DATE: 20.4.2020

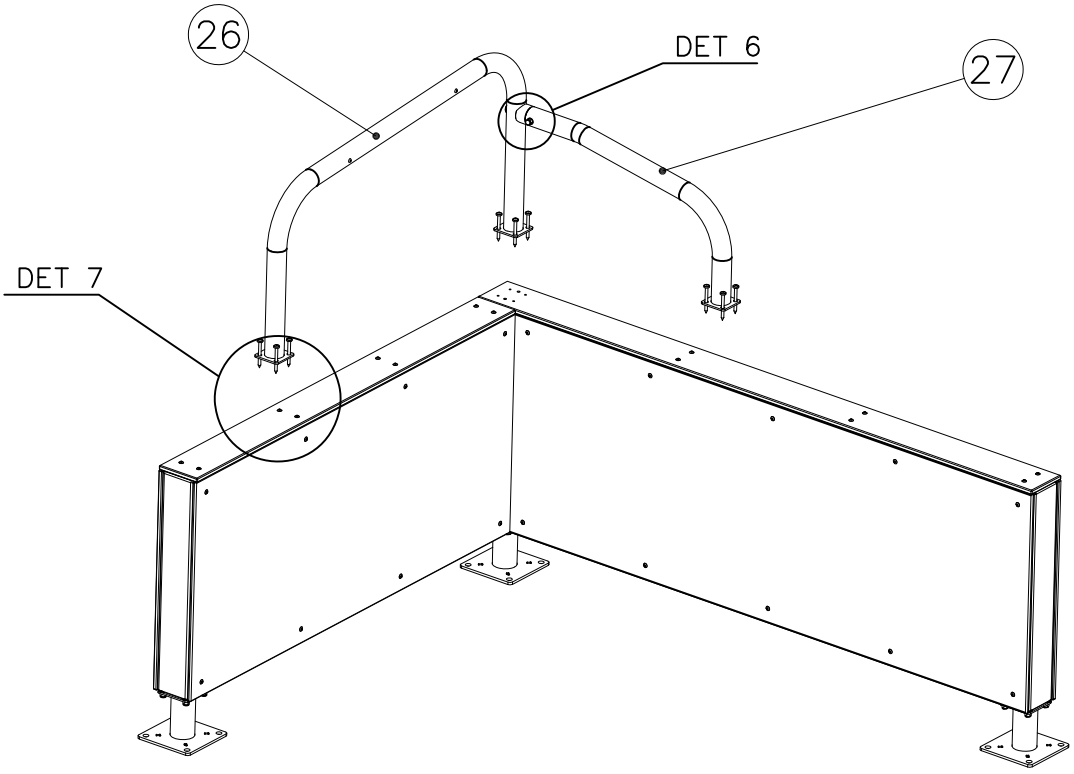

DET 1

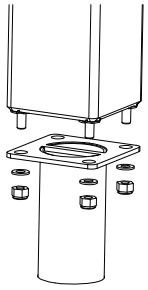

DET 2

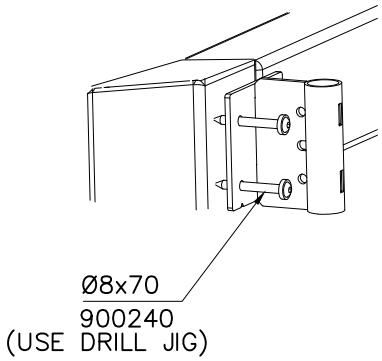

DET 3

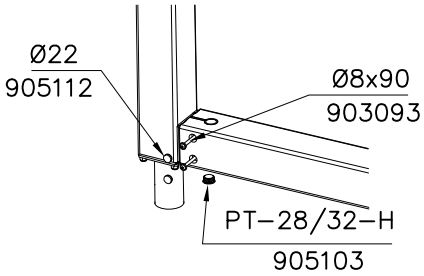

DET 4

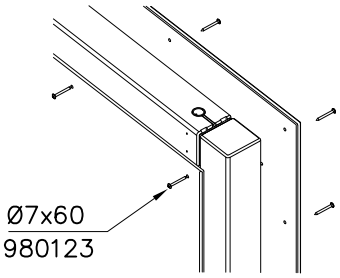

DET 5

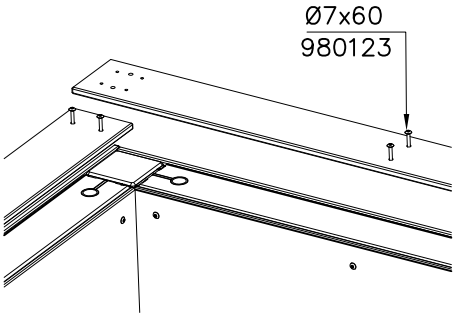

Copyright 1998 Lappset Group Ltd

LAPPSET®

081726M

DATE: 20.4.2020

DET 6

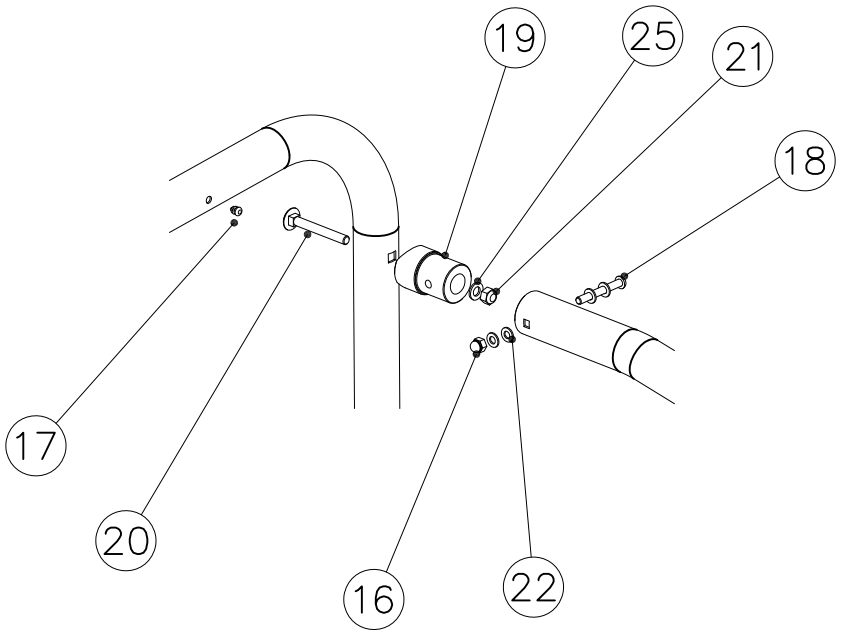

DET 7

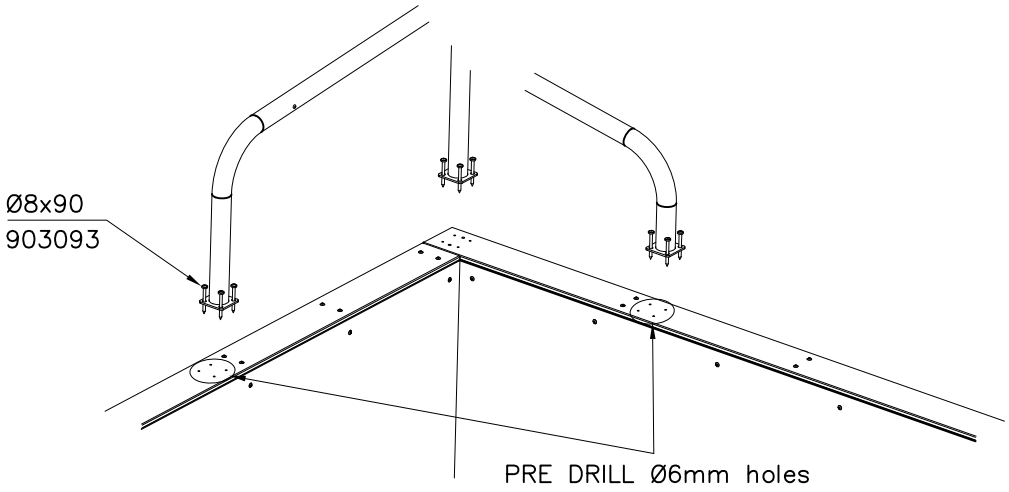

JIG DET A (USE DET 2)

NOTE:
Use drill jig 708857
to predrill Ø5↧50
holes for 910266

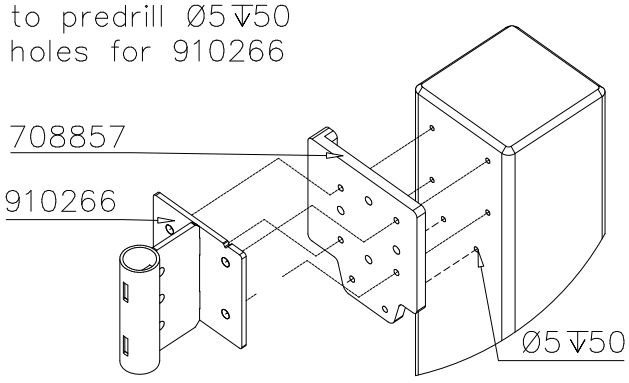

Copyright Lappset Group Ltd

LAPPSET®

IAS EN 16899

REF:
DATE: **24.9.2020**

4x

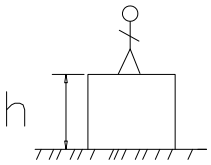

h < 1600

Totally hard surfaces or materials with very limited impact attenuating properties.

Case by case risk assessment is needed including e.g. evalution whether there is forced movement, what is the intended exercise and where will the product be installed.

Materials with significant impact attenuating properties.

Totally hard surfaces.
E.g. concrete or asphalt

Materials with very limited impact attenuating properties.
E.g. wood

fine gravel 0–8 mm

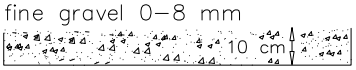

Unsorted sand/ topsoil

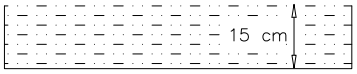

Lawn

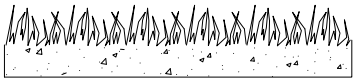

h = 1600- h < 3000

Loose fill material

E.g.
sand/gravel 0,25...8 mm D60/D10<3,0
Woodchips 5...30 mm
bark 20...80 mm

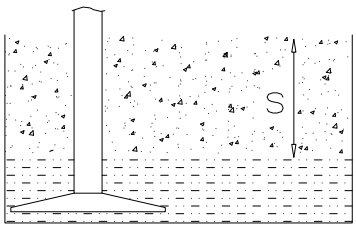

S	h
30 cm	< 3,0 m

Syntethic granulates

S	h
40 mm	~> 1,6...~< 1,8 m
50 mm	~> 1,8...~< 2,25 m
55 mm	~> 2,25...~< 2,4 m
60 mm	~> 2,4...~< 2,55 m
70 mm	~> 2,55...~< 3,0 m

Note. For accurate values, see manufacturer's instructions.

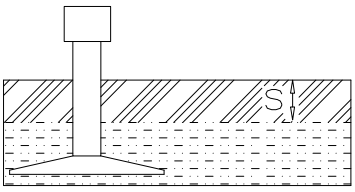

Copyright Lappset Group Ltd