LAPPSET®
220594

PARKOUR M-SIZE FOR TEENAGERS

DATE: 17.4.2015

Grid Size = 1000 mm

1:75
0 3

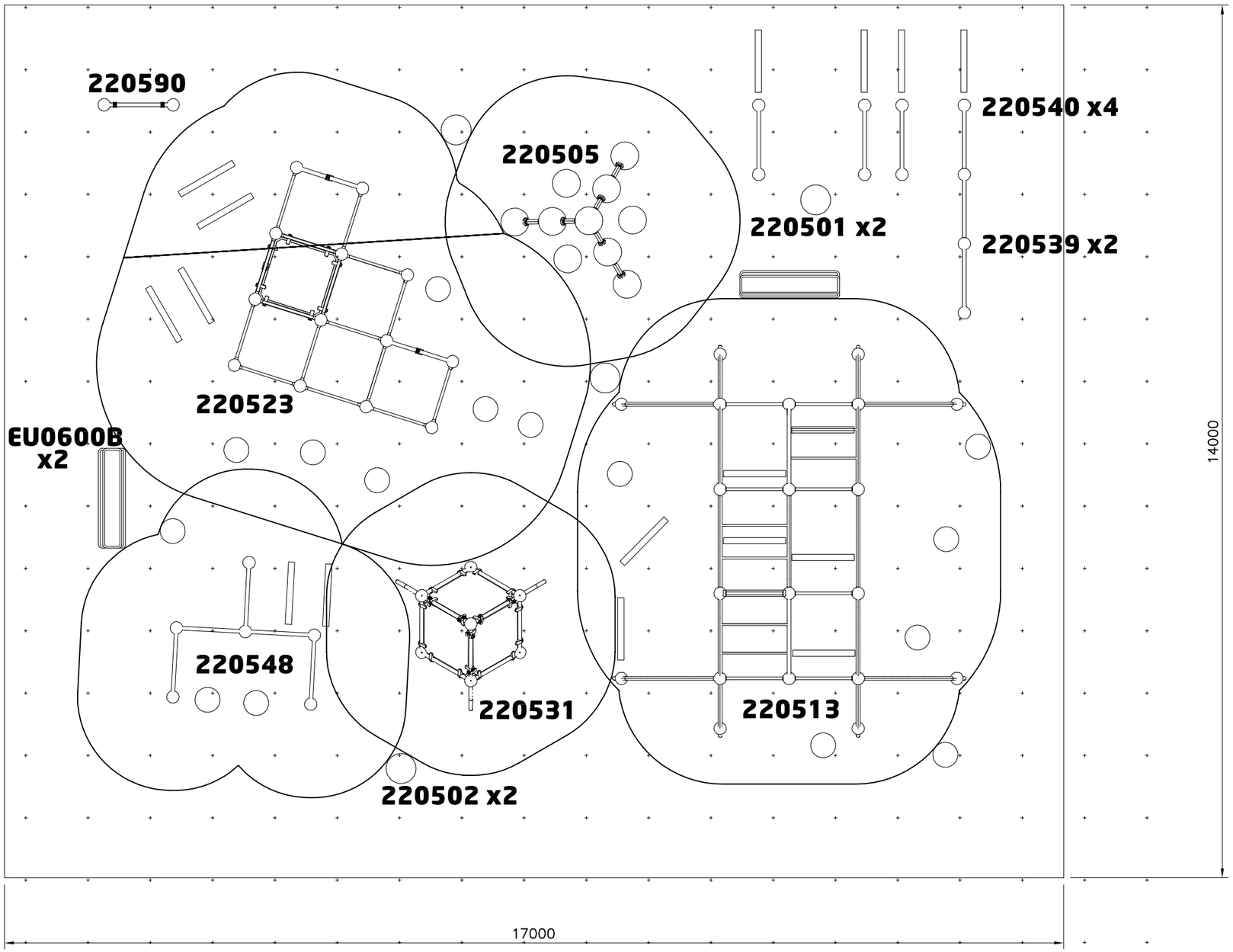

Copyright Lappset Group Ltd

LAPPSET®

220594

PARKOUR FOUNDATIONS

DATE: 17.4.2015

1: 75

0 3

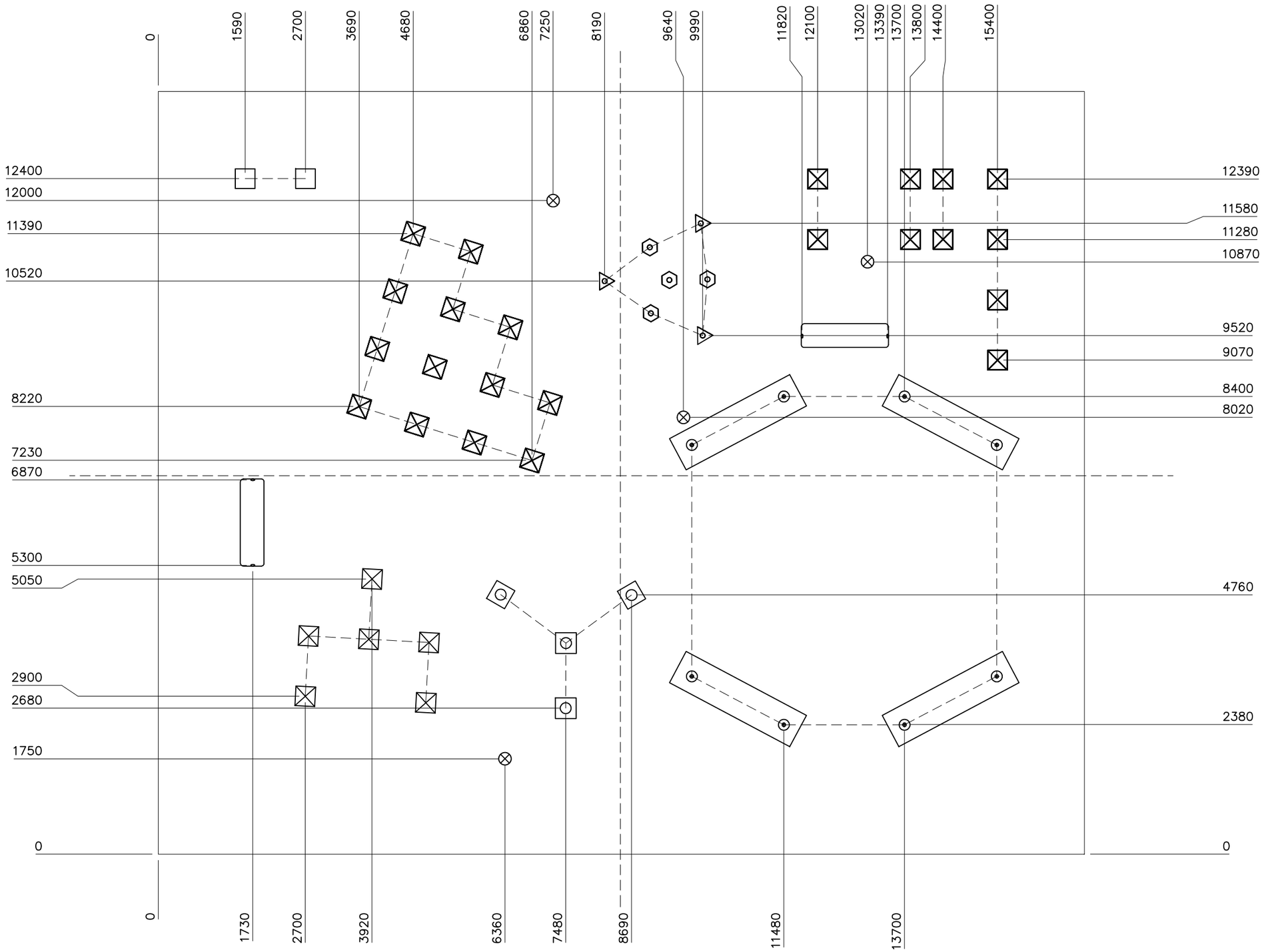

Copyright Lappset Group Ltd

LAPPSET®
220594

PARKOUR JUMP TARGETS

DATE: 17.4.2015

Grid Size = 1000 mm

1:75
0 3

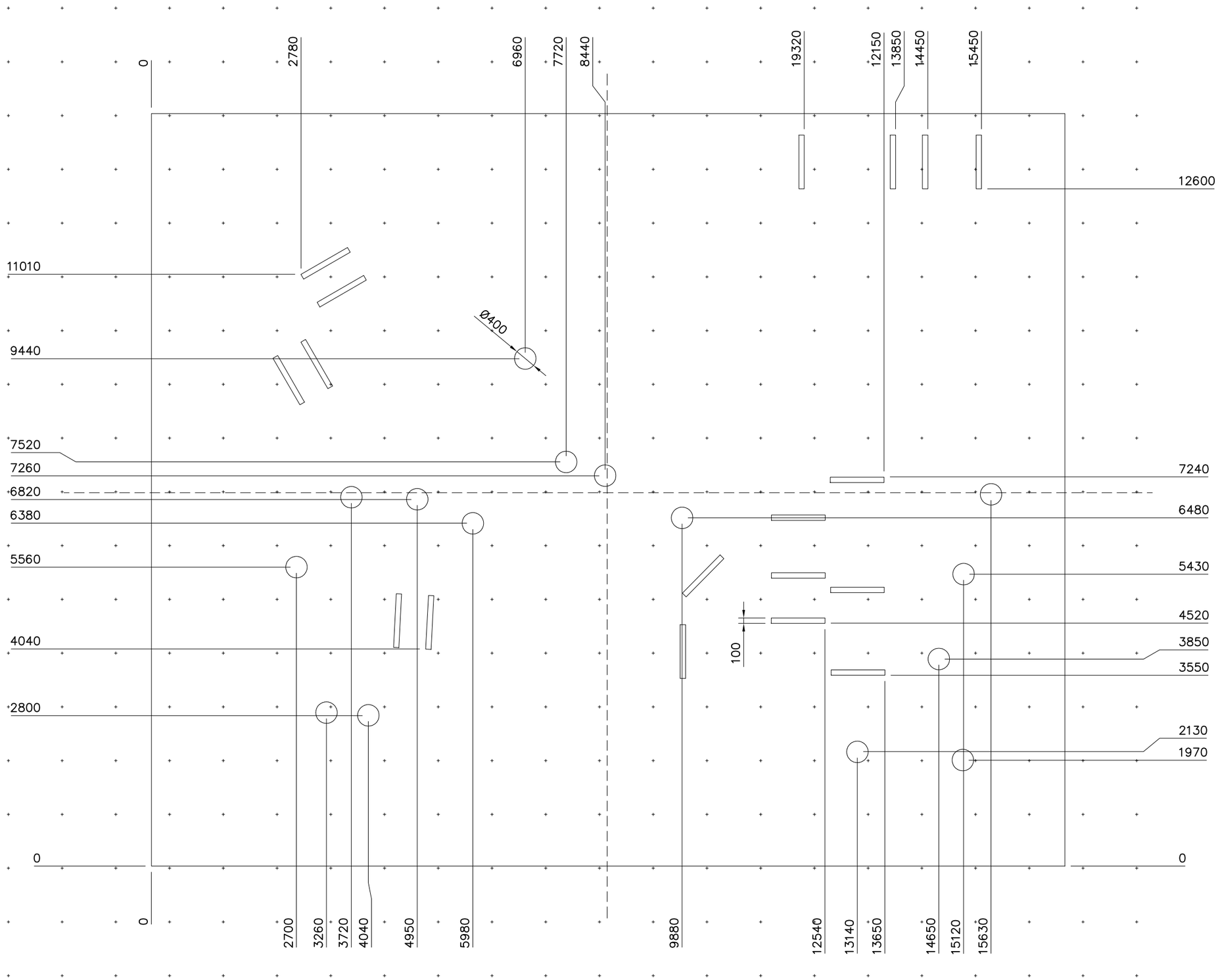

Copyright Lappset Group Ltd

LAPPSET®

220539

PARKOUR

DATE: 22.3.2013

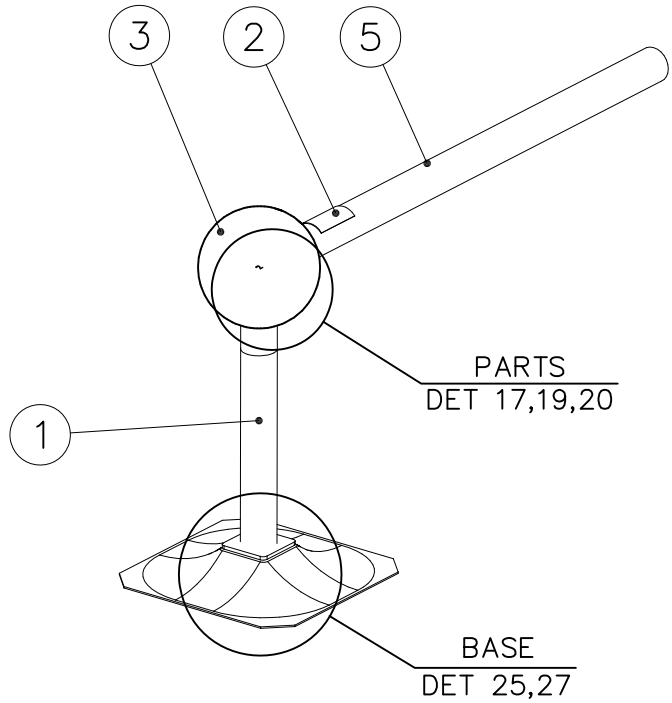

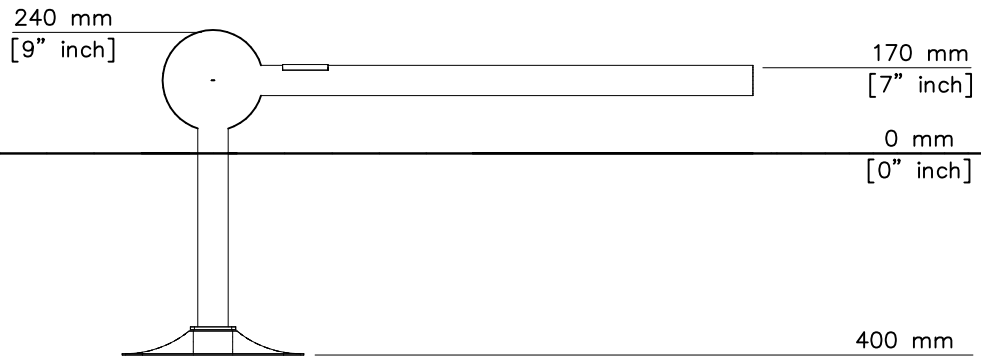

---- Falling Space 10.6 m2 (114 sq ft))
Max Falling Height 170 mm (7" in)

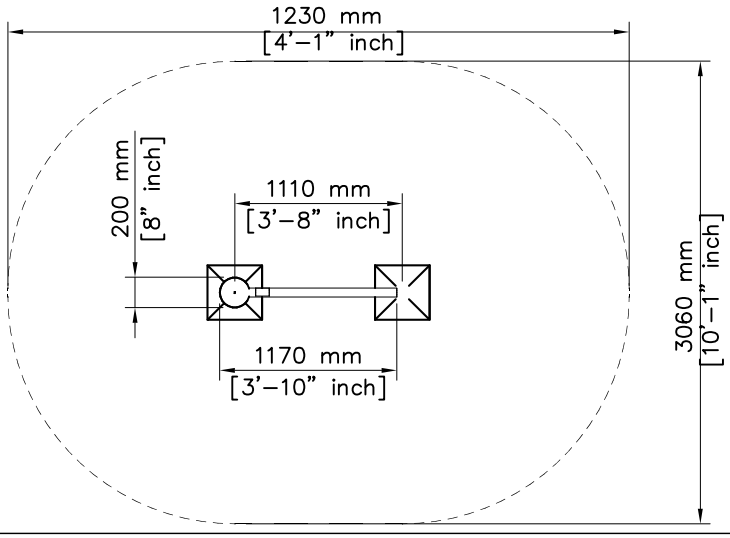

	PCS		PCS
1 701985 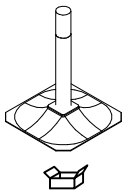	1	2 702341 90x50	1
3 902134 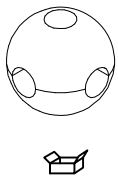	1	4 902157 60x60x2	4
5 902424 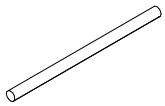 L 1034	1		

LAPPSET 220590

PARKOUR

DATE: 24.5.2018

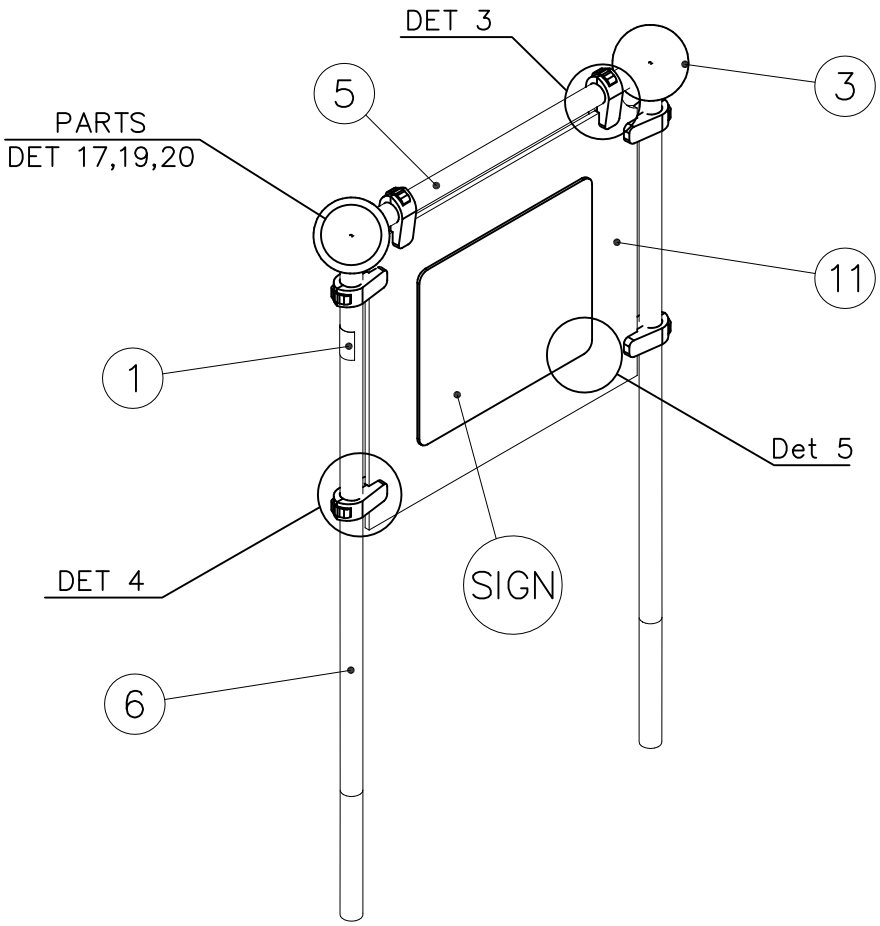

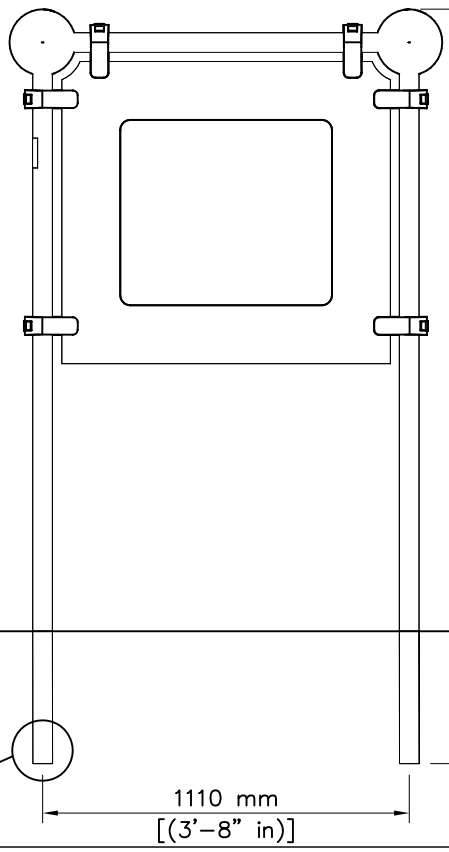

		PCS			PCS
1	702341	1	2	704599	1
	90x50			90x50	
3	902134	2	4	902157	8
				60x60x2	
5	902424	1	6	904130	2
	L 1034			L 2148	
7	902124	12	8	980161	12
	150x50x50			M10	
9	902232	6	10	902233	6
	M10x55			M10x30	
11	704829	1	13	909855	8
	15x913x993			M8x35	
14	909256	8	15	909633	8
	Ø16/8.4x1.6			M8	
16	909873	8		704855–704866	1
	M8x40			NOT INCLUDED 8x560x640	

Copyright Lappset Group Ltd

LAPPSET 220590

PARKOUR

DATE: 24.5.2018

DET 1

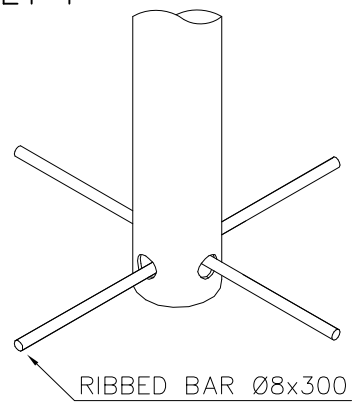

DET 2

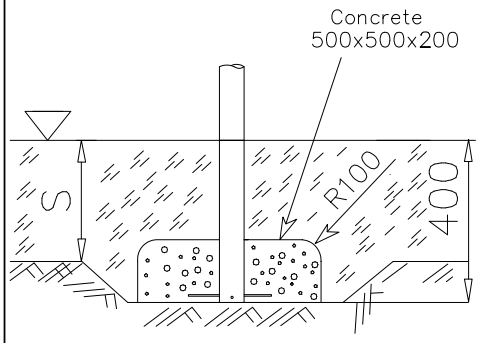

DET 3

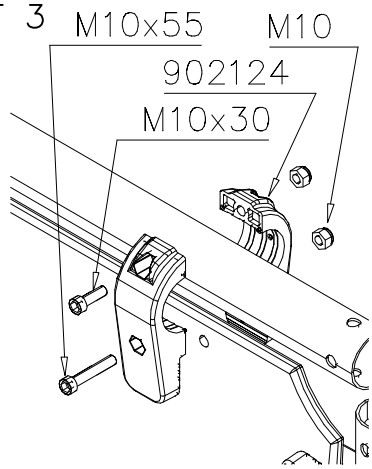

DET 4

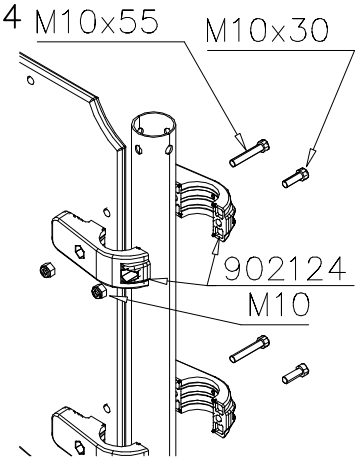

DET 5

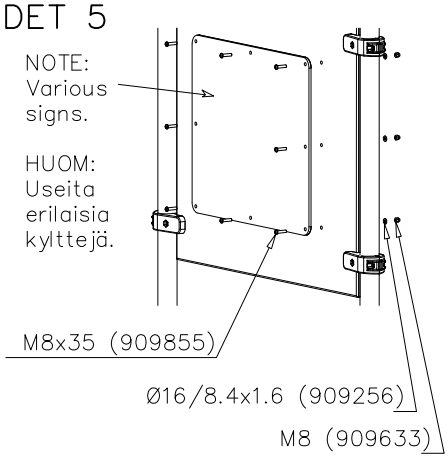

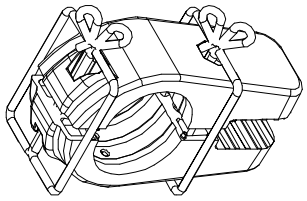

NOTE:
Use a wire marked pairs of the same junction.

Huom!
Käytä langalla merkittyä paria samassa liitoksessa.

OPTIONAL

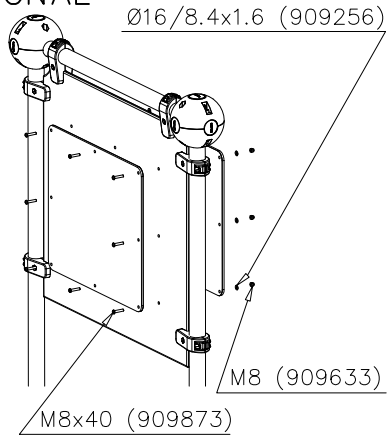

Copyright 1998 Lappset Group Ltd

LAPPSET®

PARKOUR

ASENNUSOHJE
MONTERINGSANSVISNING
INSTALLATION INSTRUCTION
AUFBAUANLEITUNG
NOTICE D'INSTALLATION

DATE: 23.2.2015

220523

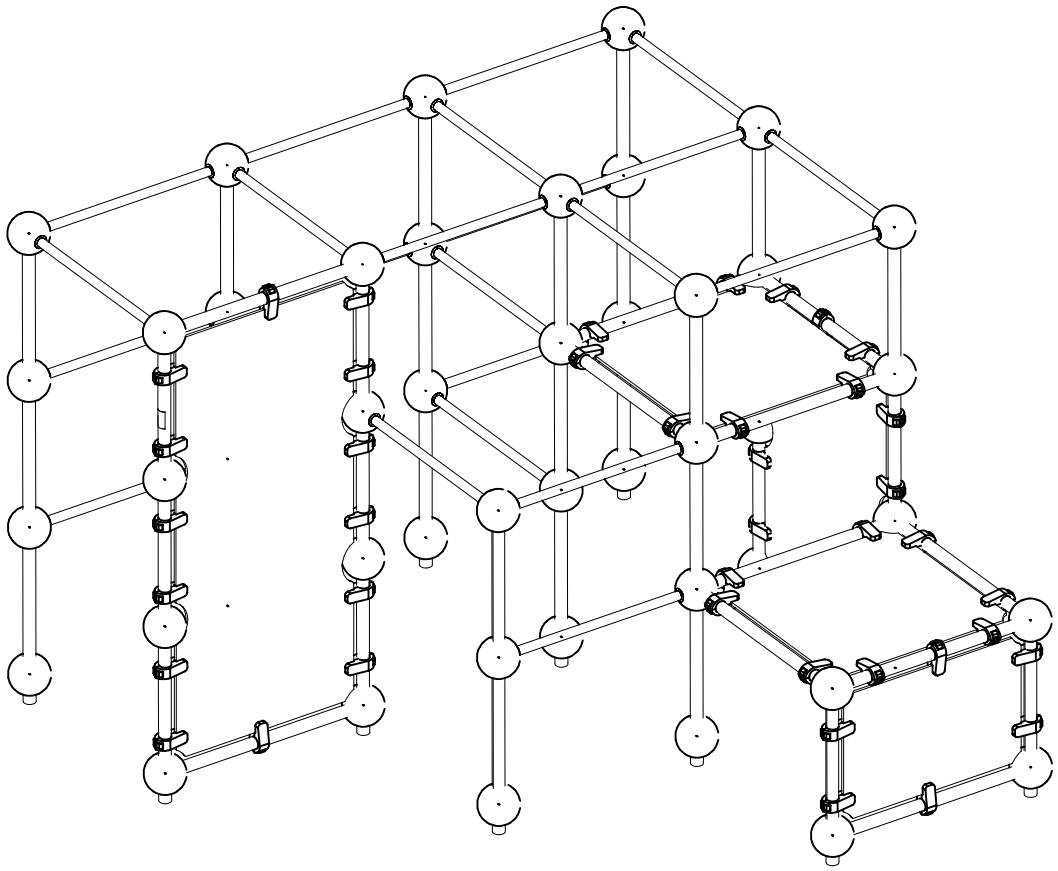

Copyright Lappset Group Ltd

LAPPSET®

PARKOUR

220523

3

DATE: 23.2.2015

701985	PCS	702341	PCS	703456	PCS	703479	PCS	703484	PCS	703486	PCS
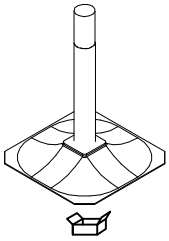	13		1	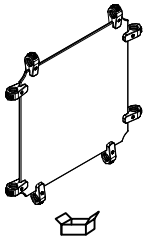	2	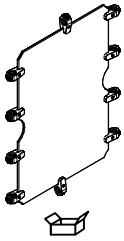	1	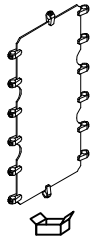	1	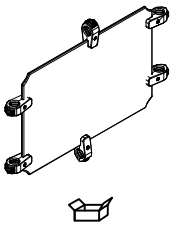	1
		90x50									
901991	PCS	902022	PCS	902134	PCS	904747	PCS	902424	PCS	904015	PCS
	1	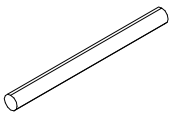	2	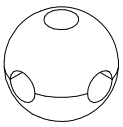	47	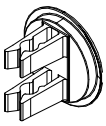	133	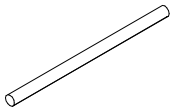	12	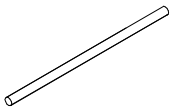	16
L 1493		L 710				60x60x2		L 1034		Ø44.5x1034	
904032	PCS	904100	PCS	904102	PCS		PCS		PCS		PCS
	10	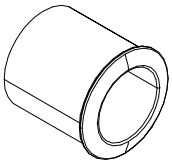	44	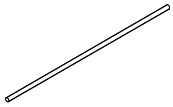	3						
L 2278		44.5–60.3		Ø44.5x2148							
	PCS		PCS		PCS		PCS		PCS		PCS
	PCS		PCS		PCS		PCS		PCS		PCS
	PCS		PCS		PCS		PCS		PCS		PCS
	PCS		PCS		PCS		PCS		PCS		PCS

Copyright Lappset Group Ltd

LAPPSET®

PARKOUR

220523

DATE: 23.2.2015

4

EN Impact Area 45.4 m2 (489 sq ft)

Grid Size 1000 mm (40" in)

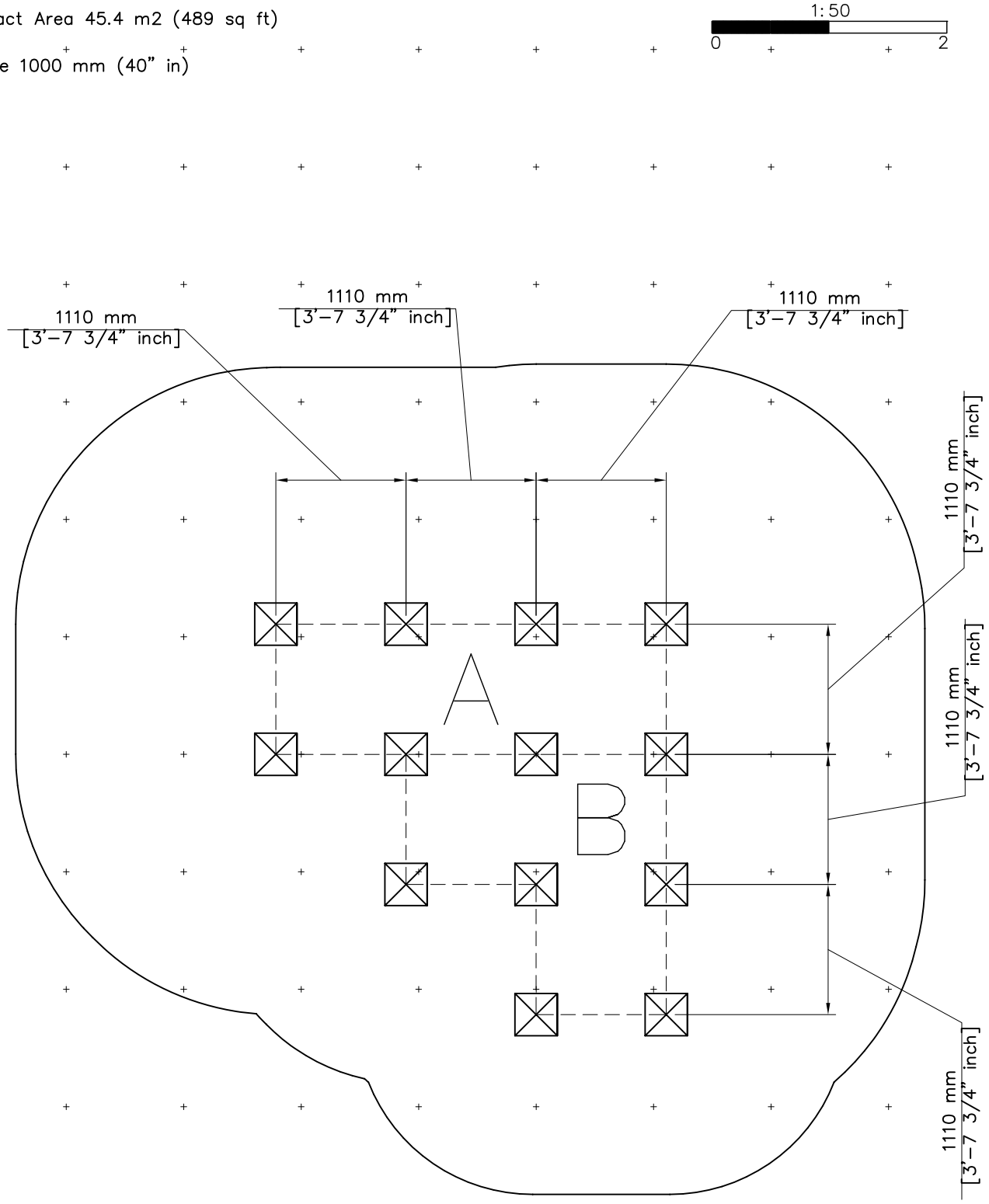

Copyright Lappset Group Ltd

LAPPSET®
PARKOUR

220523

DATE: 23.2.2015

5

EN Impact Area 45.4 m2 (489 sq ft)

Falling Space 45,4 m2 (489 sq ft)
Max Falling Height 2530 mm (8'–3 3/4" in)

1:50
0 2

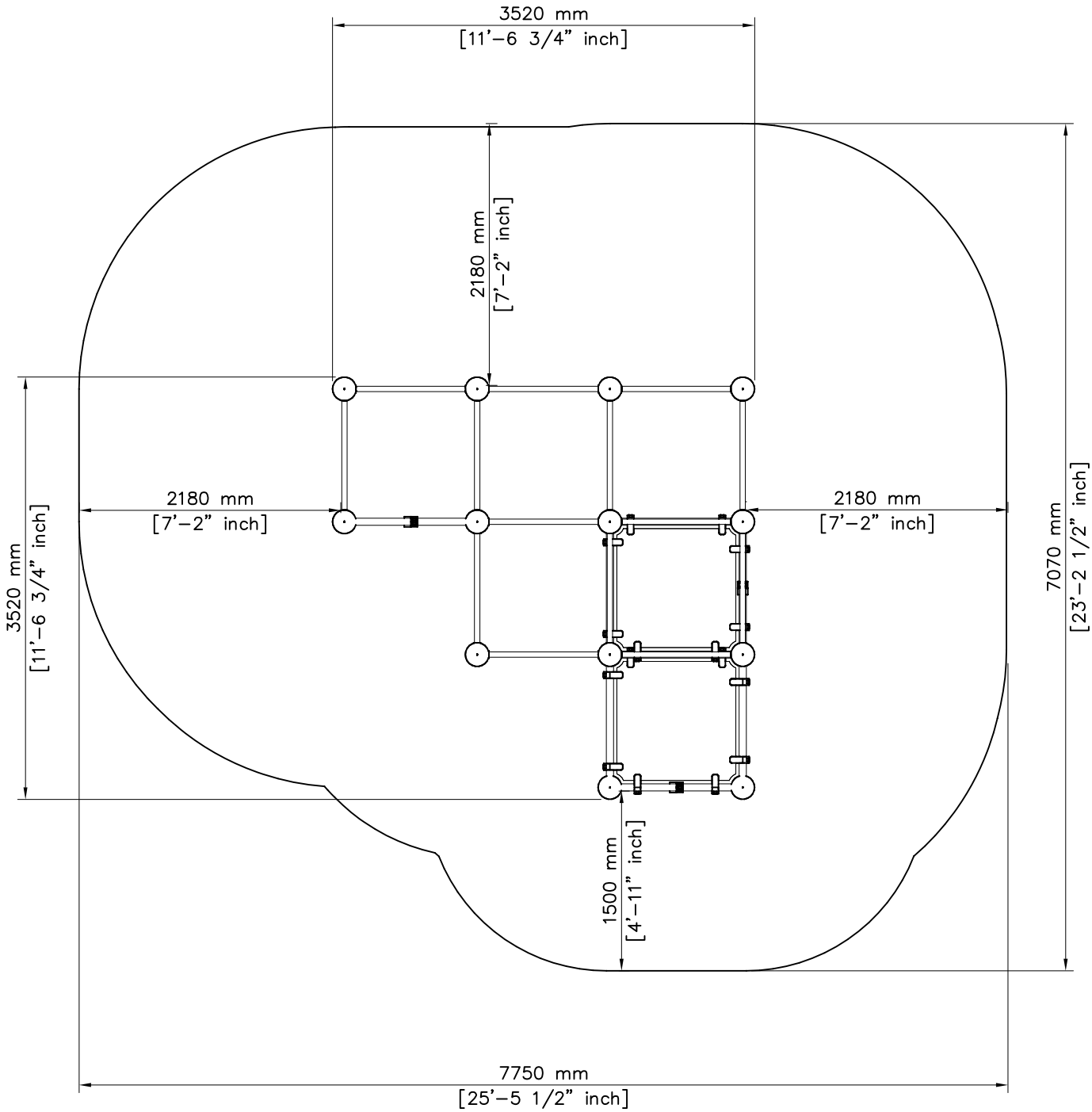

Copyright Lappset Group Ltd

LAPPSET®
PARKOUR

220523

DATE: 23.2.2015

5A

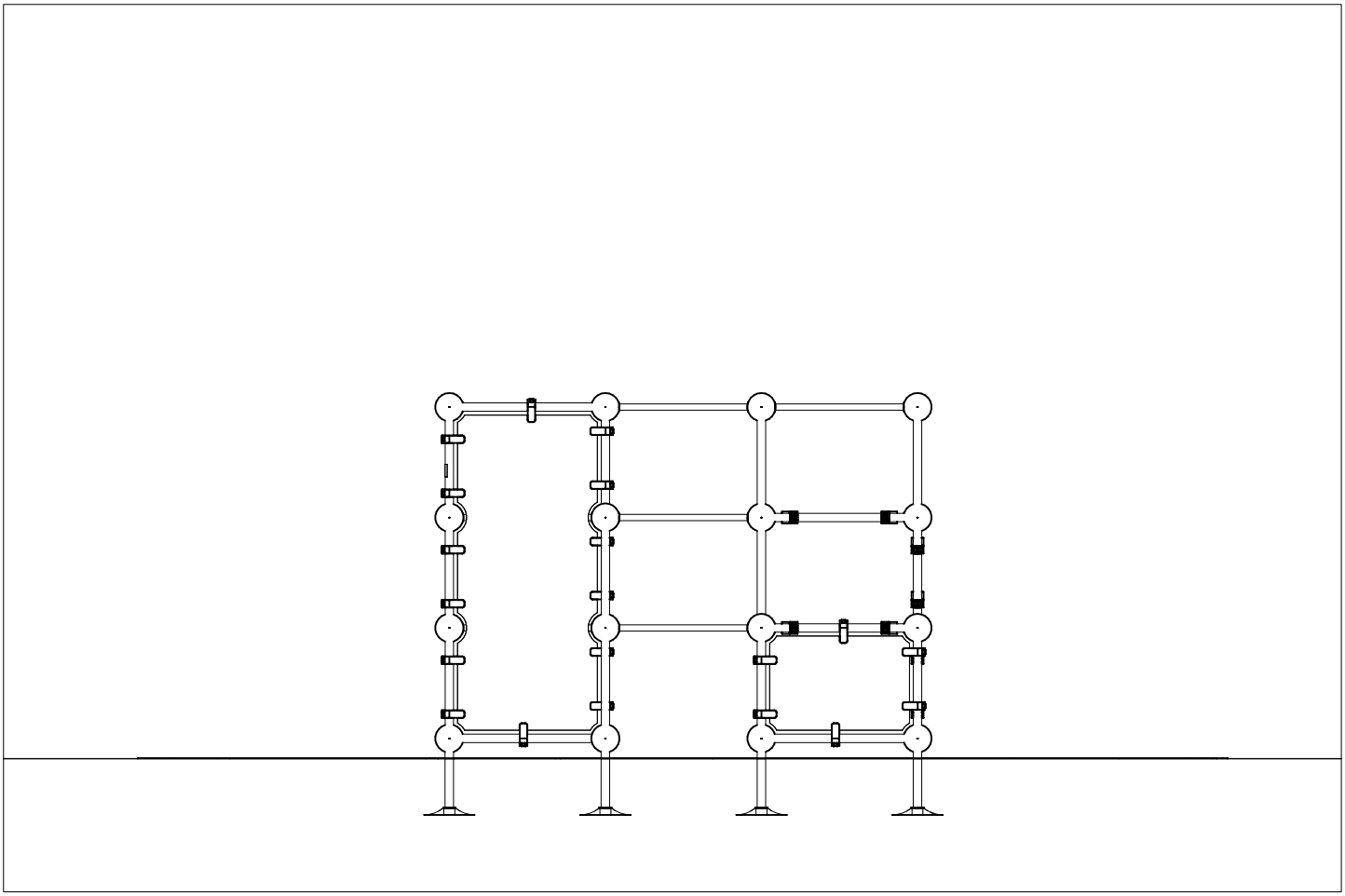

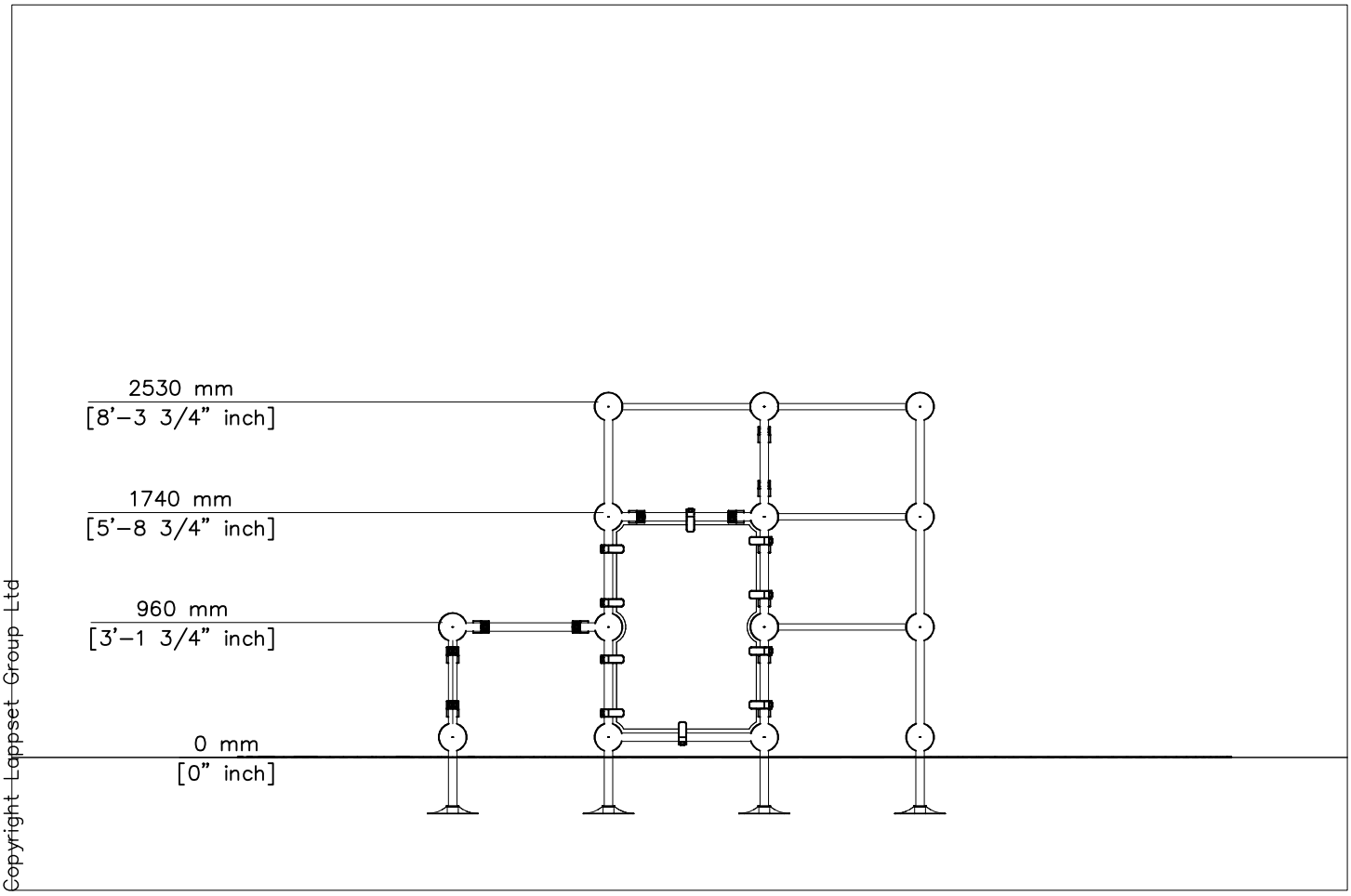

Copyright Lappset Group Ltd

LAPPSET®

PARKOUR

220523

DATE: 23.2.2015

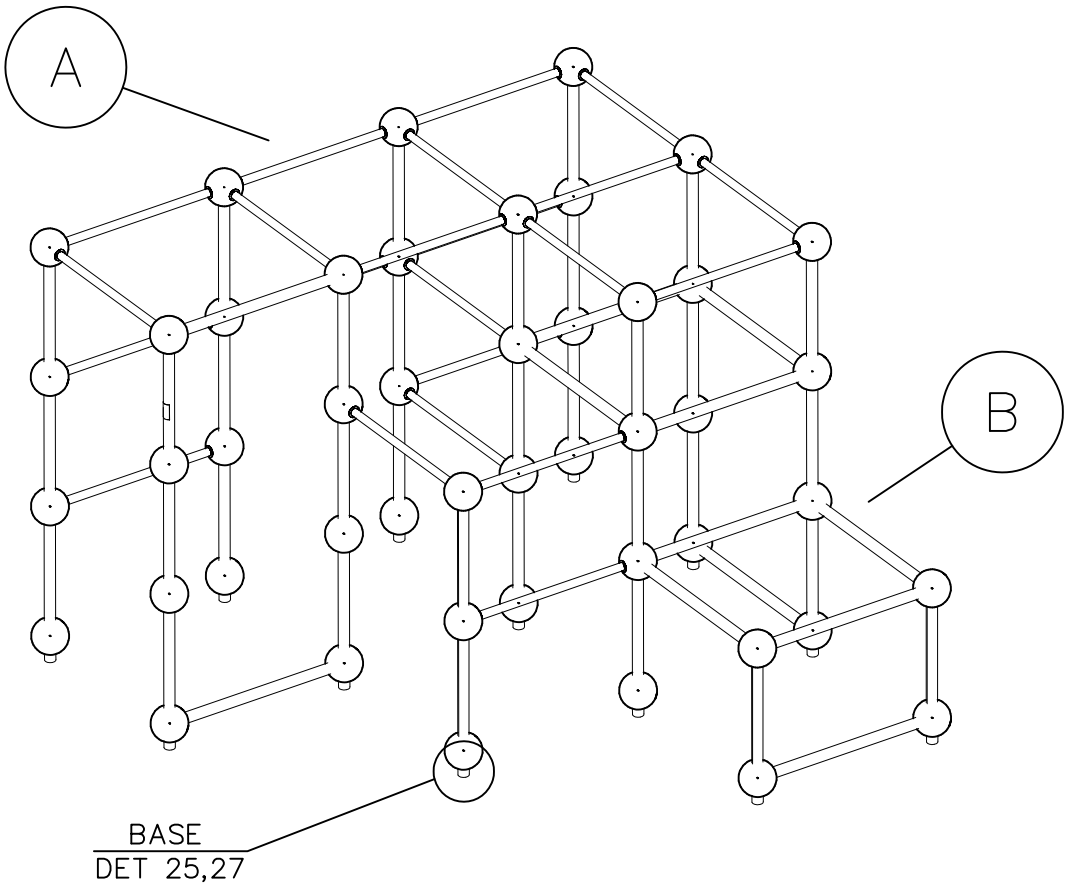

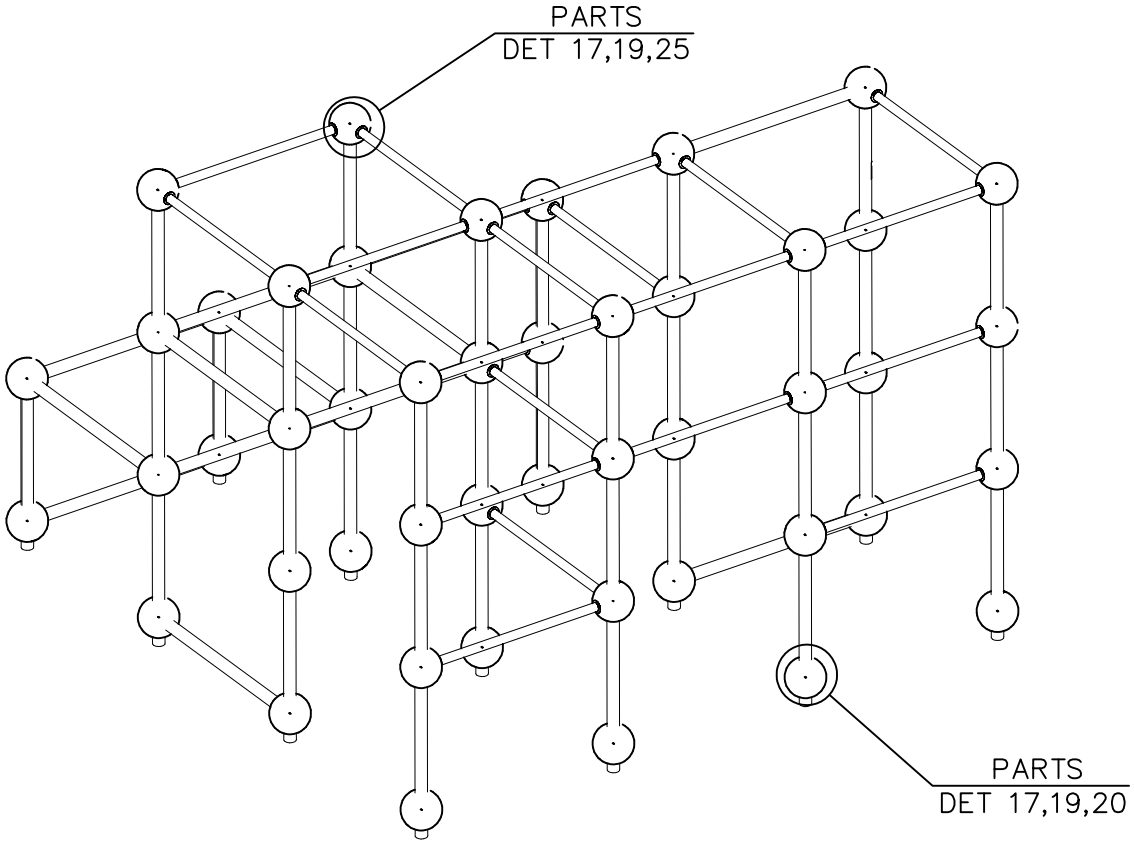

Copyright Lappset Group Ltd

LAPPSET®
PARKOUR

220523

TOWER A

DATE: 23.2.2015

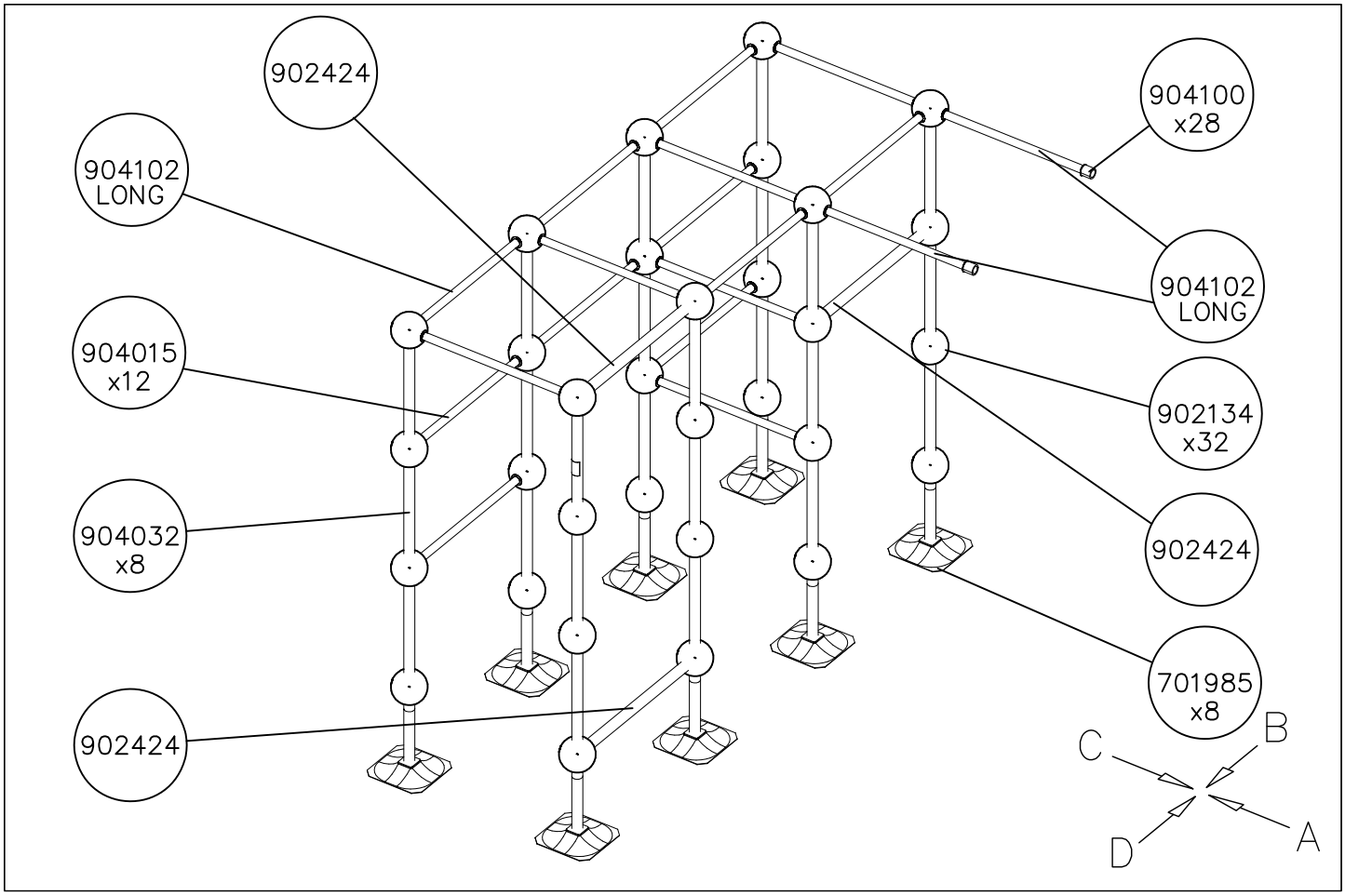

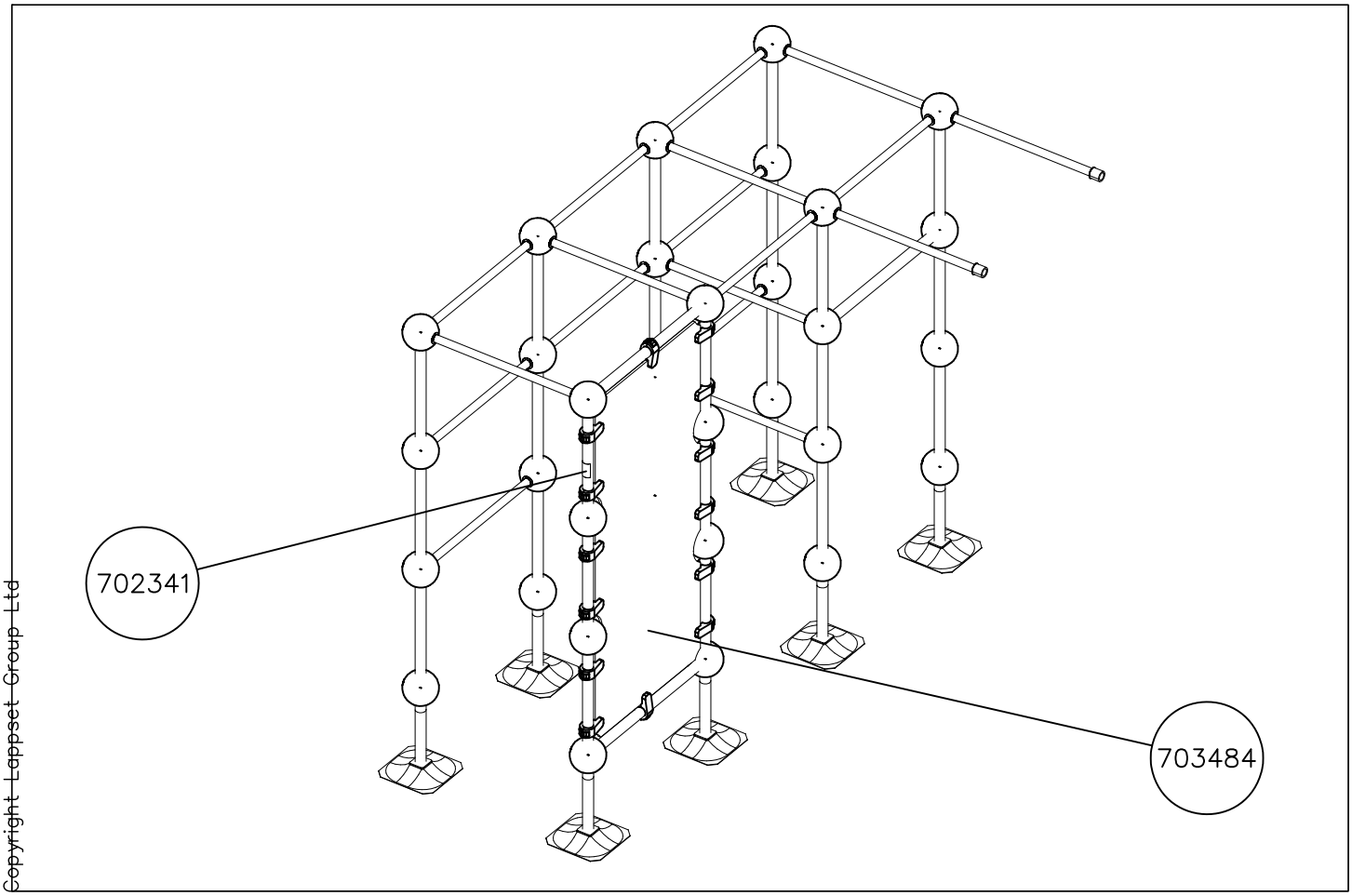

Copyright Lappset Group Ltd

LAPPSET®
PARKOUR

220523

TOWER A
7a

DATE: 23.2.2015

1:50

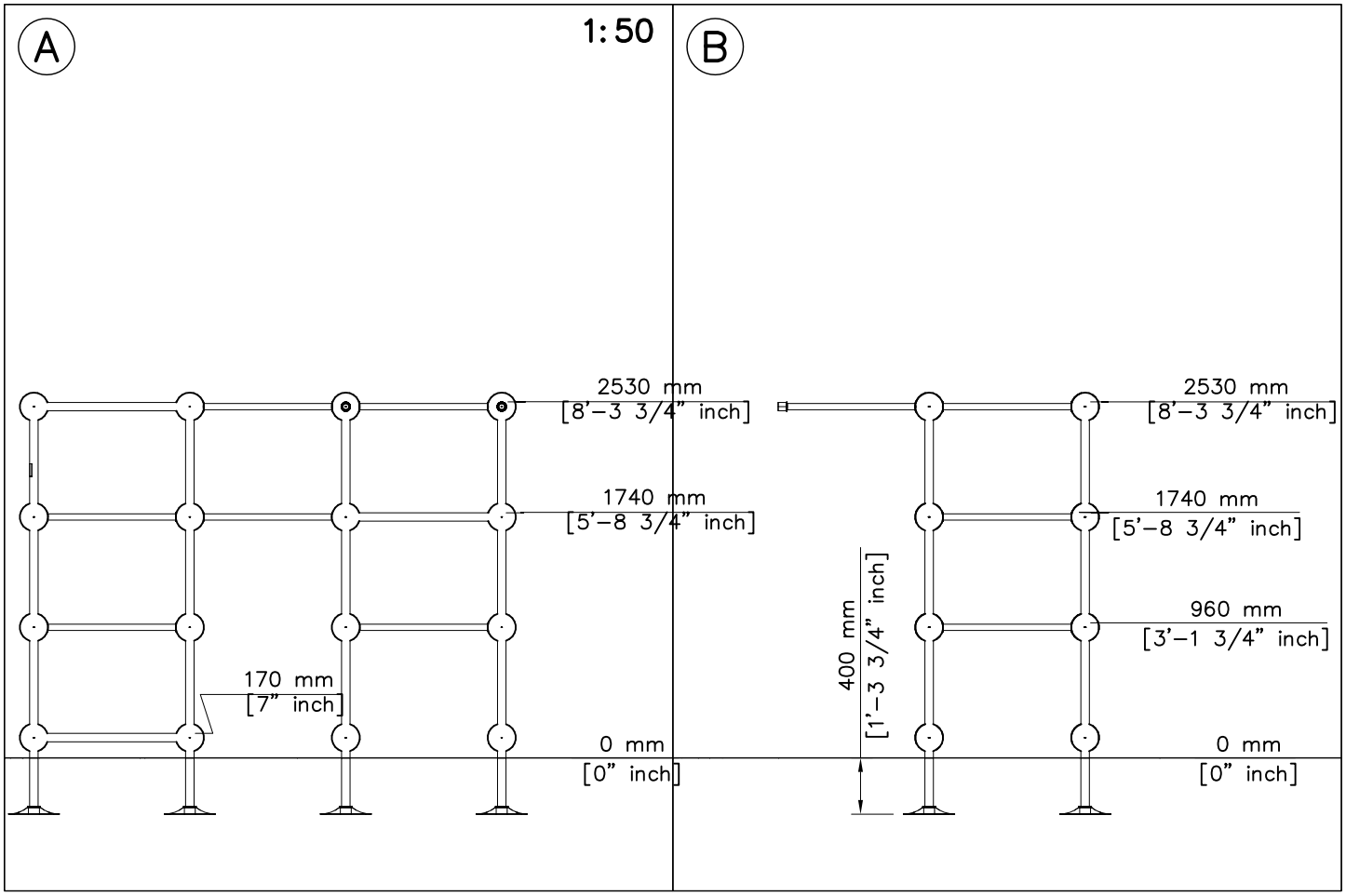

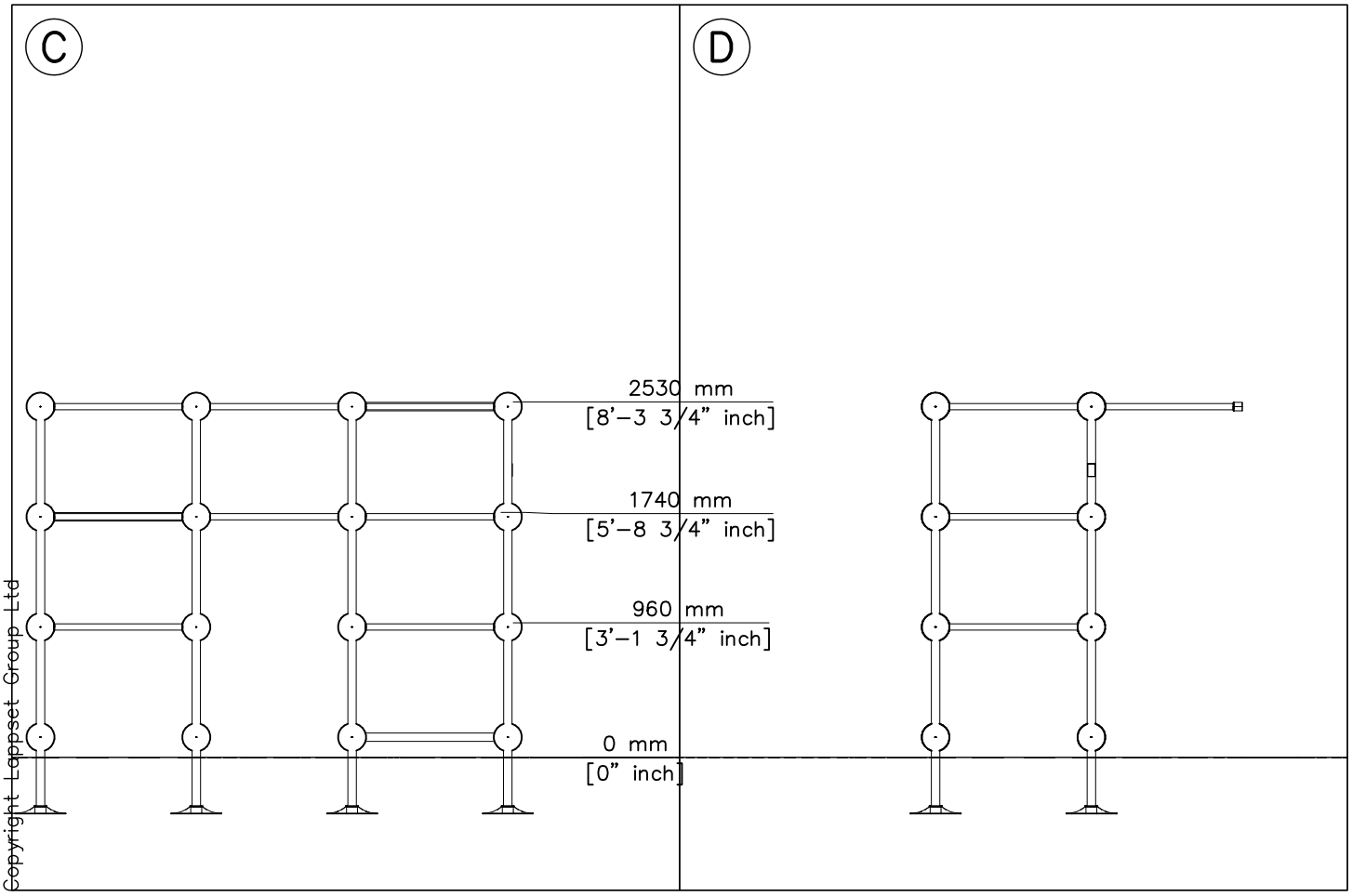

Copyright Lappset Group Ltd

LAPPSET®
PARKOUR

220523

TOWER B
7b

DATE: 23.2.2015

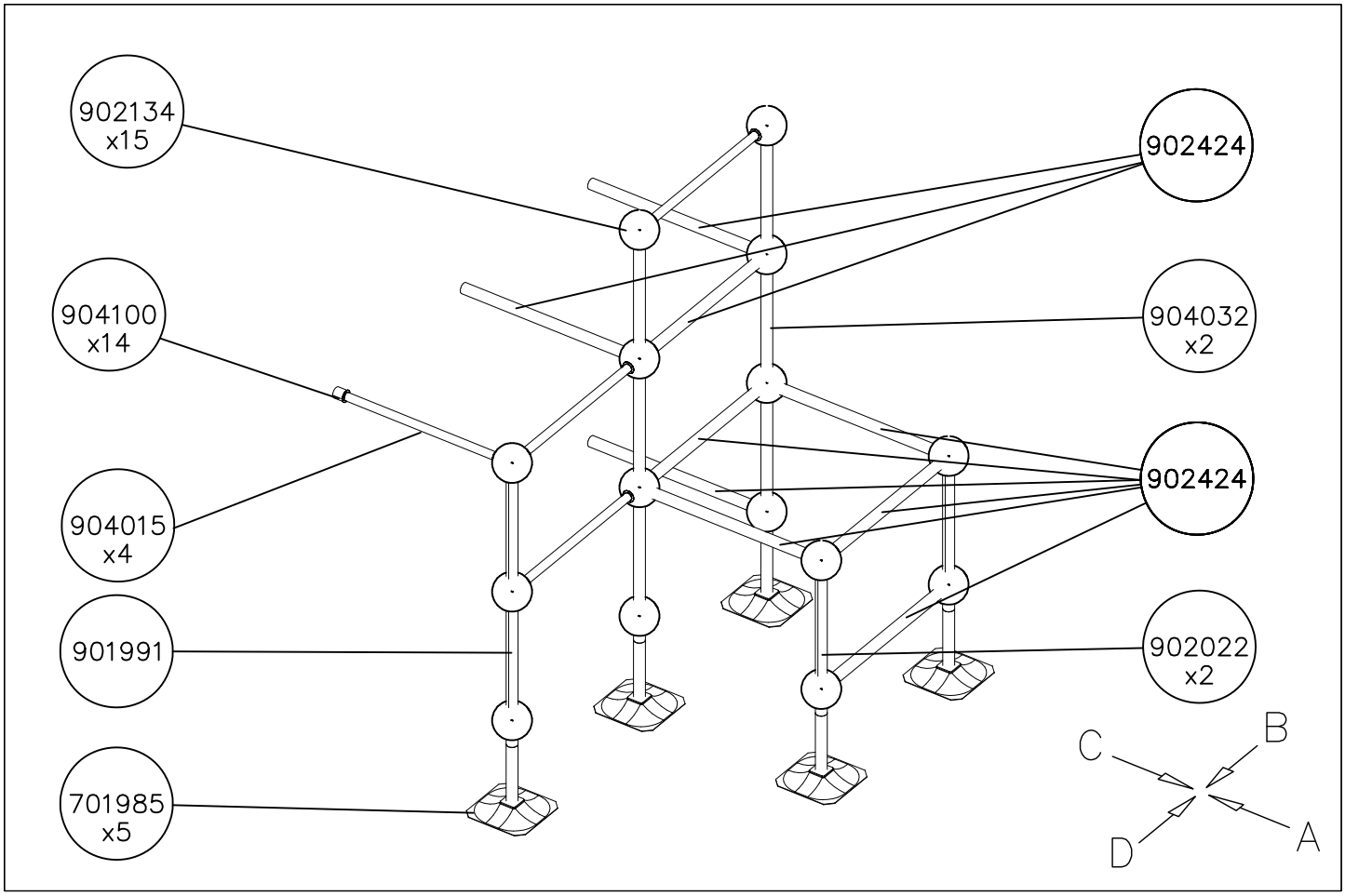

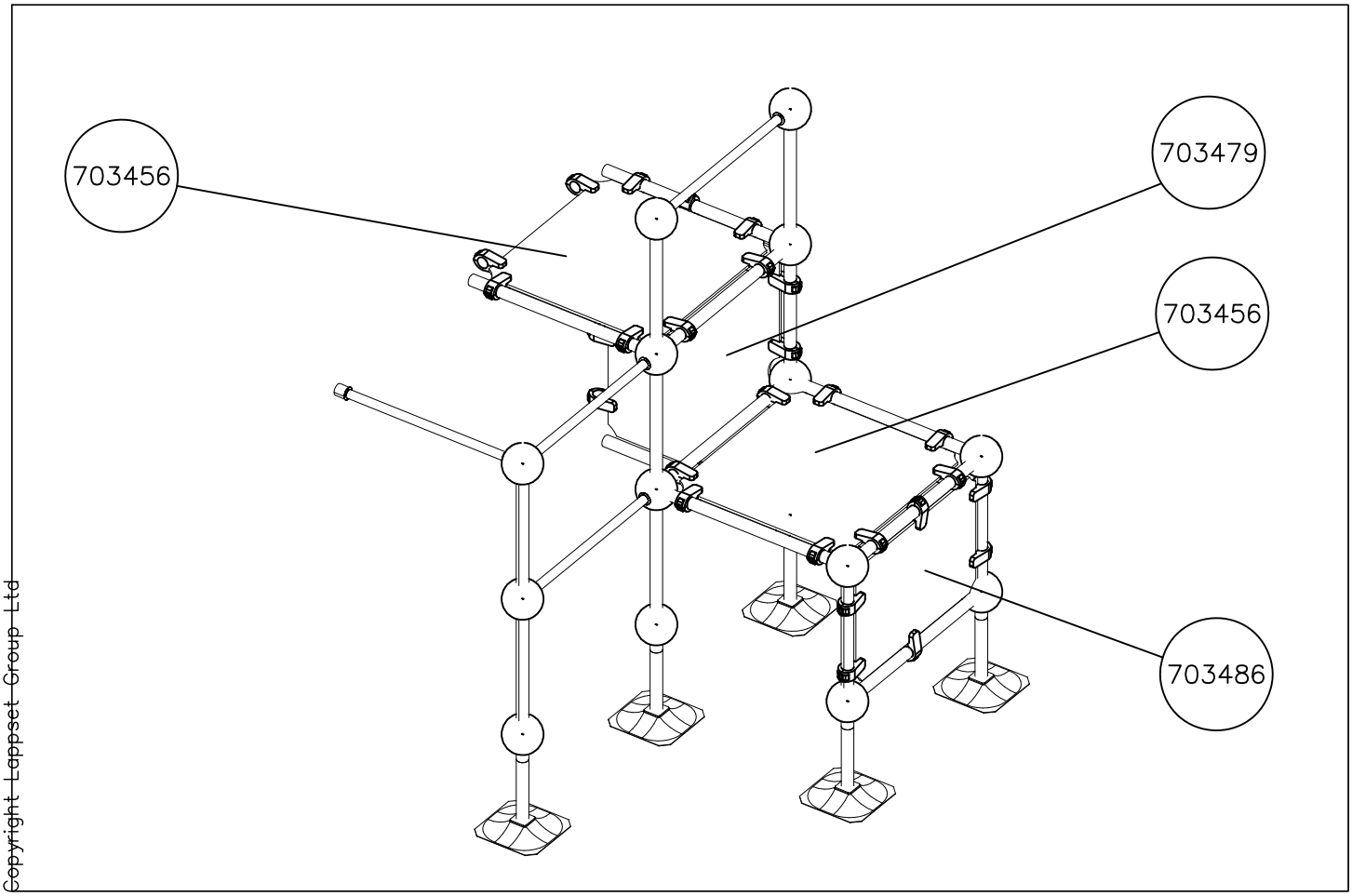

Copyright Lappset Group Ltd

LAPPSET®
PARKOUR

220523

TOWER B
7c

DATE: 23.2.2015

A

1:50

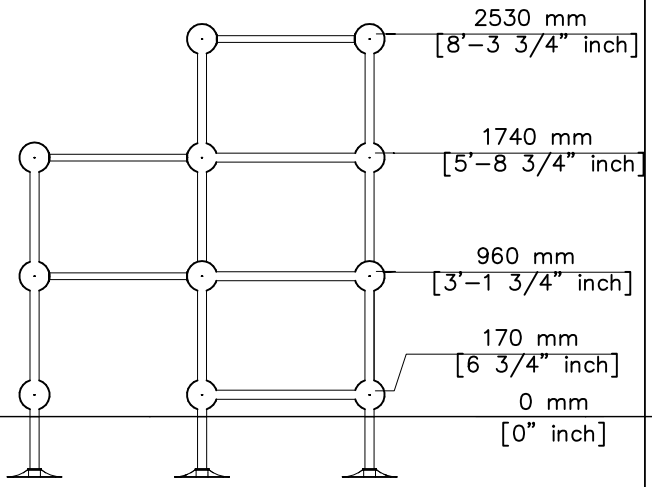

B

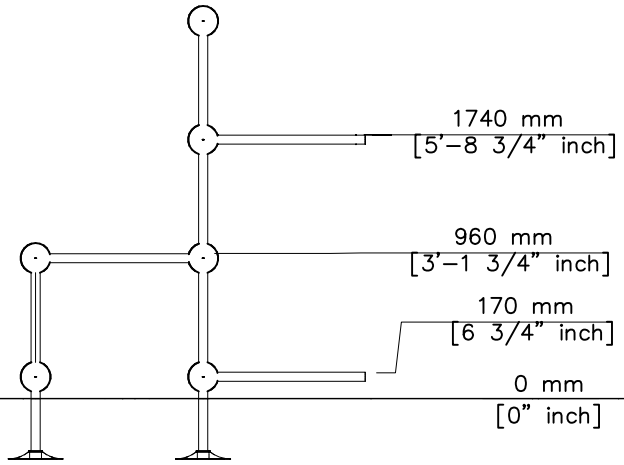

C

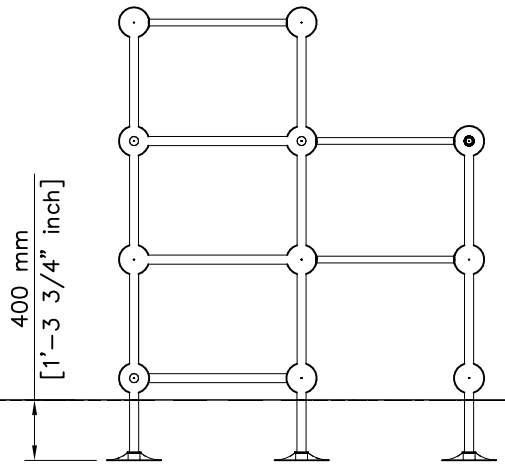

D

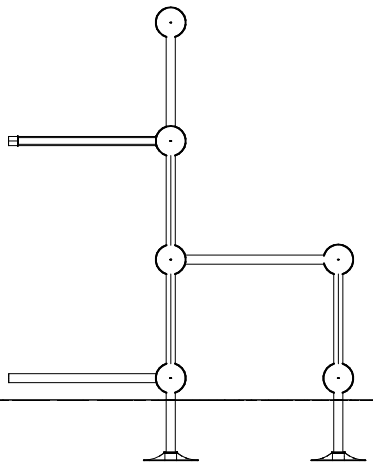

Copyright Lappset Group Ltd

LAPPSET®

PARKOUR

220523

DATE: 23.2.2015

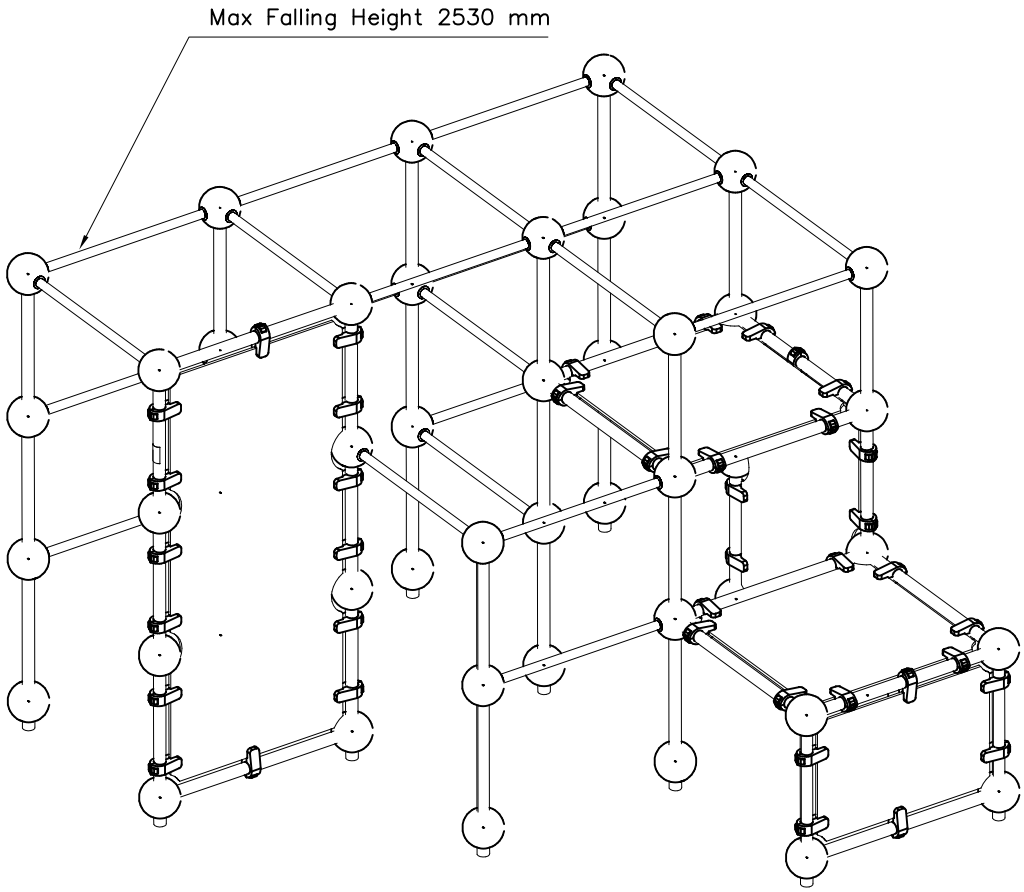

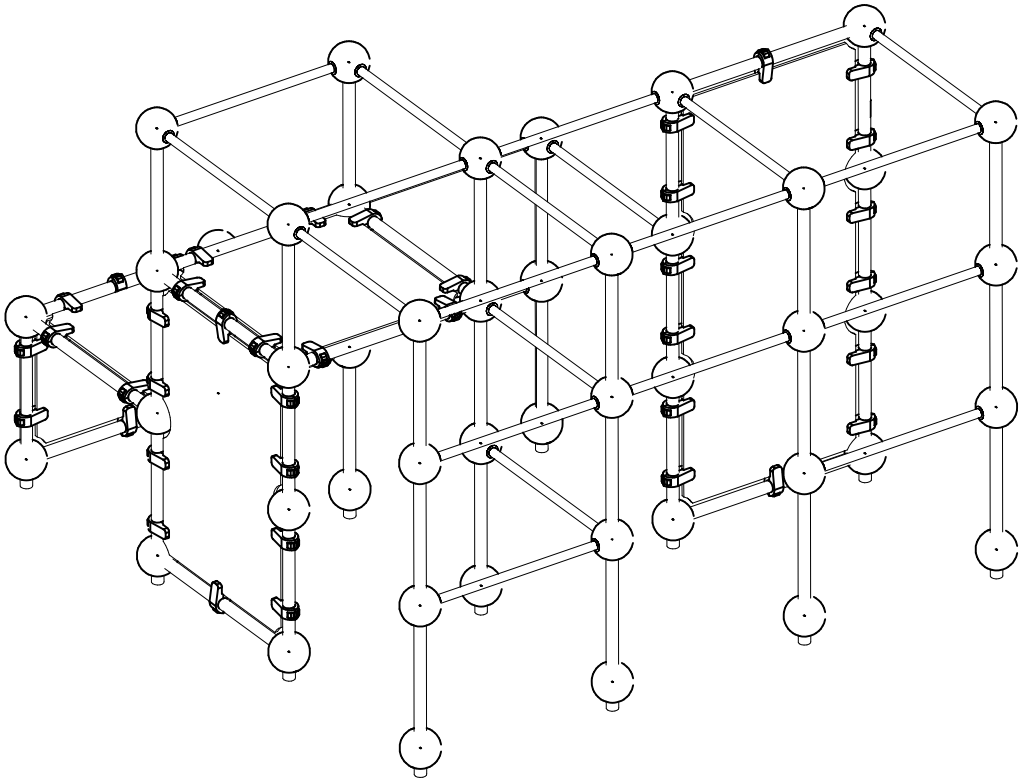

Copyright Lappset Group Ltd

LAPPSET®

220548

PARKOUR

DATE: 20.6.2019

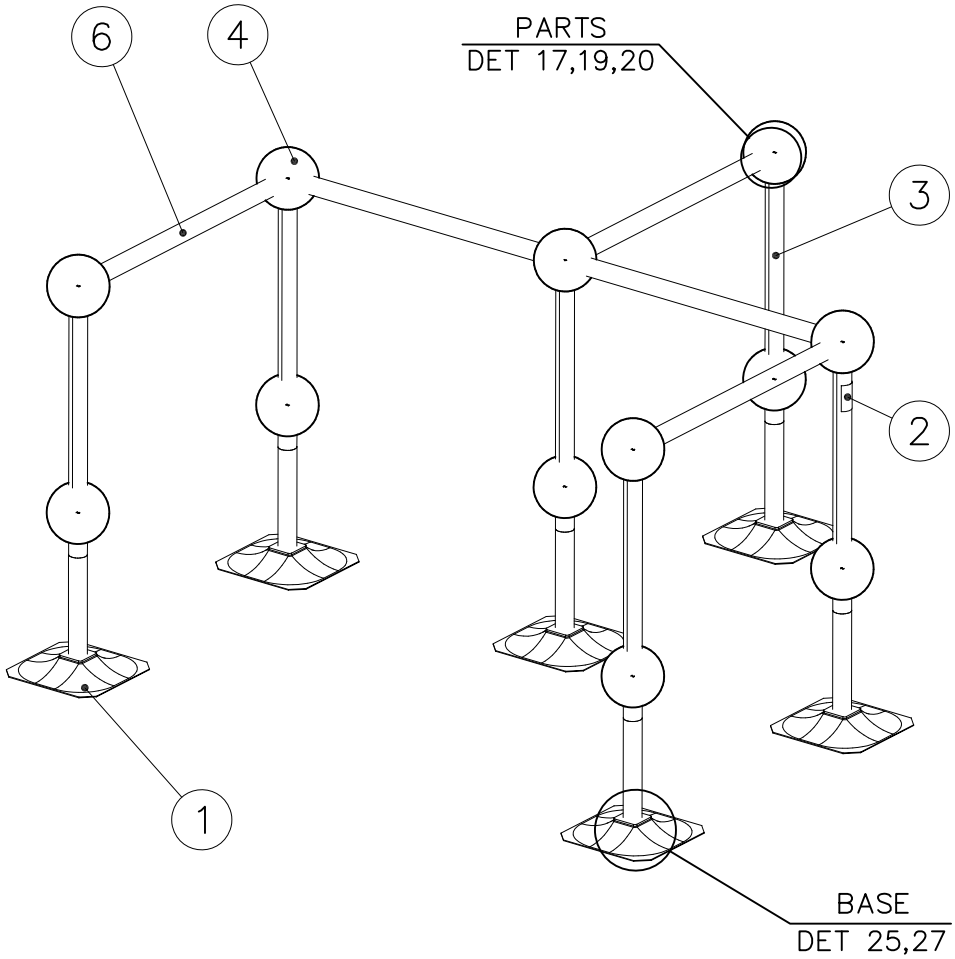

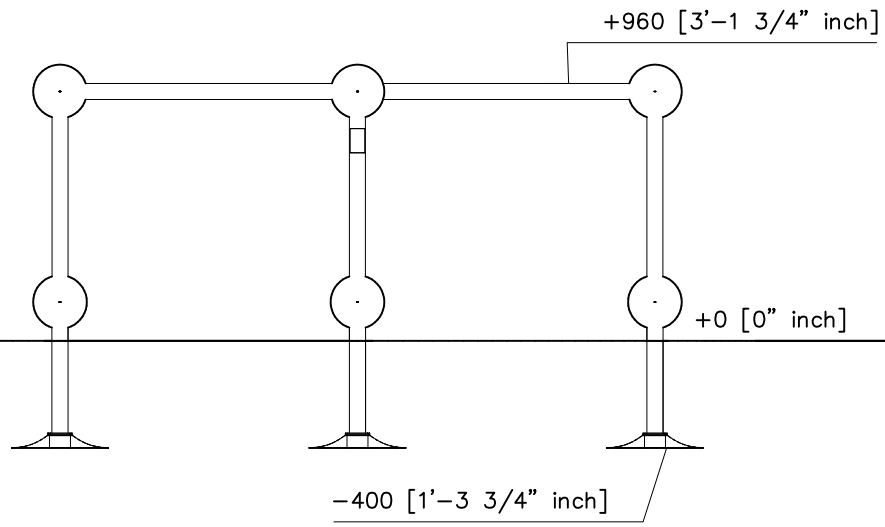

	PCS		PCS
1 701985 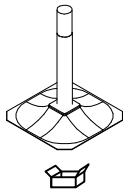	6	2 702341 90x50	1
3 902022 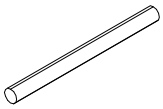 L 710	6	4 902134 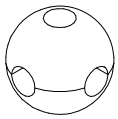	12
5 902157 60x60x2	44	6 902424 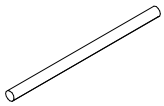 L 1034	5

Copyright Lappset Group Ltd

LAPPSET®

220548

PARKOUR

DATE: 20.6.2019

EN/AS Impact Area 21.9 m2 (235.7 sq ft)
Falling Space Area 21.9 m2 (235.7 sq ft)
Max Falling Height 960 mm (3' – 1 3/4" in)

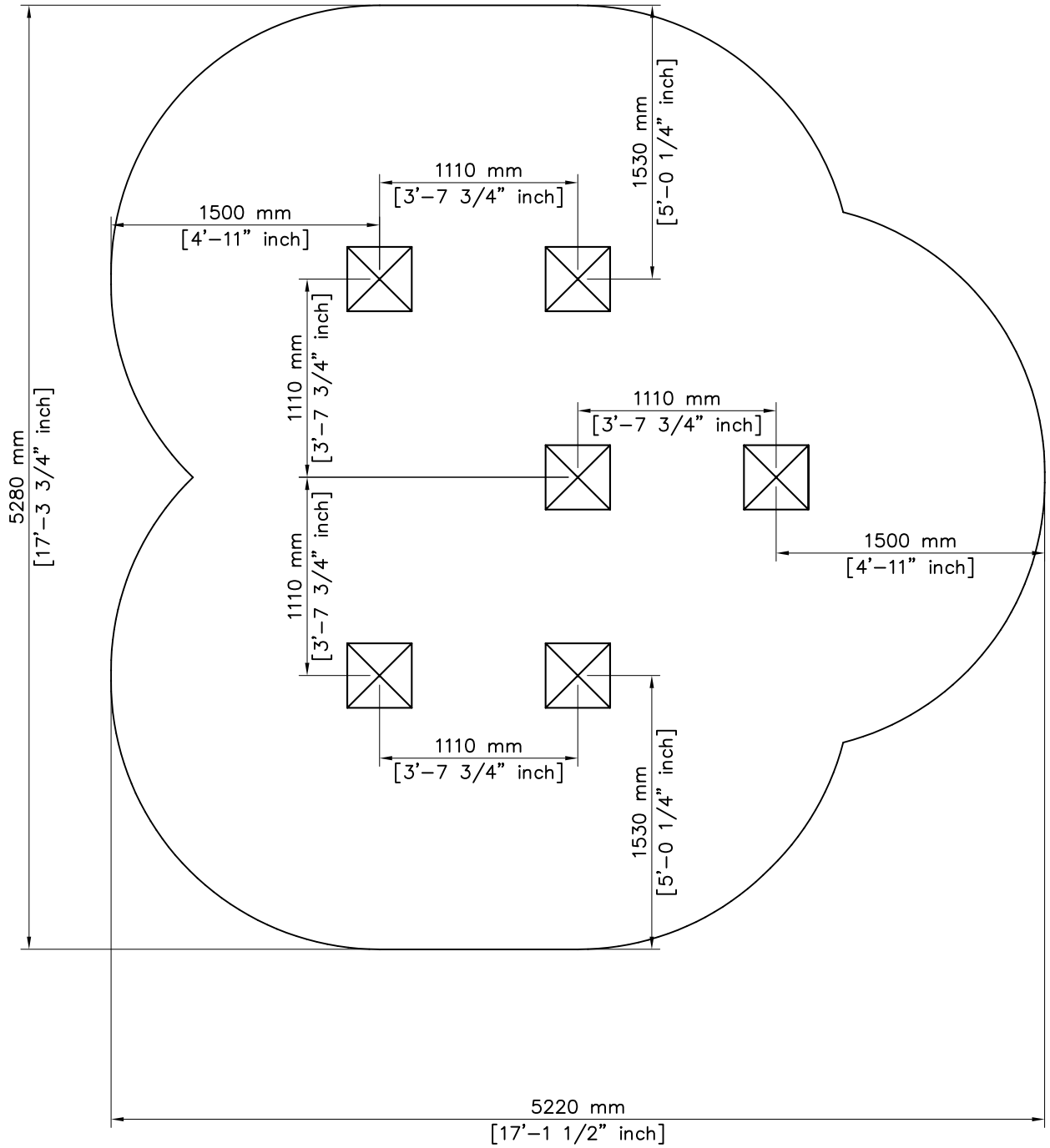

Copyright 1998 Lappset Group Ltd

LAPPSET®

PARKOUR

ASENNUSOHJE
MONTERINGSANSVISNING
INSTALLATION INSTRUCTION
AUFBAUANLEITUNG
NOTICE D'INSTALLATION

REF: 220505
DATE: 21.7.2020

220505

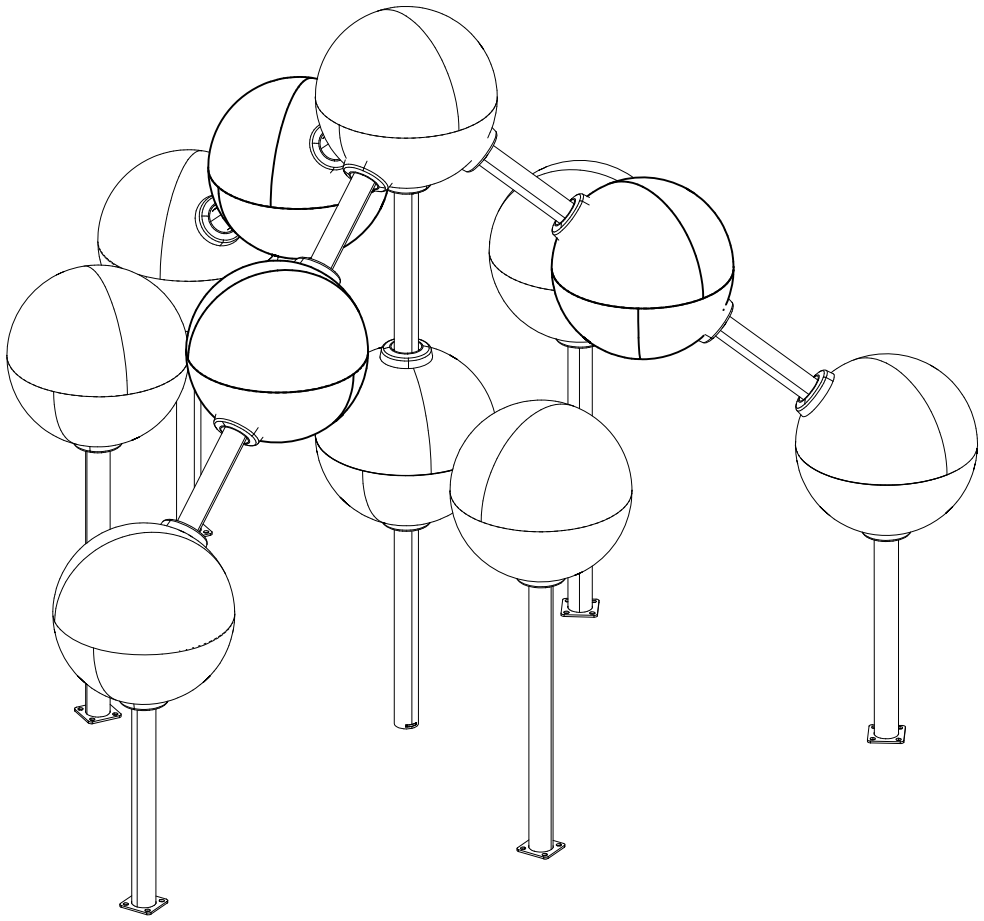

Copyright Lappset Group Ltd

LAPPSET®

PARKOUR

220505

REF: 220505
DATE: 21.7.2020

709770	PCS	709771	PCS	709772	PCS	709773	PCS	908458	PCS	908456	PCS
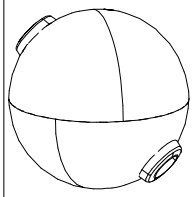	3	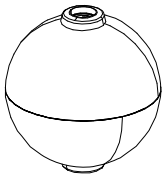	1	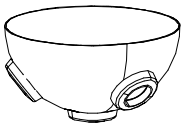	1	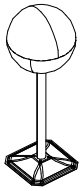	3		1	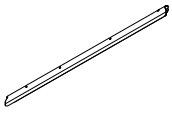	3
Black		Ø450		YELLOW		Ø450		90x90x1934		Ø60x2,5x1500	
908460	PCS	911353	PCS	908455	PCS	904111	PCS	908592	PCS	908593	PCS
	3	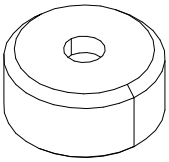	4	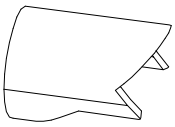	6	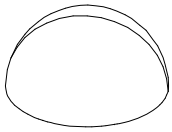	1	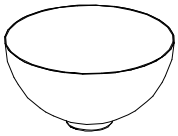	3	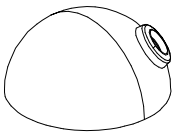	3
90x90x1005		Ø77x36		Ø19x2x26				Ø450x225		Ø450x225	
909639	PCS	909638	PCS	909637	PCS	980151	PCS	909274	PCS	702341	PCS
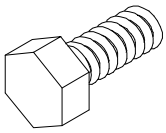	12	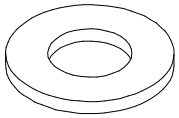	21	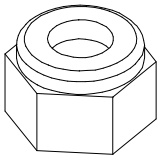	15	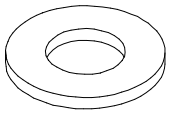	1		1		1
M10x25		Ø20/10.5		M10		Ø16/8.4		M8x30		90x50	
909519	PCS	909868	PCS	911354	PCS	709910	PCS	903238	PCS		PCS
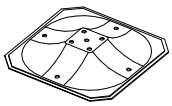	4	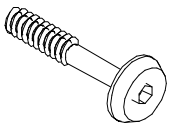	1		3		1	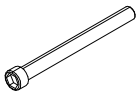	3		
50x380x380		M8x50		M8x90		M8x85		M10x140			
	PCS		PCS		PCS		PCS		PCS		PCS
	PCS		PCS		PCS		PCS		PCS		PCS
	PCS		PCS		PCS		PCS		PCS		PCS

Copyright Lappset Group Ltd

LAPPSET®

PARKOUR

220505

REF: 220505
DATE: 21.7.2020

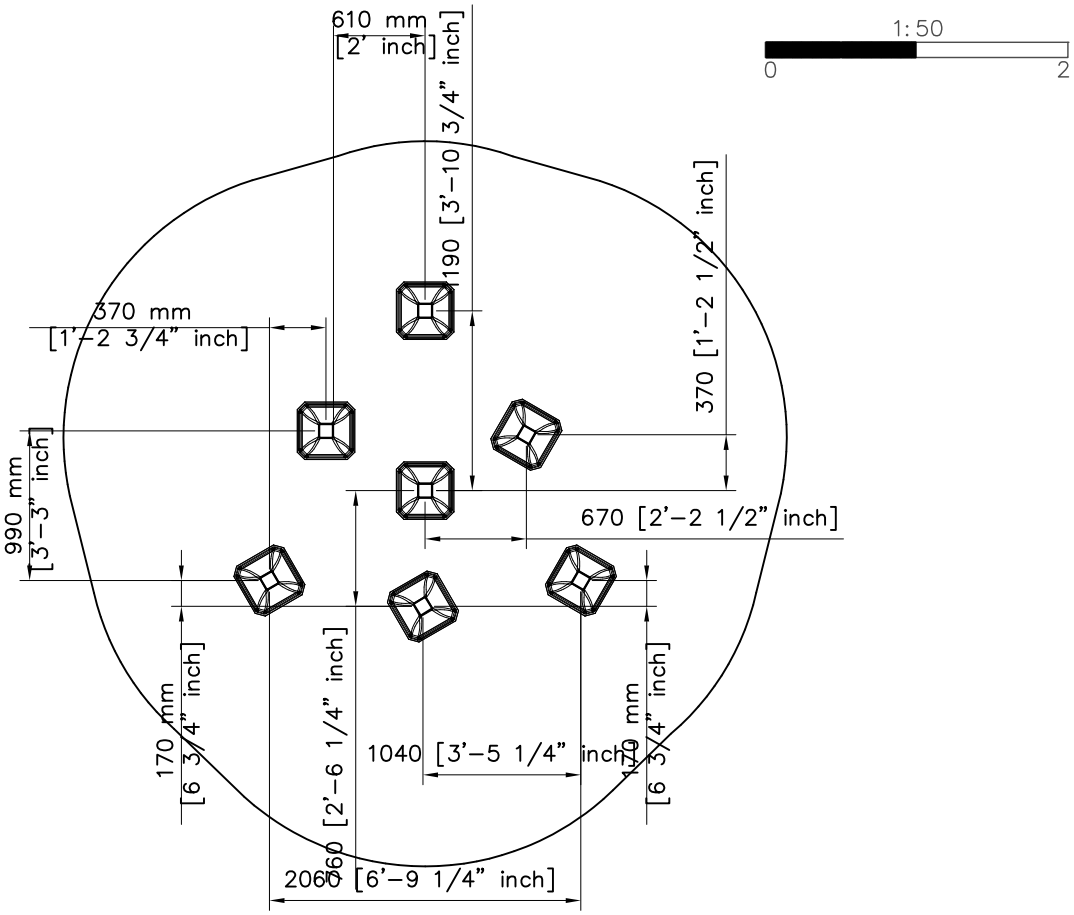

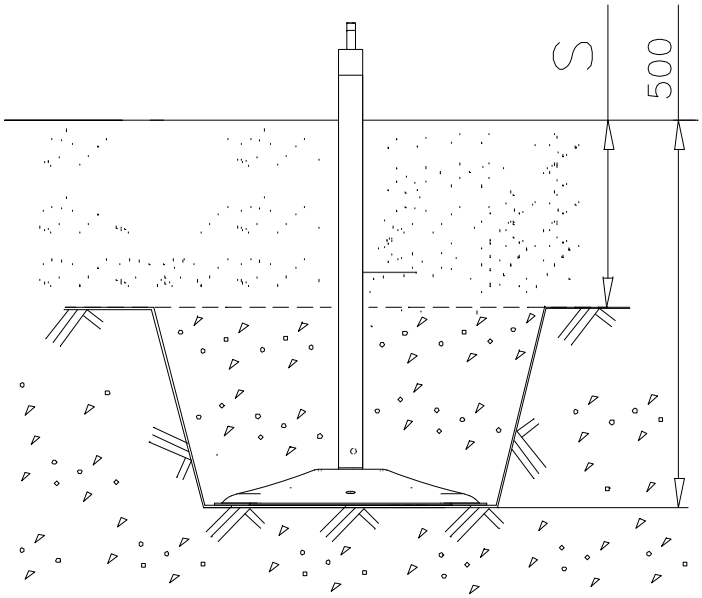

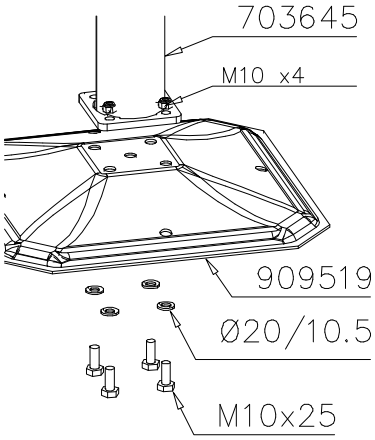

Copyright Lappset Group Ltd

LAPPSET®

PARKOUR

220505

REF: 220505
DATE: 17.6.2022

EN Impact Area 17.7 m2 (194 sq ft)
---- Falling Space 22 m2 (234 sq ft)
Max falling height 1510 mm. (4'–11 1/2" in)

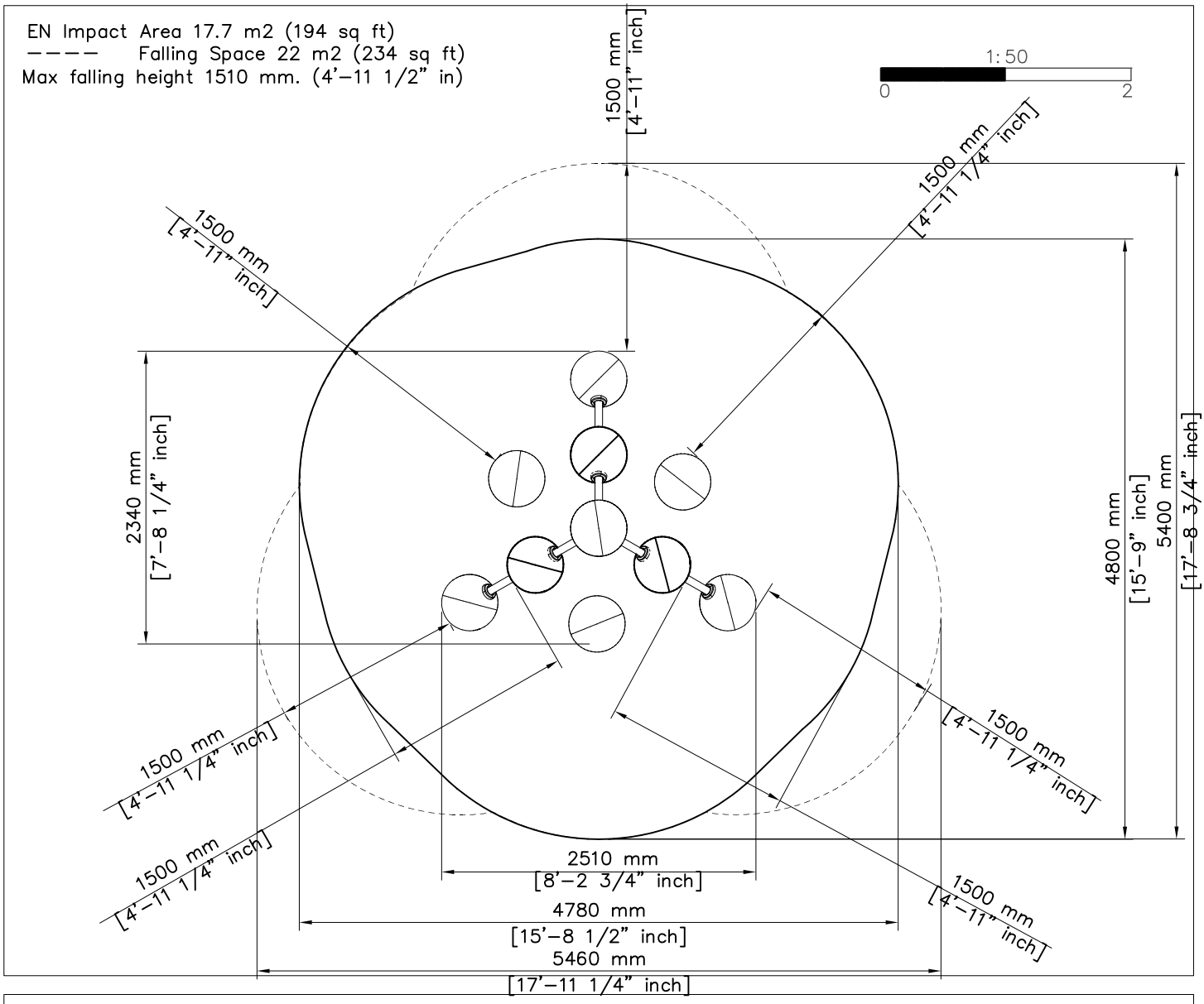

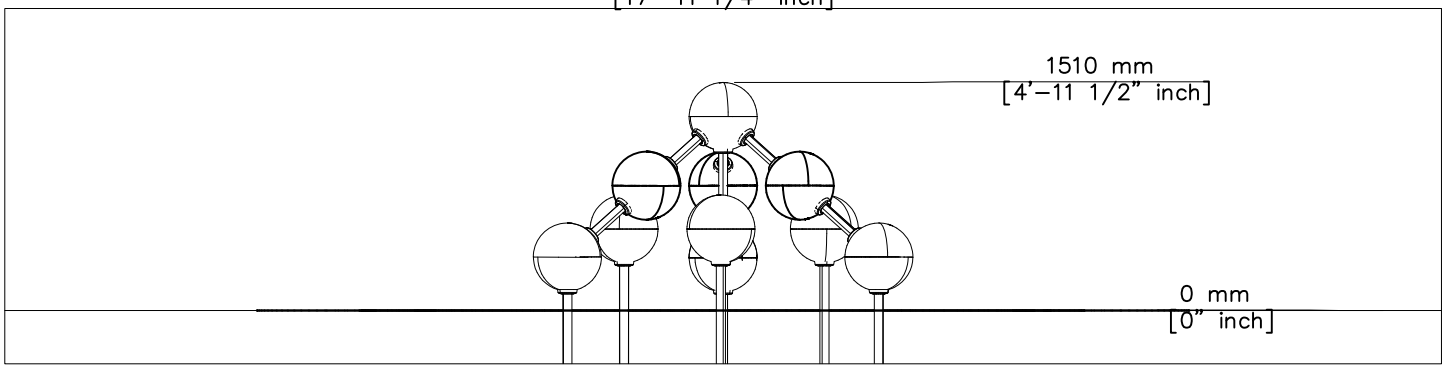

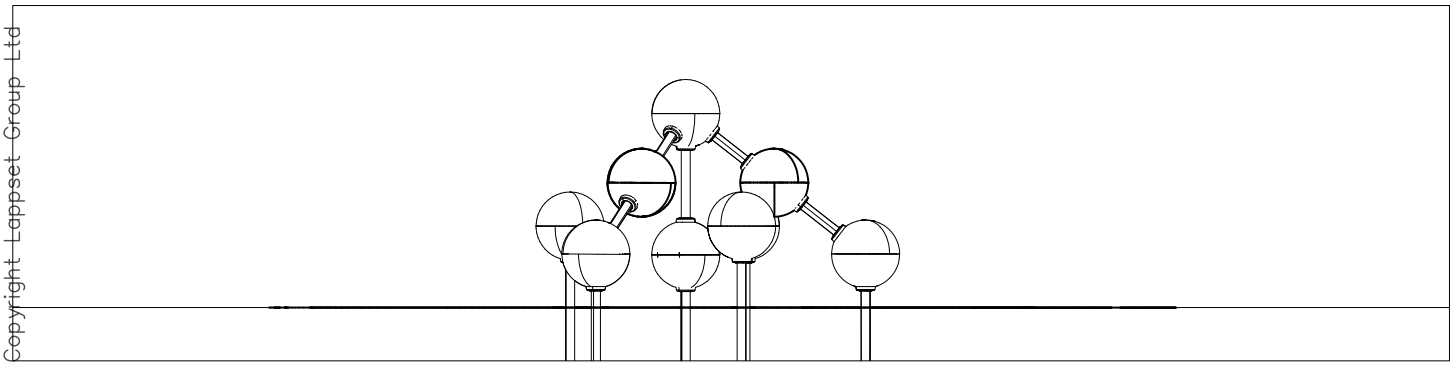

Copyright Lappset Group Ltd

LAPPSET®
PARKOUR

220505

REF: 220505
DATE: 17.6.2022

AS Impact Area 22 m2 (234 sq ft)
Max falling height 1510 mm. (4'–11 1/2" in)

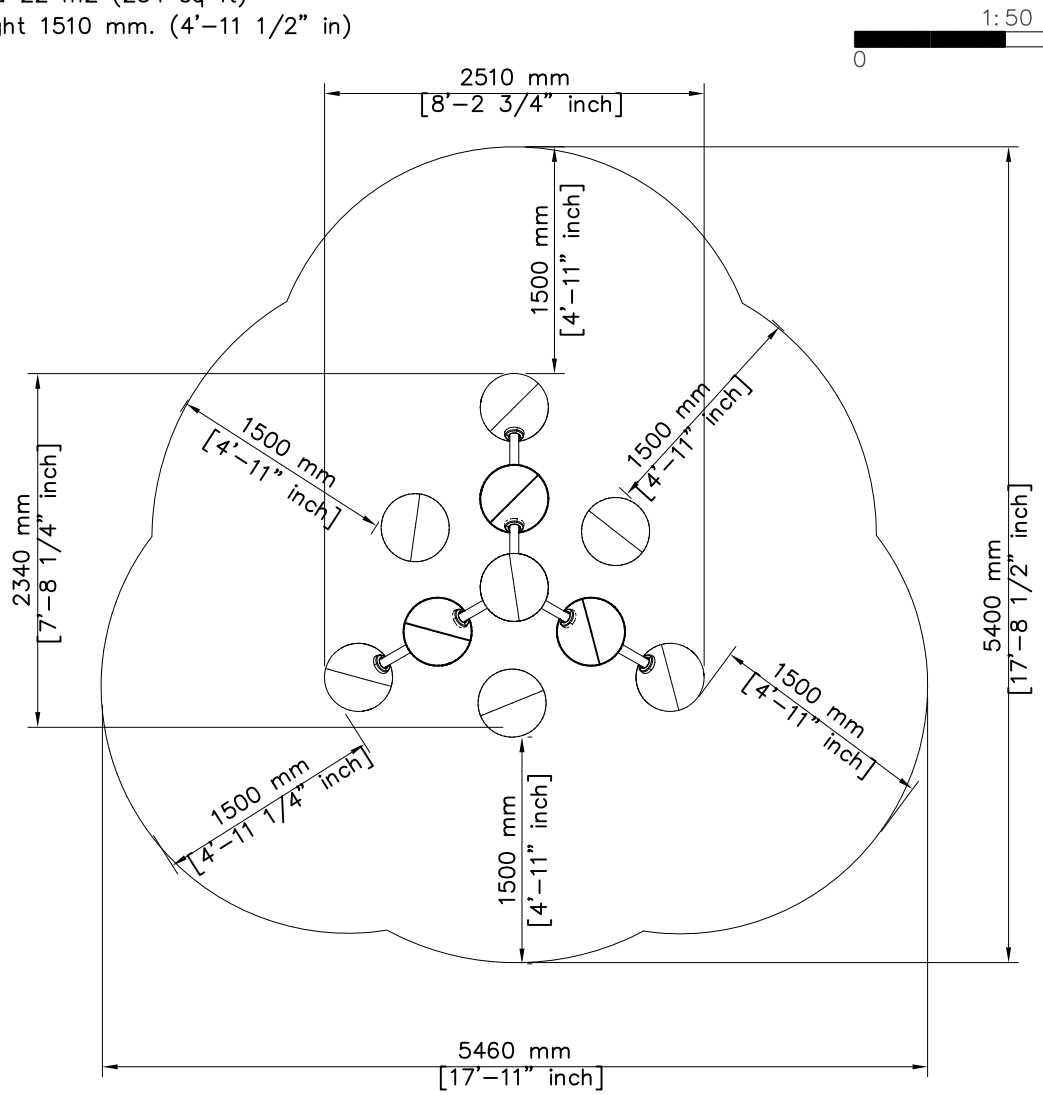

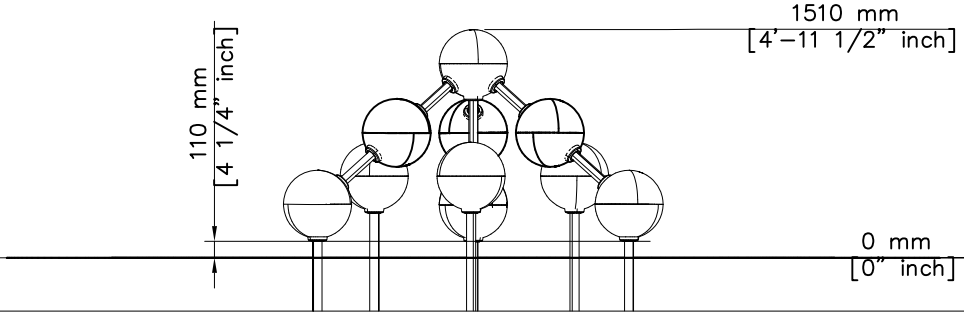

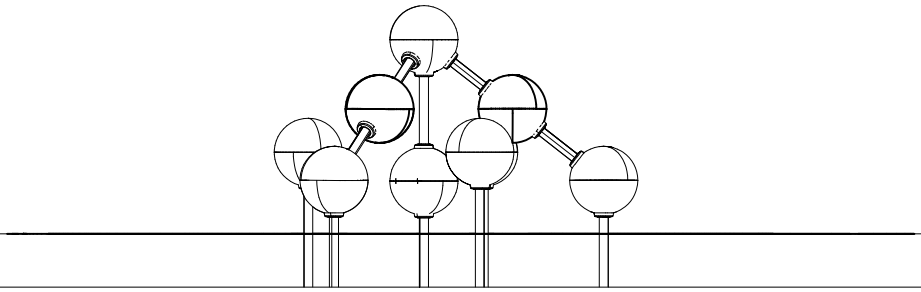

Copyright Lappset Group Ltd

LAPPSET®

PARKOUR

220505

REF: 220505
DATE: 21.7.2020

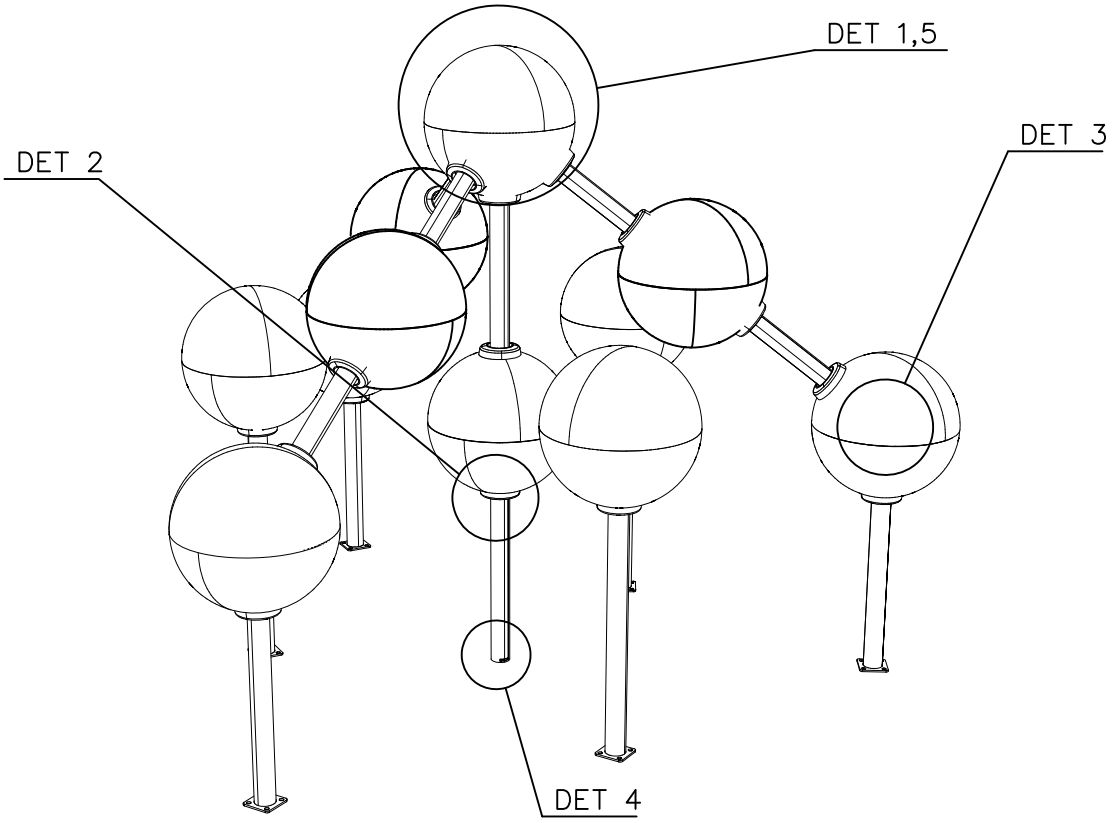

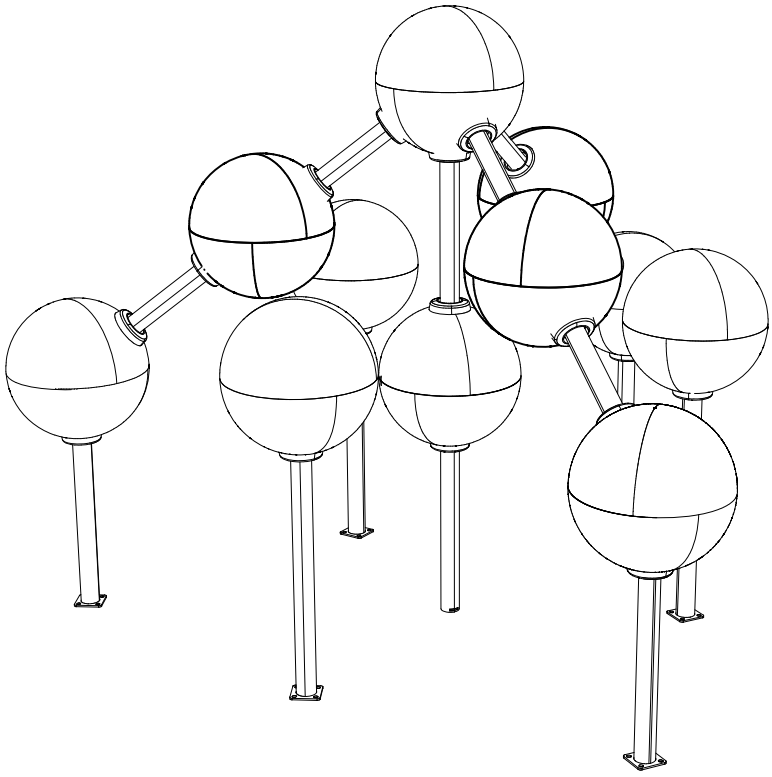

Copyright Lappset Group Ltd

LAPPSET®
PARKOUR

220505

REF: 220505
DATE: 21.7.2020

6A

DET 1

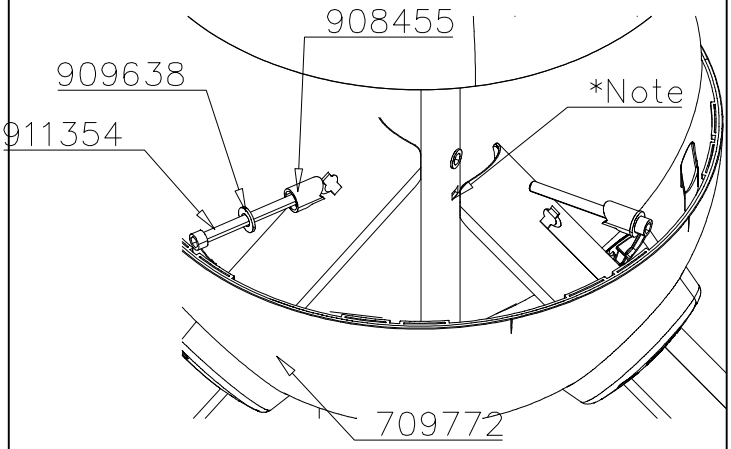

DET 2

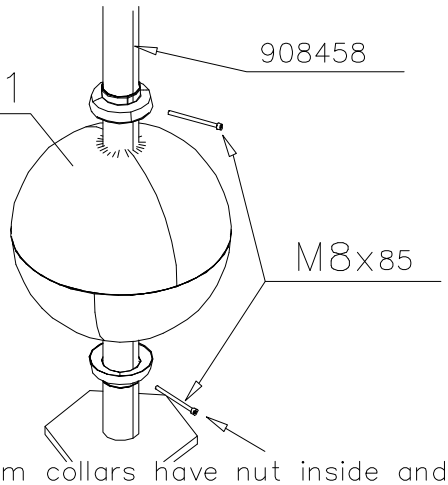

The bolts M8x85 are included in the collars. The one loose M8x85 bolt is for the ball half 709772.

The aluminium collars have nut inside and the tubes have holes in them for correct placement of the balls on the structure.

DET 3

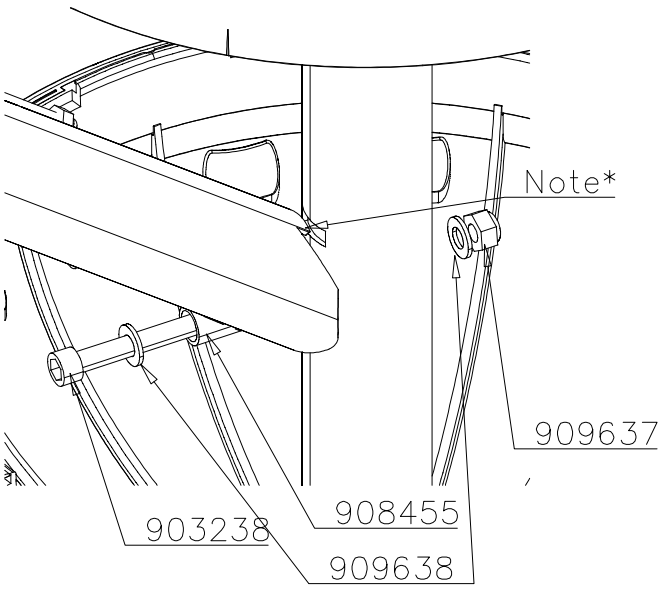

DET 4

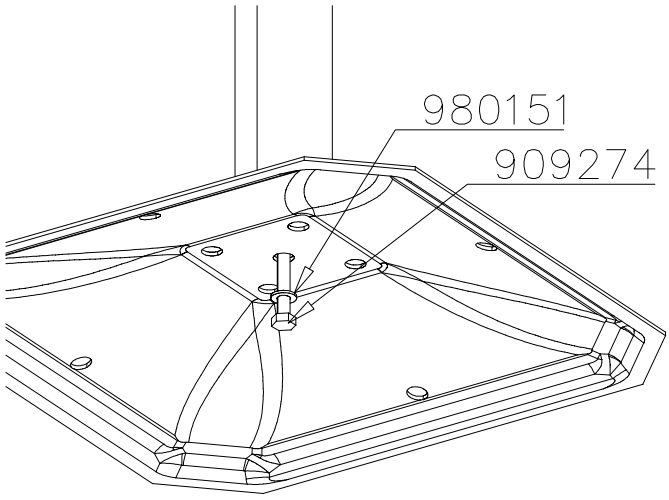

DET 5

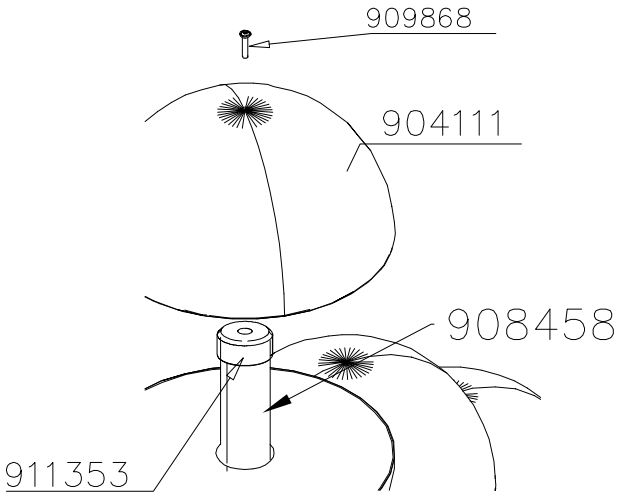

*Note

The wide "teeth" of tube 908456 goes downwards to element 908460, and thinner "teeth" upwards to middle tube

Slide the ball half 709772 from the foundation side of the center tube in place, then the middle ball 709771, and finally install the foundation foot.

911353 is placed on top of 908458 and tubes 908460

Copyright Lappset Group Ltd

LAPPSET®

PARKOUR

220505

REF: 220505
DATE: 21.7.2020

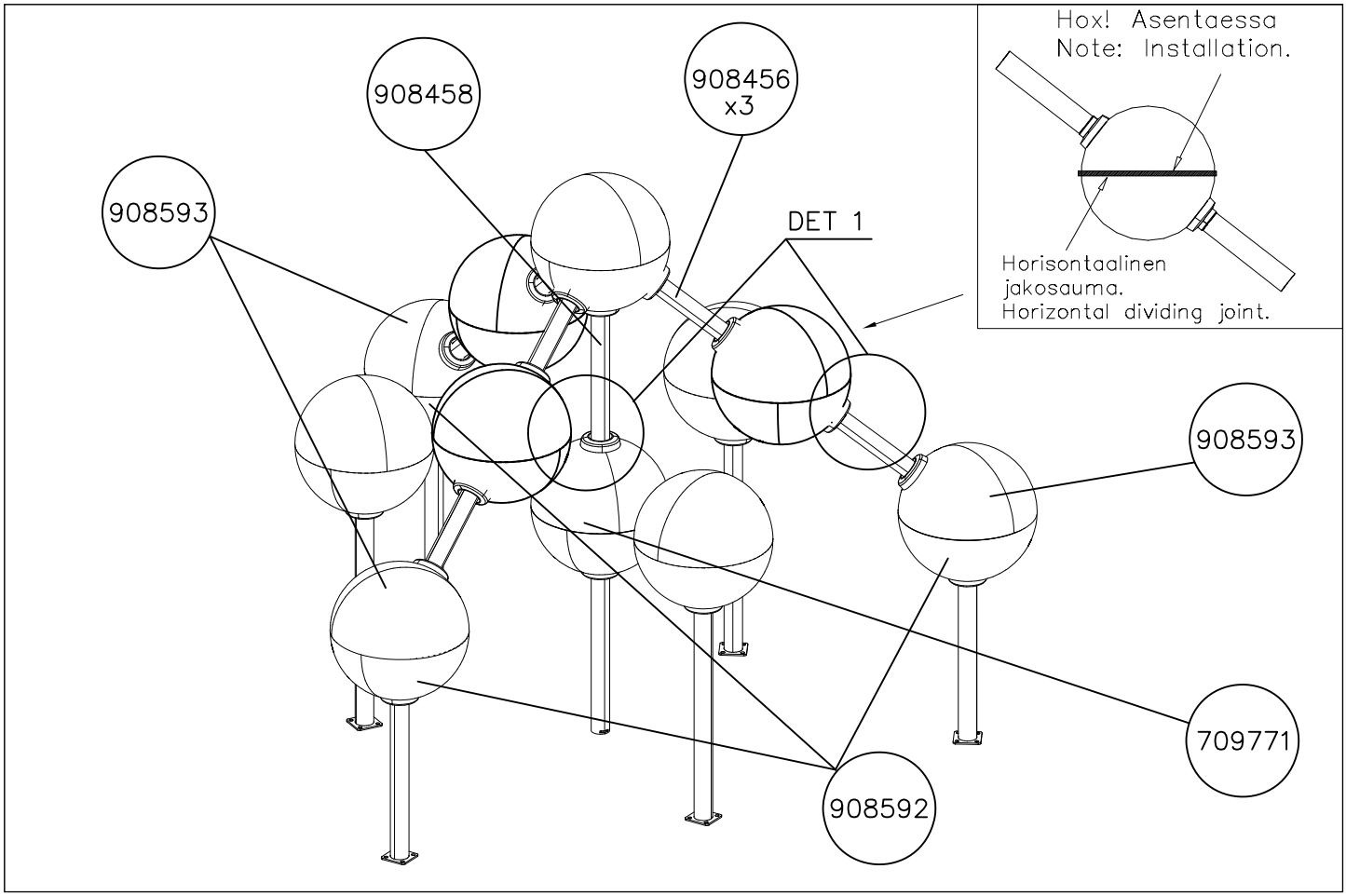

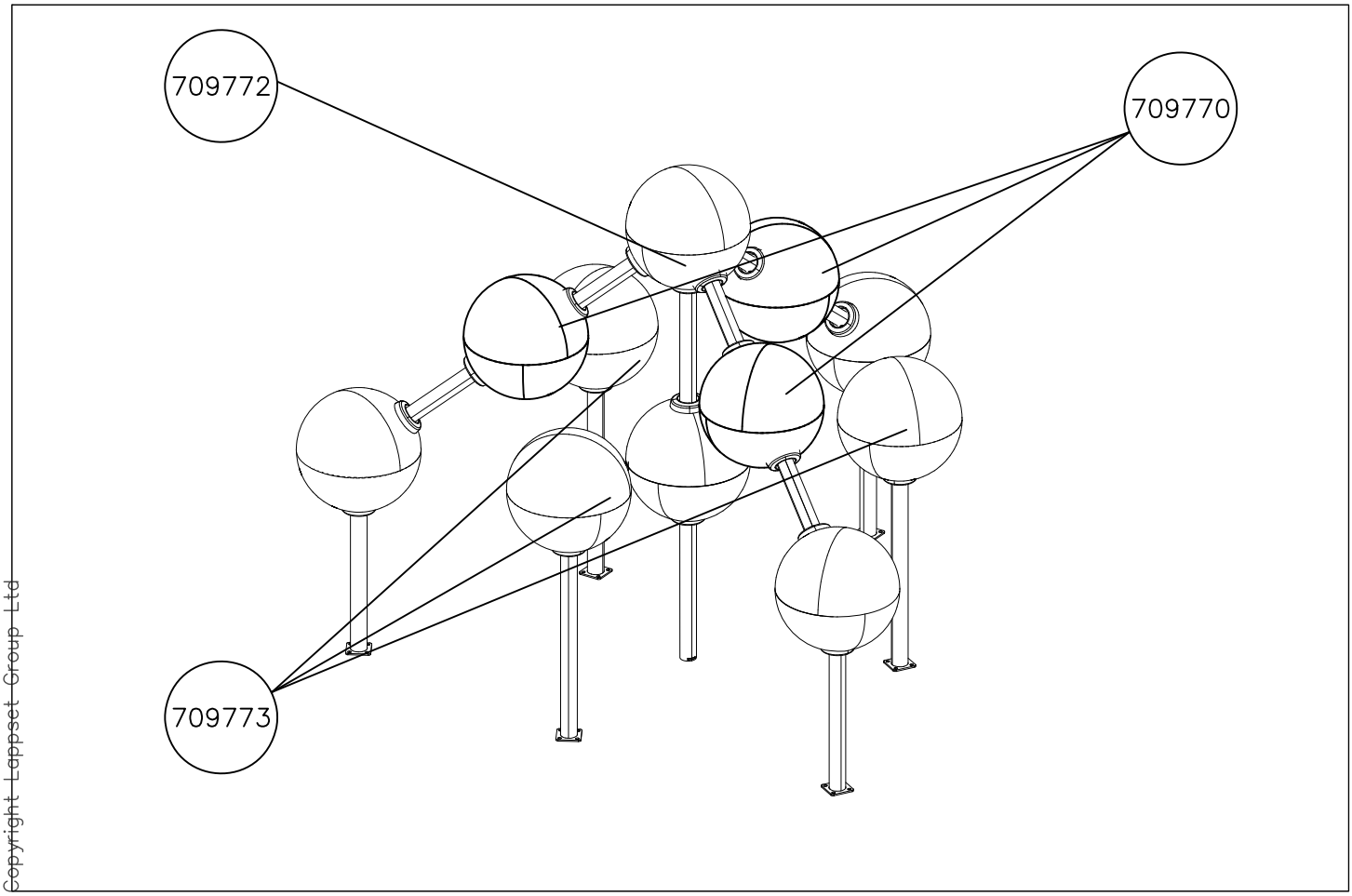

Copyright Lappset Group Ltd

LAPPSET®

PARKOUR

ASENNUSOHJE
MONTERINGSANSVISNING
INSTALLATION INSTRUCTION
AUFBAUANLEITUNG
NOTICE D'INSTALLATION

DATE: 23.2.2015

220531

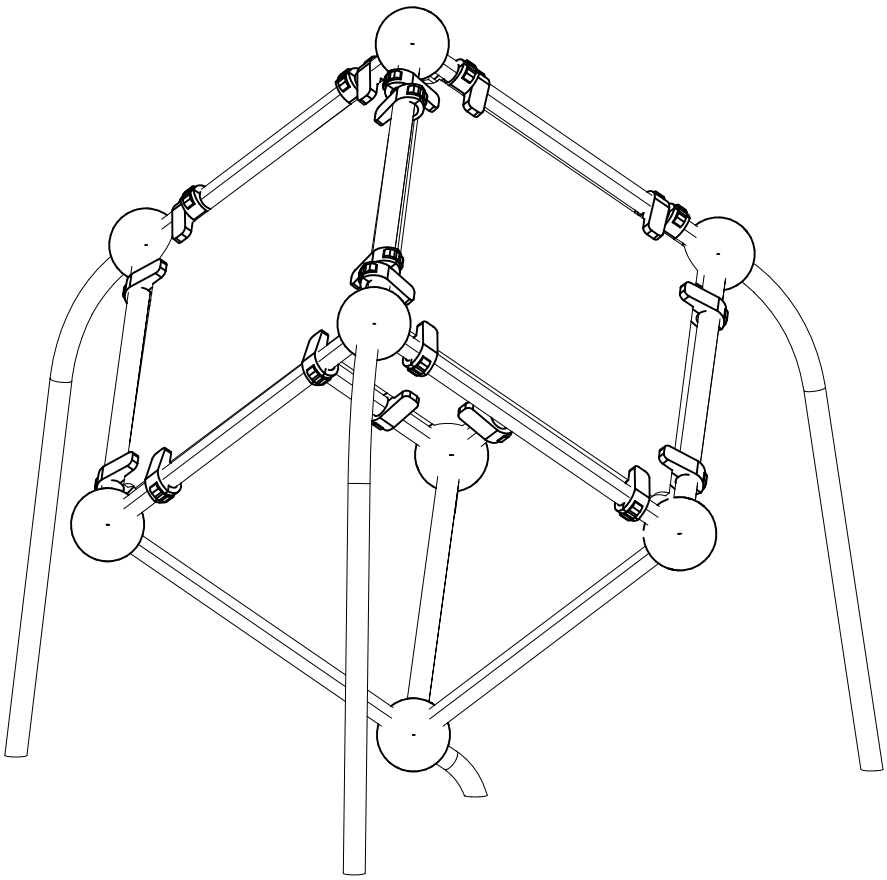

Copyright Lappset Group Ltd

LAPPSET®

PARKOUR

220531

3

DATE: 23.2.2015

702341	PCS	703456	PCS	703459	PCS	703638	PCS	703640	PCS	902134	PCS
	1	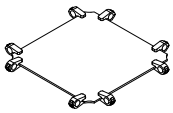	2	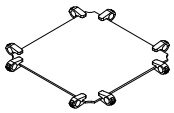	1	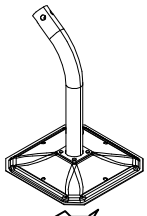	1		3	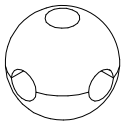	8
90x50											
904747	PCS	902424	PCS		PCS		PCS		PCS		PCS
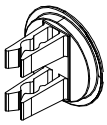	20	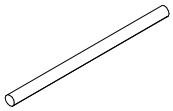	12								
60x60x2		L 1034									
	PCS		PCS		PCS		PCS		PCS		PCS
	PCS		PCS		PCS		PCS		PCS		PCS
	PCS		PCS		PCS		PCS		PCS		PCS
	PCS		PCS		PCS		PCS		PCS		PCS
	PCS		PCS		PCS		PCS		PCS		PCS

Copyright Lappset Group Ltd

LAPPSET®

PARKOUR

220531

DATE: 23.2.2015

4

EN/AS Impact Area 17.8 m2 (192 sq ft)
Falling Space Area 17.8 m2 (192 sq ft)
Grid size = 500 mm (20" in)

1:50
0 2

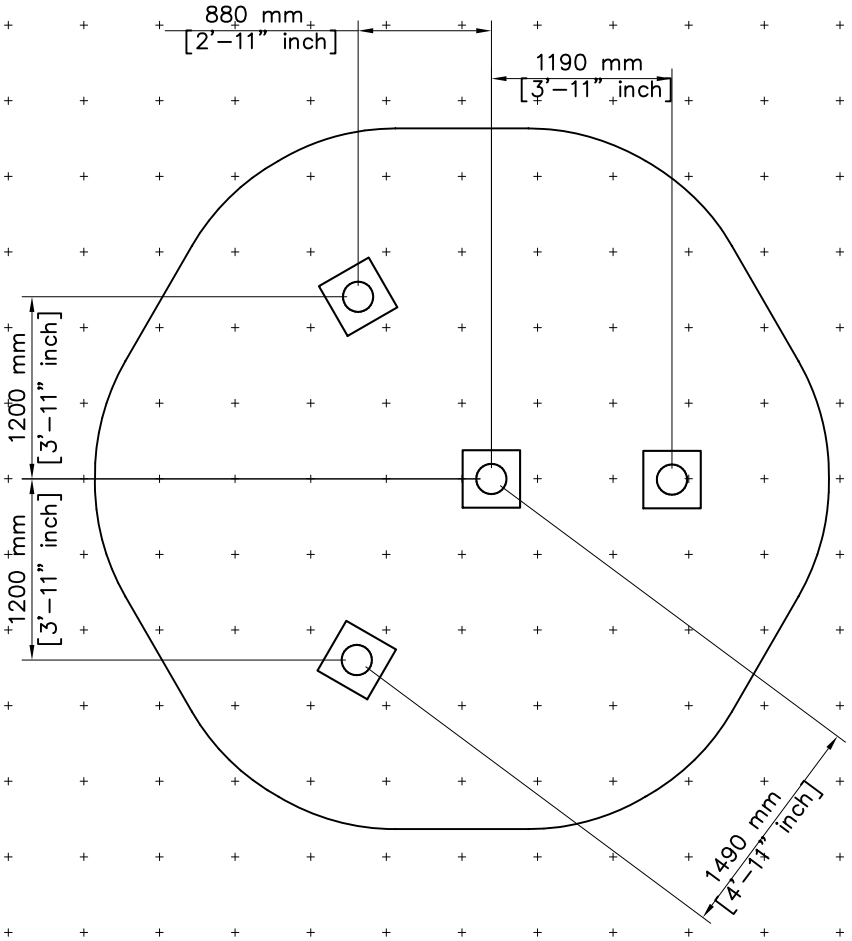

Copyright Lappset Group Ltd

LAPPSET®
PARKOUR

220531

DATE: 23.2.2015

EN Impact Area 17.8 m2 (192 sq ft)
Falling Space Area 17.8 m2 (192 sq ft)
Max Falling Height 2190 mm (7'–2" in)

1:50
0 2

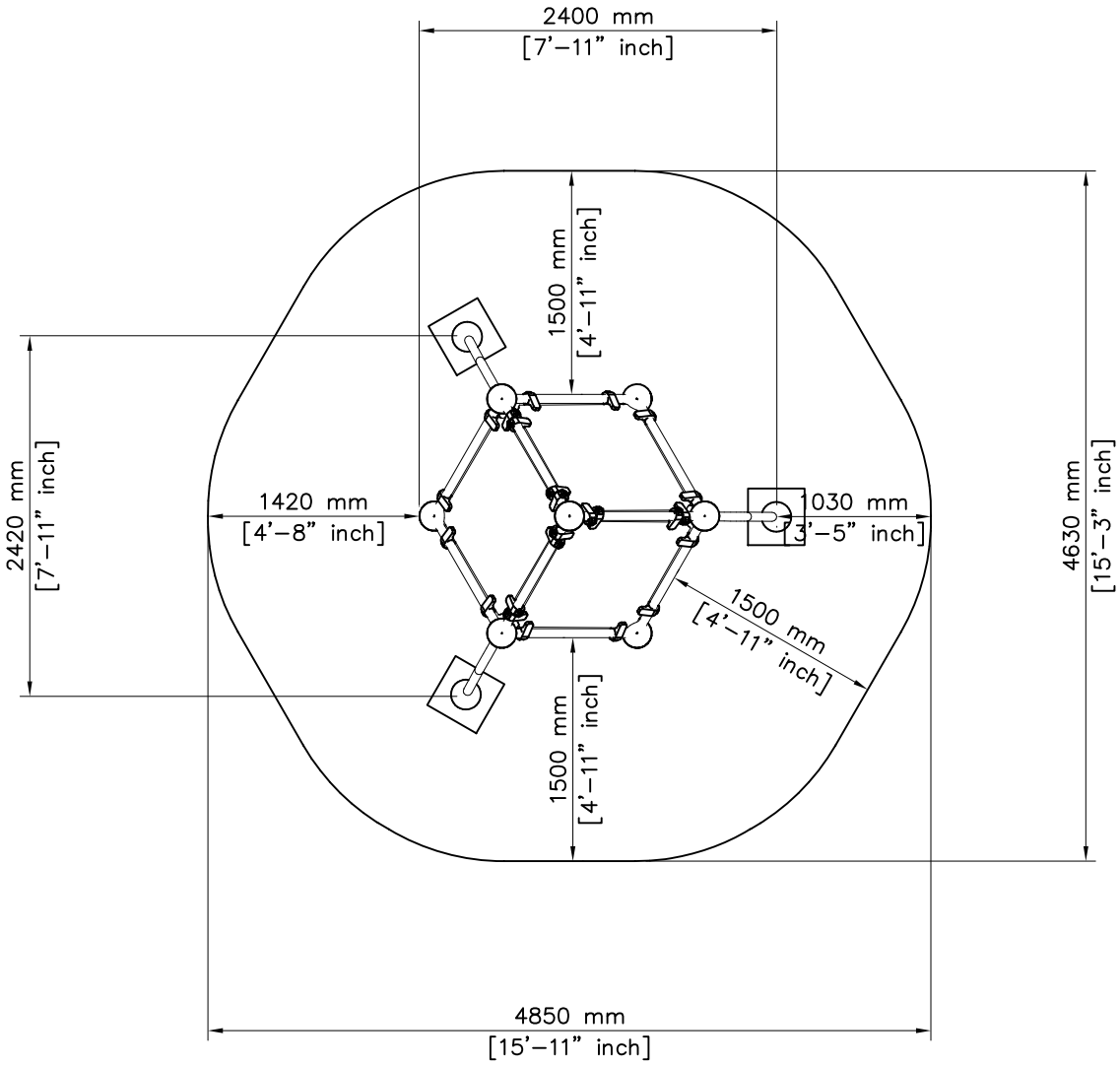

Copyright Lappset Group Ltd

LAPPSET®

PARKOUR

220531

DATE: 23.2.2015

5A

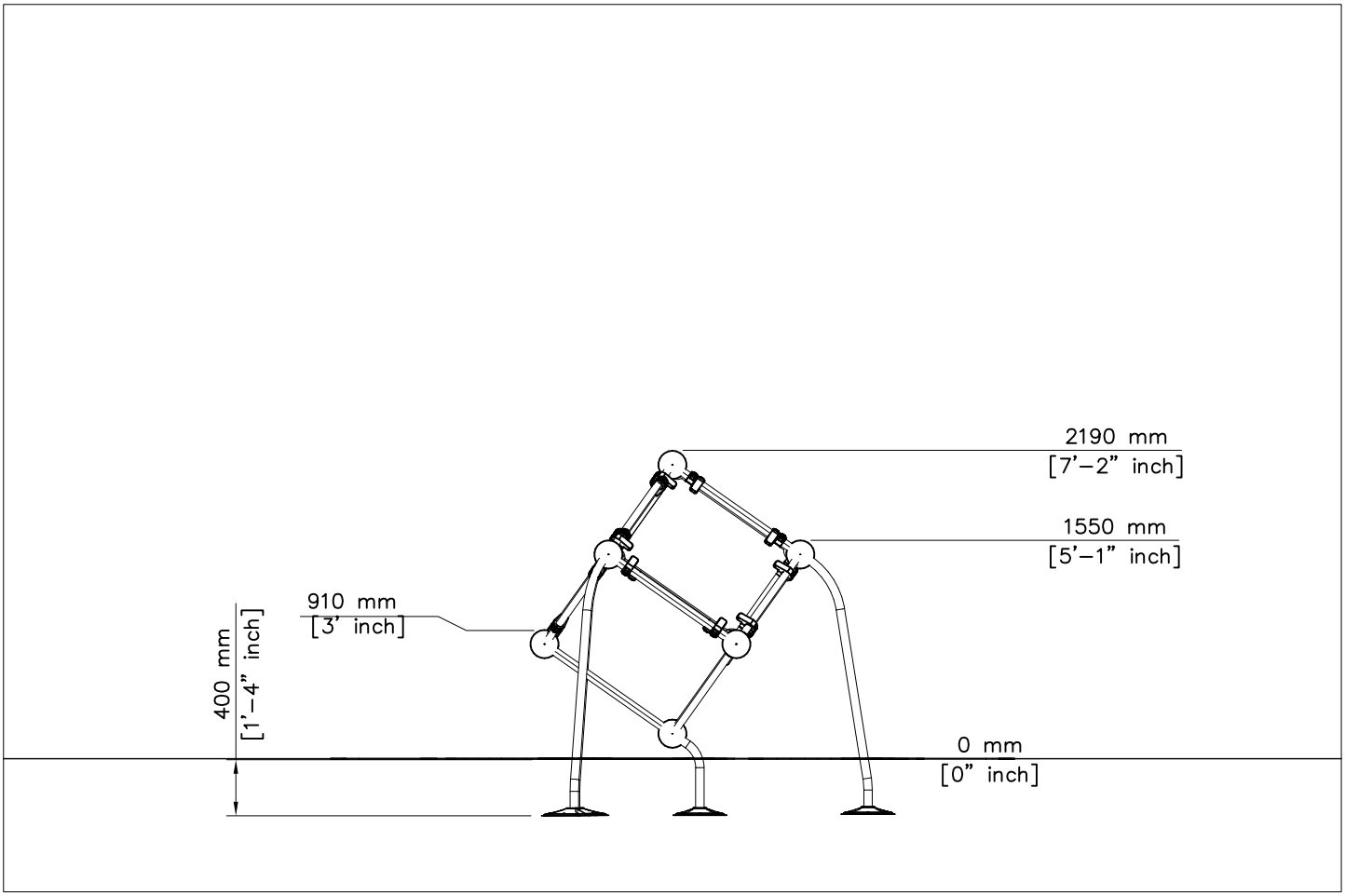

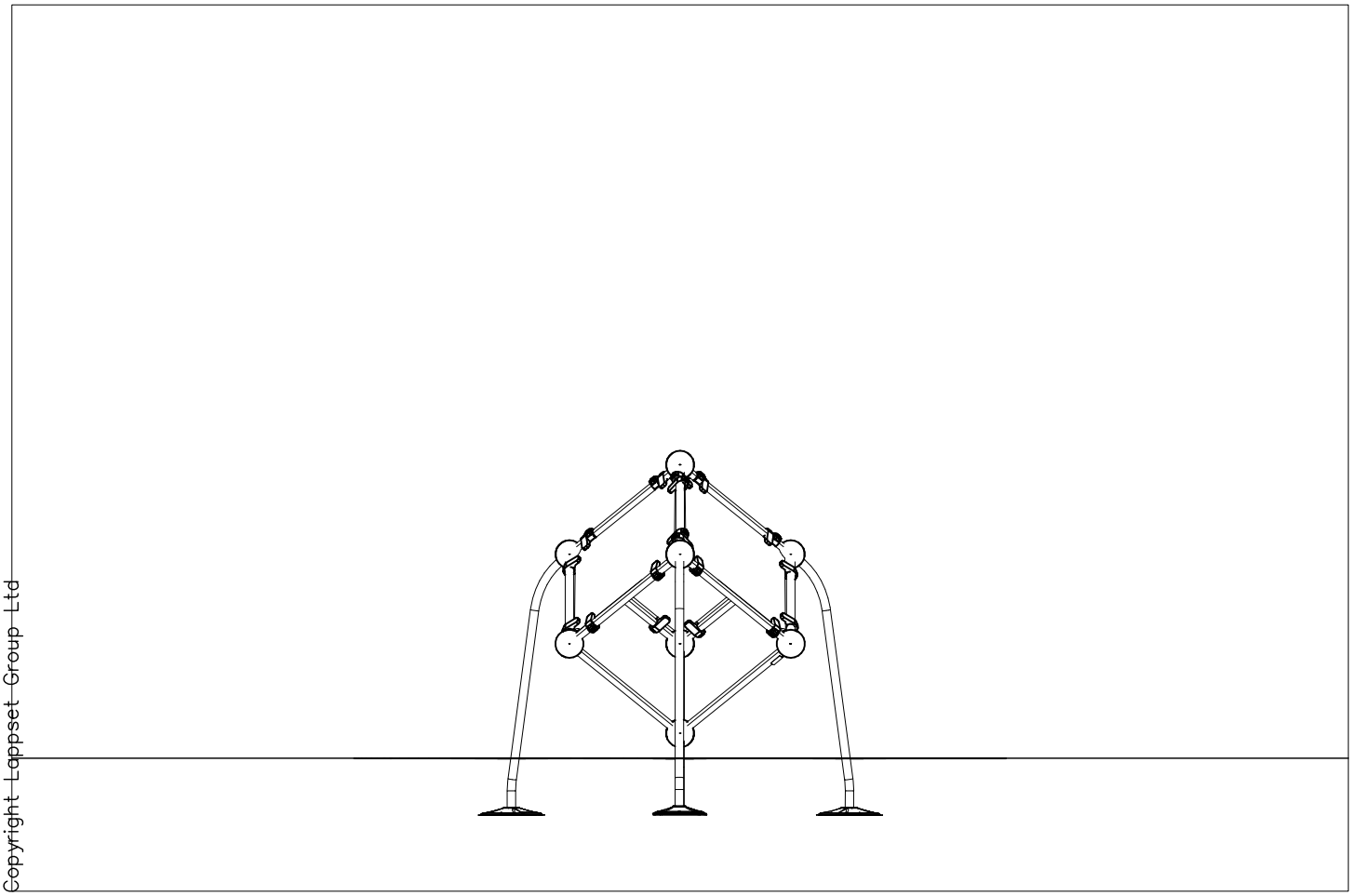

Copyright Lappset Group Ltd

LAPPSET®

PARKOUR

220531

DATE: 23.2.2015

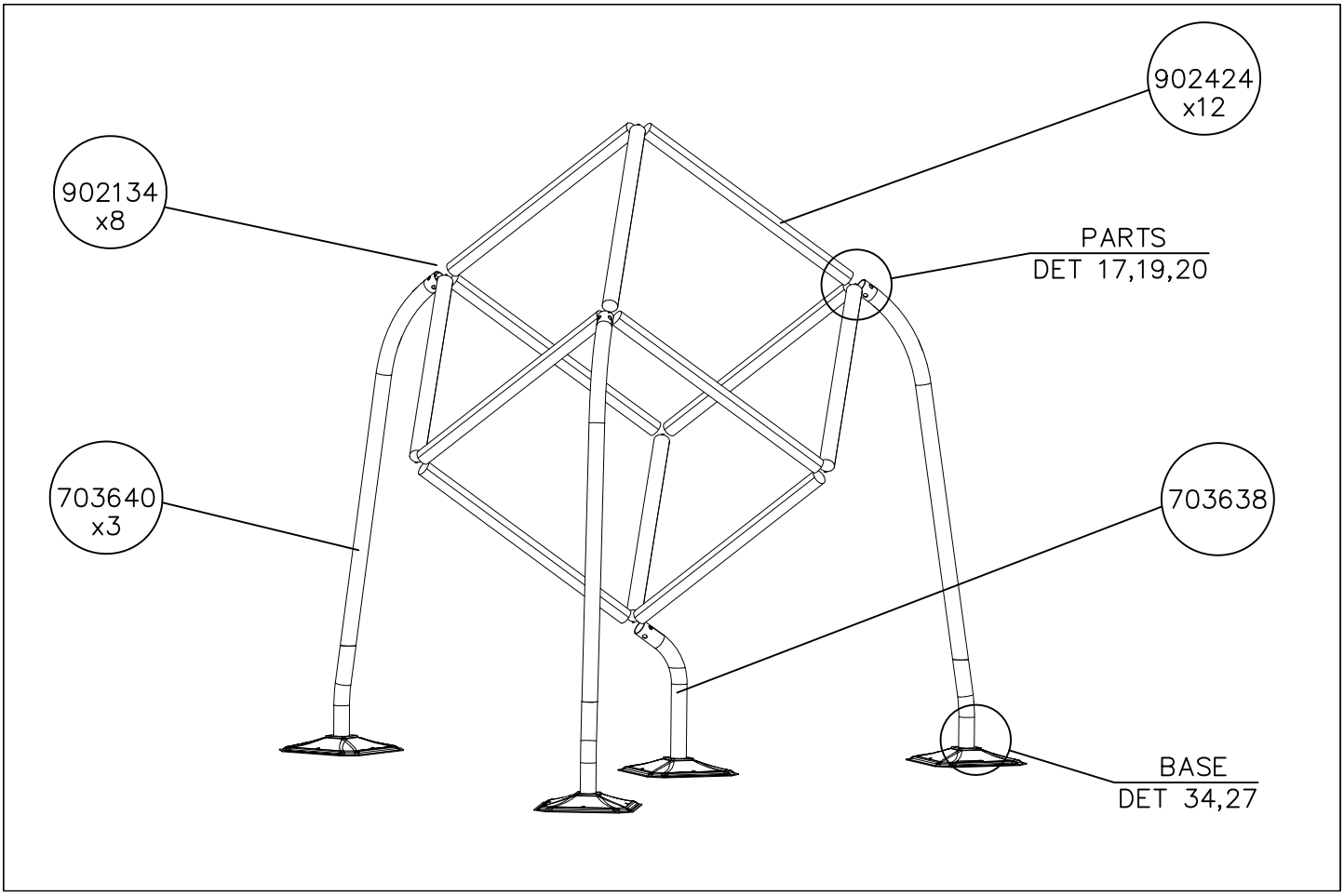

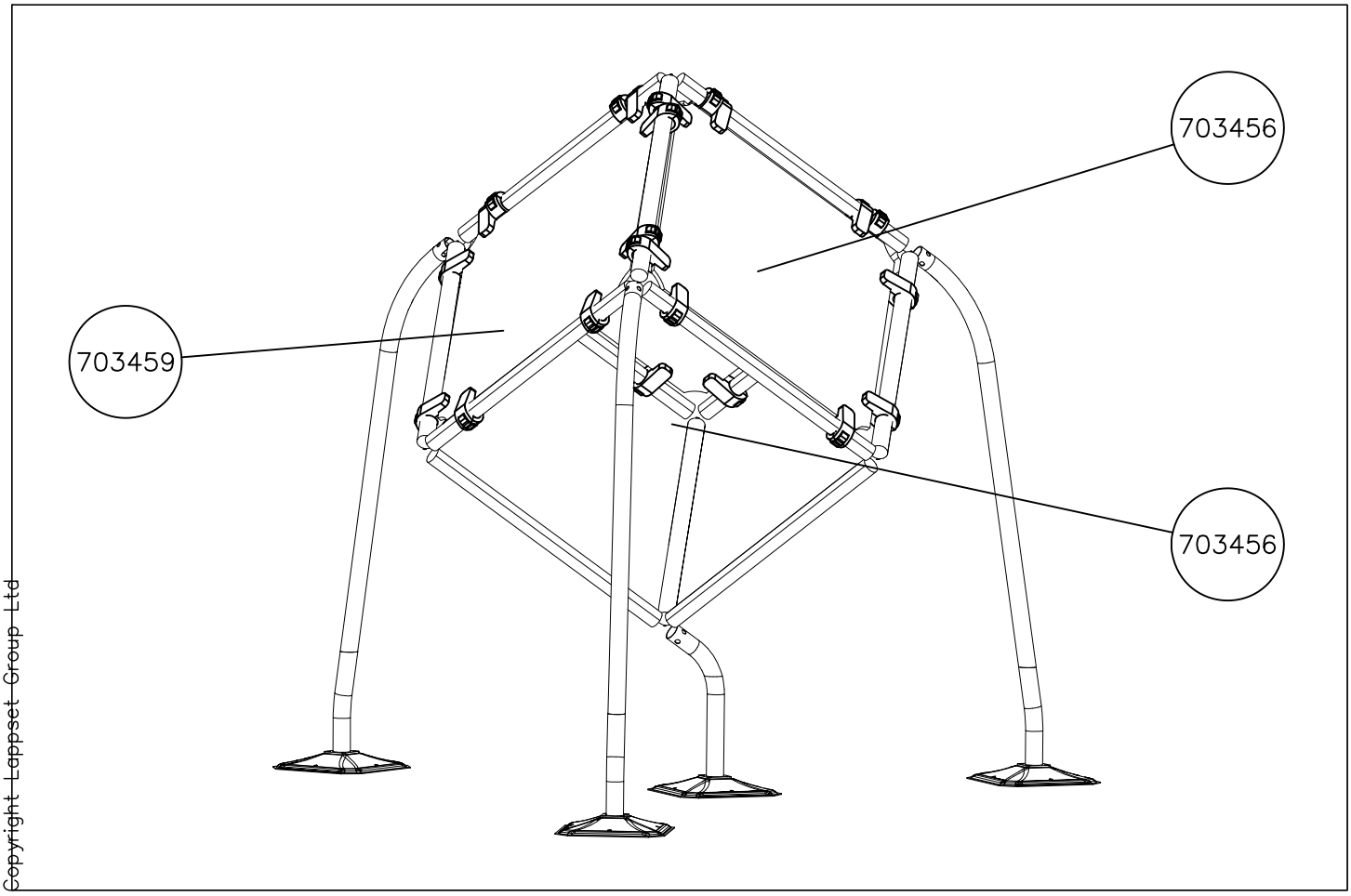

Copyright Lappset Group Ltd

LAPPSET®

PARKOUR

220531

DATE: 23.2.2015

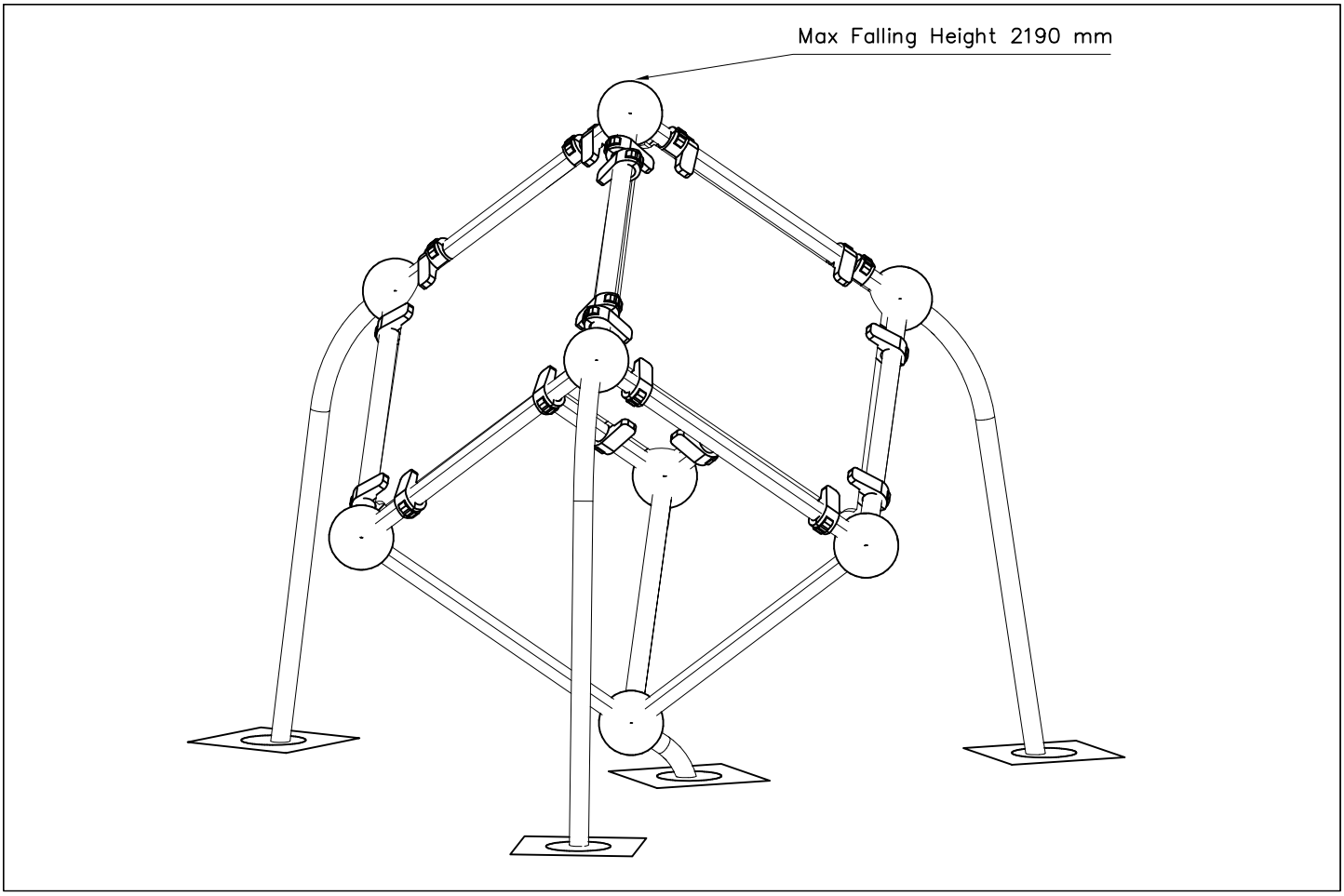

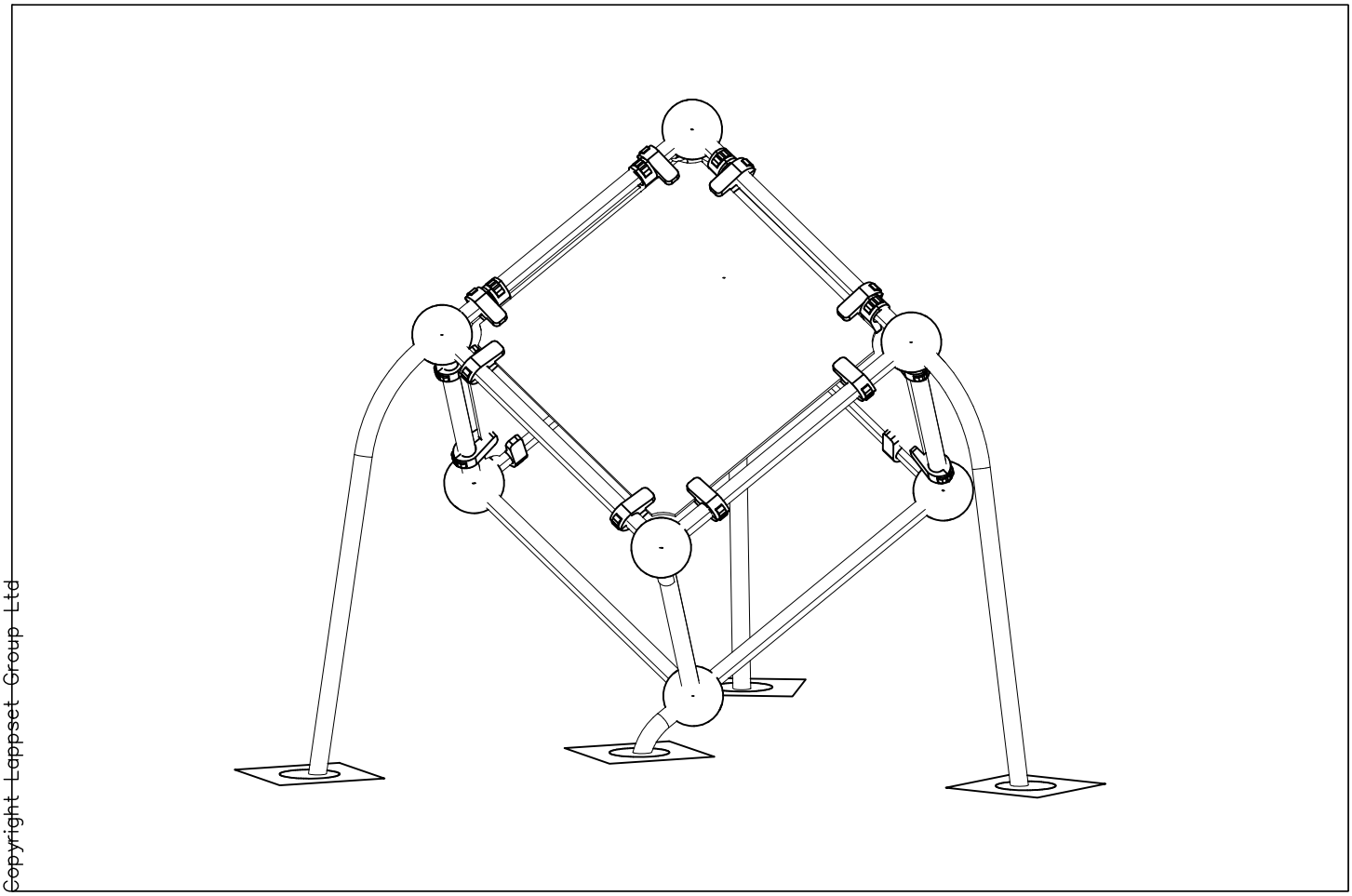

Copyright Lappset Group Ltd

LAPPSET®

220502

PARKOUR

DATE: 13.2.2013

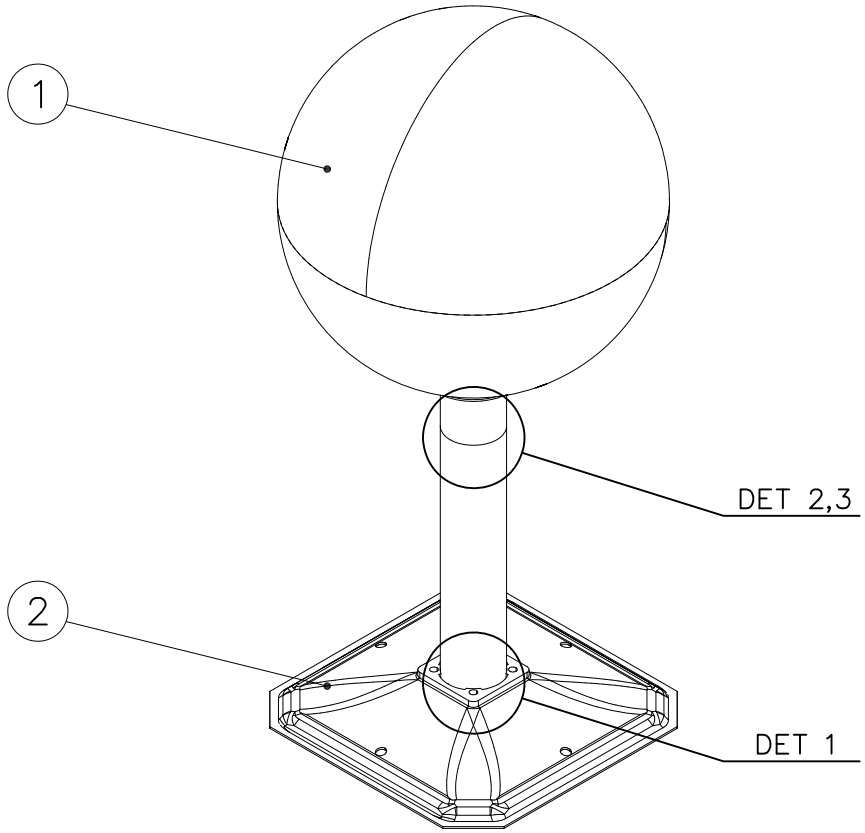

		PCS
1	703644	1
2	909519 380x380	1
3	909638 Ø20/10.5	4
4	909639 M10x25	4
5	702341	1
6	909637 M10	4

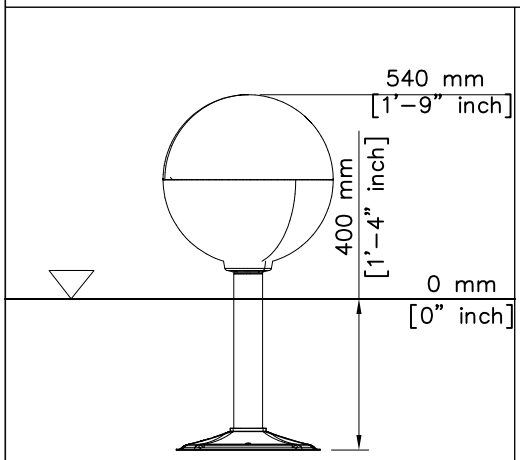

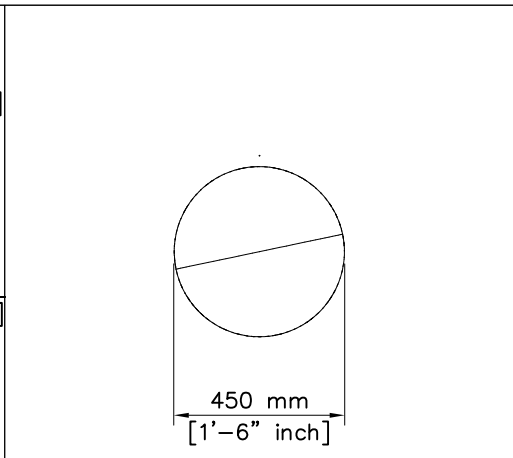

DET 1

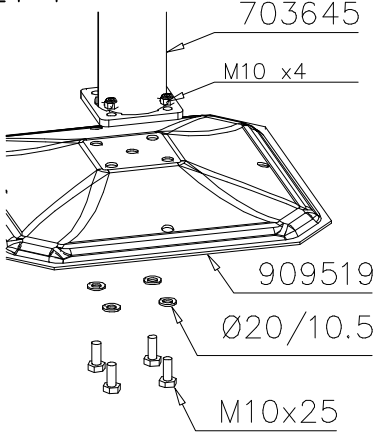

DET 2

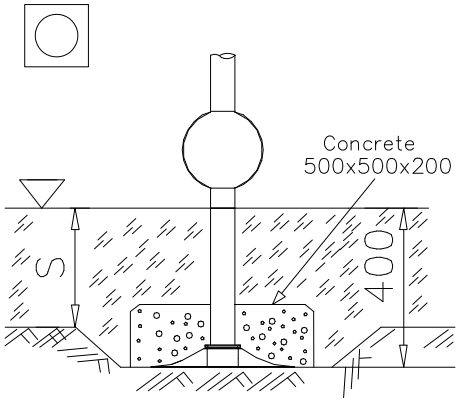

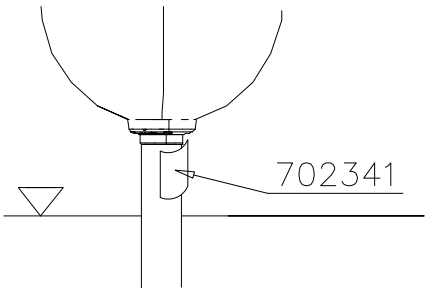

Copyright Lappset Group Ltd

LAPPSET®

220502

PARKOUR

DATE: 13.3.2013

---- Falling Space 9.3 m2 (100 sq ft)
Max Falling Height 540 mm (1'–9" in)

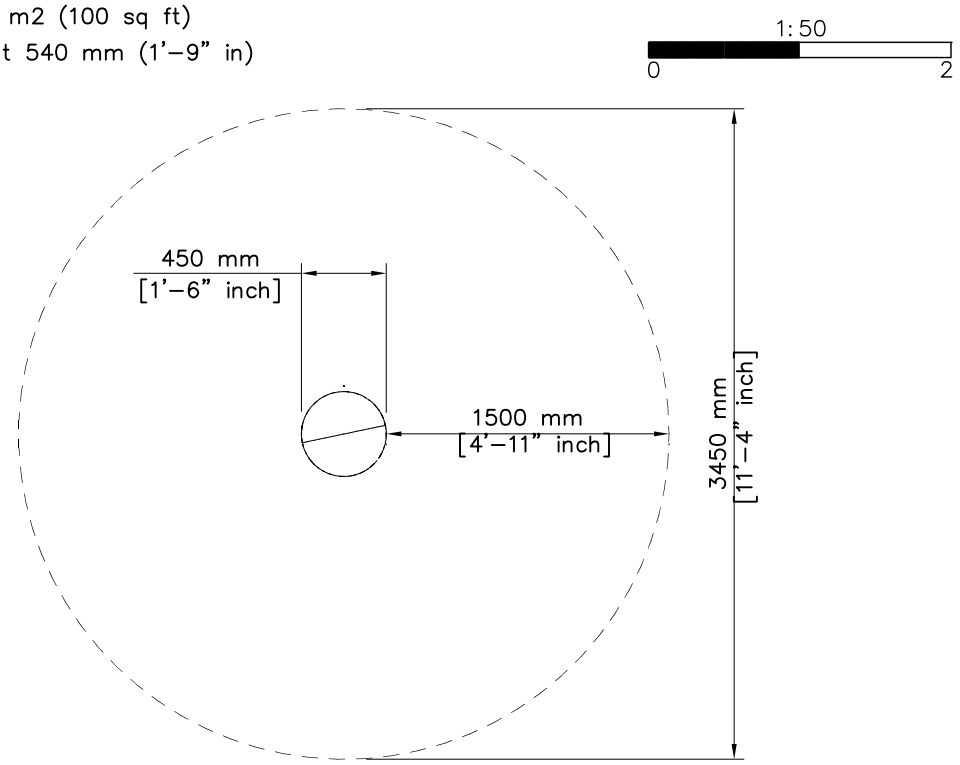

Copyright Lappset Group Ltd

LAPPSET®

220501

PARKOUR

DATE: 26.5.2014

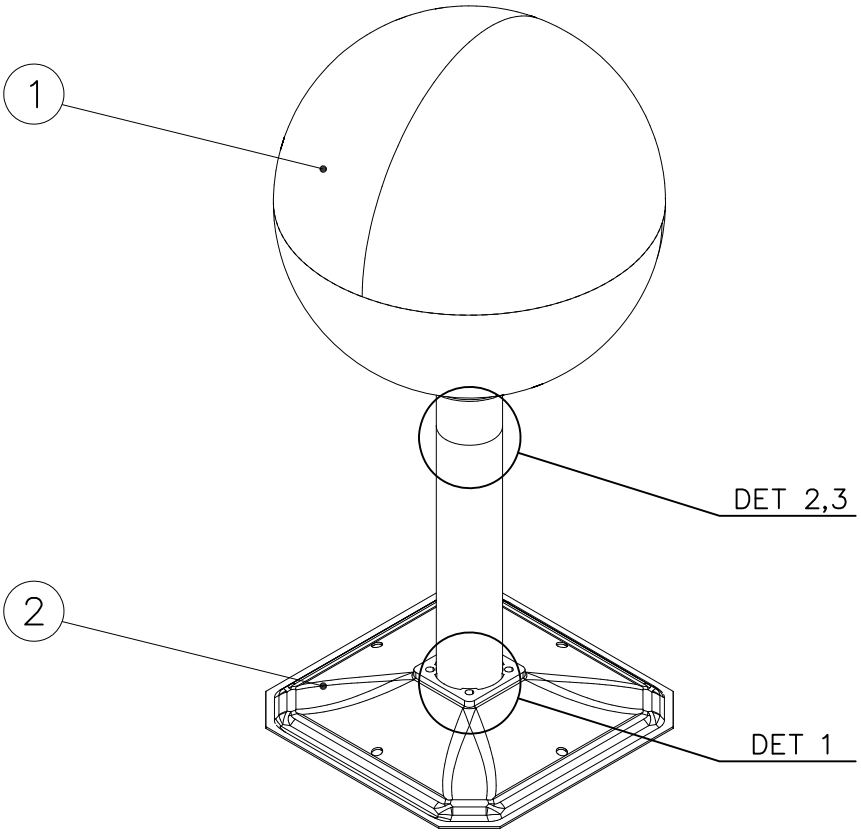

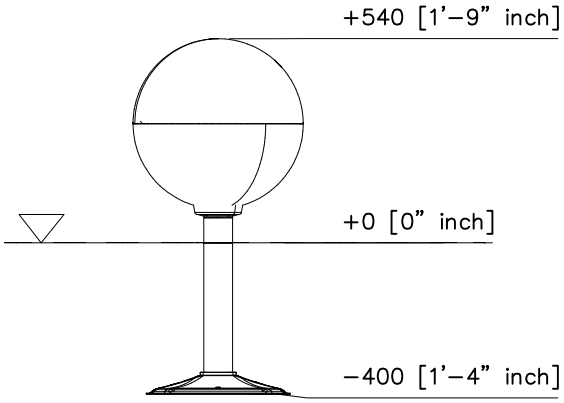

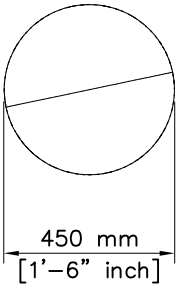

	PCS		PCS
1 703645 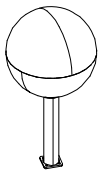	1	2 909519 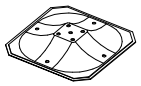 380x380	1
3 909638 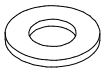 Ø20/10.5	4	4 909639 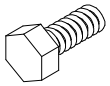 M10x25	4
5 702341	1	6 909637 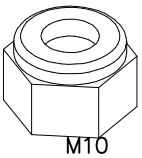 M10	4

DET 1

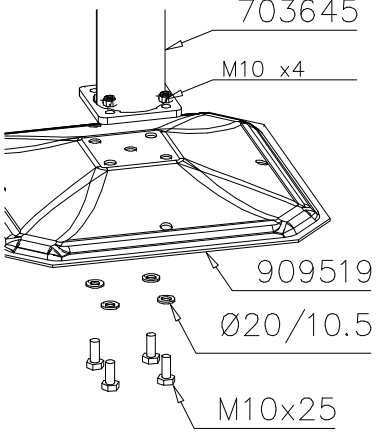

DET 2

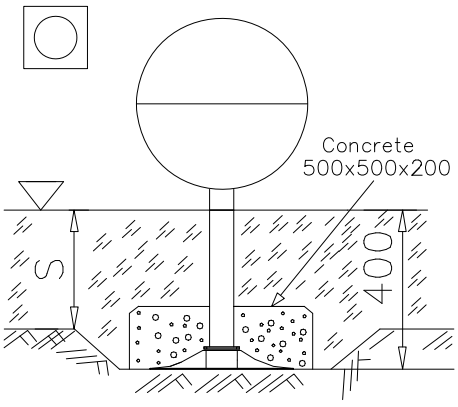

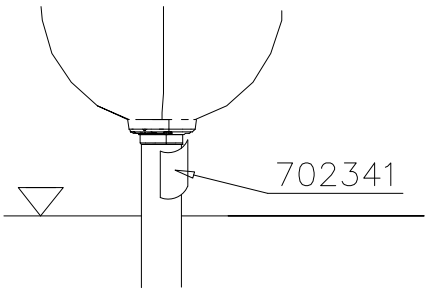

Copyright Lappset Group Ltd

LAPPSET®

PARKOUR

220501

DATE: 11.2.2013

---- Falling Space 9.3 m2 (100 sq ft)
Max Falling Height 540 mm (1'–9" in)

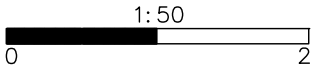

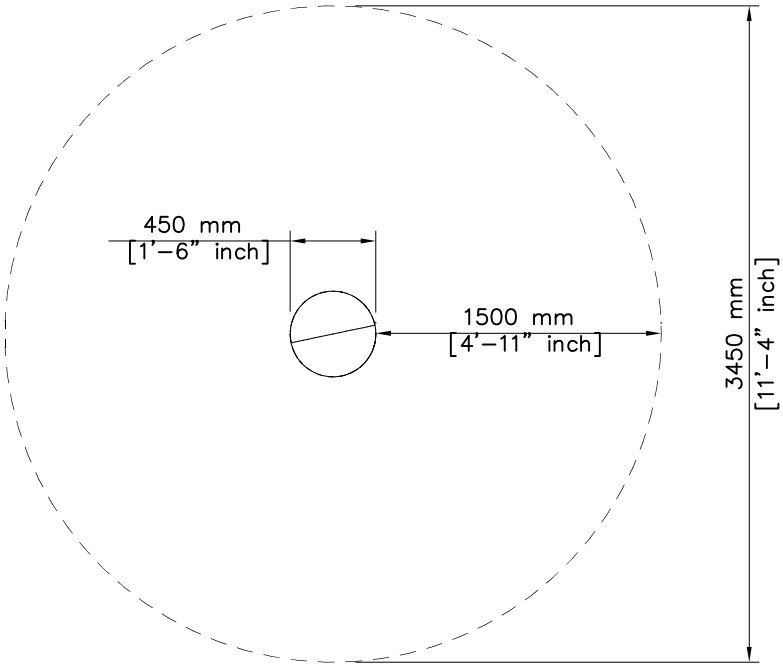

Copyright Lappset Group Ltd

LAPPSET®

PARKOUR

ASENNUSOHJE
MONTERINGSANSVISNING
INSTALLATION INSTRUCTION
AUFBAUANLEITUNG
NOTICE D'INSTALLATION

DATE: 20.2.2015

220513

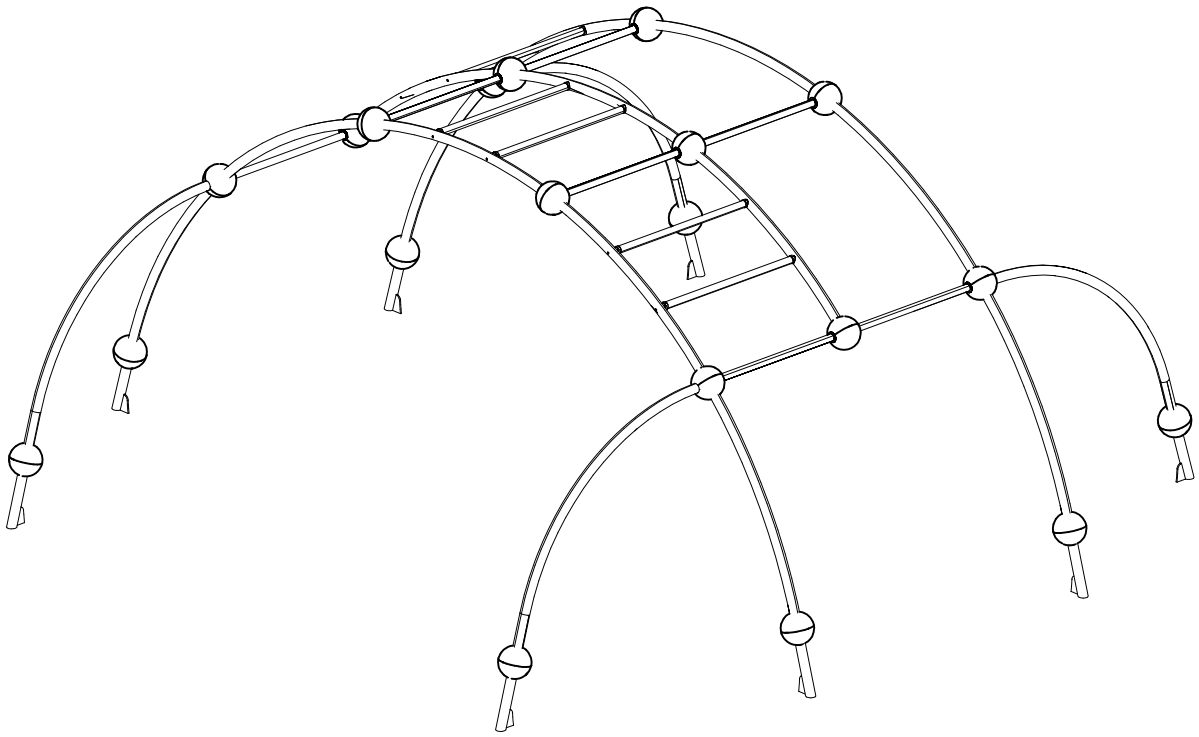

Copyright Lappset Group Ltd

LAPPSET®

PARKOUR

220513

3

DATE: 20.2.2015

702341	PCS	904161	PCS	902134	PCS	904747	PCS	904004	PCS	904005	PCS
	1	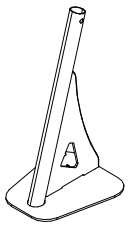	8	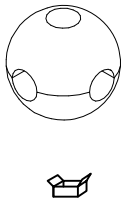	20	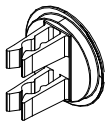	62		4		2
90x50						60x60x2		60.3x2.5		60.3x2.5	
904007	PCS	904100	PCS	904102	PCS	904103	PCS	904124	PCS	904125	PCS
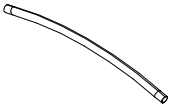	1	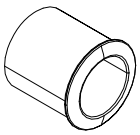	16	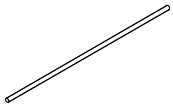	4	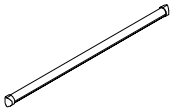	6	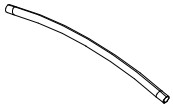	4		2
60.3x2.5		44.5–60.3		Ø44.5x2148		Ø44.5x1073		60.3x2.5		60.3x2.5	
904133	PCS	904158	PCS	999561	PCS		PCS		PCS		PCS
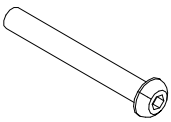	12	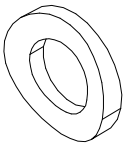	12	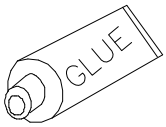	1						
M10x80		Ø18/10.5		10g							
	PCS		PCS		PCS		PCS		PCS		PCS
	PCS		PCS		PCS		PCS		PCS		PCS
	PCS		PCS		PCS		PCS		PCS		PCS
	PCS		PCS		PCS		PCS		PCS		PCS

Copyright Lappset Group Ltd

LAPPSET®
PARKOUR

220513

DATE: 20.2.2015

EN/AS Impact Area 44.4 m2 (478 sq ft)
Grid size = 1000 mm (40" in)

1:50
0 2

Note: page 4 (2/2)
Huom: sivu 4 (2/2)

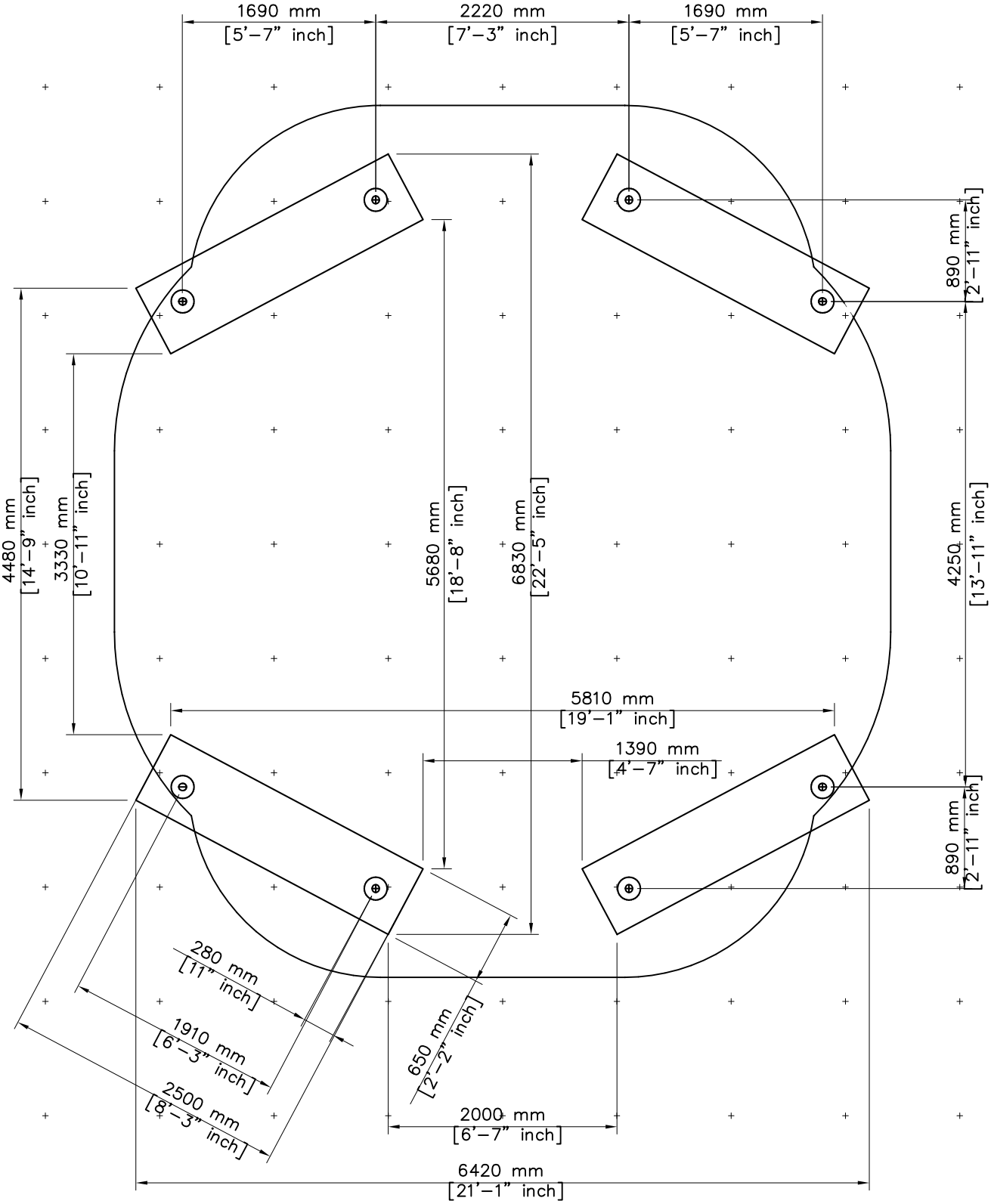

Copyright Lappset Group Ltd

Page 5A
Sivu 5A

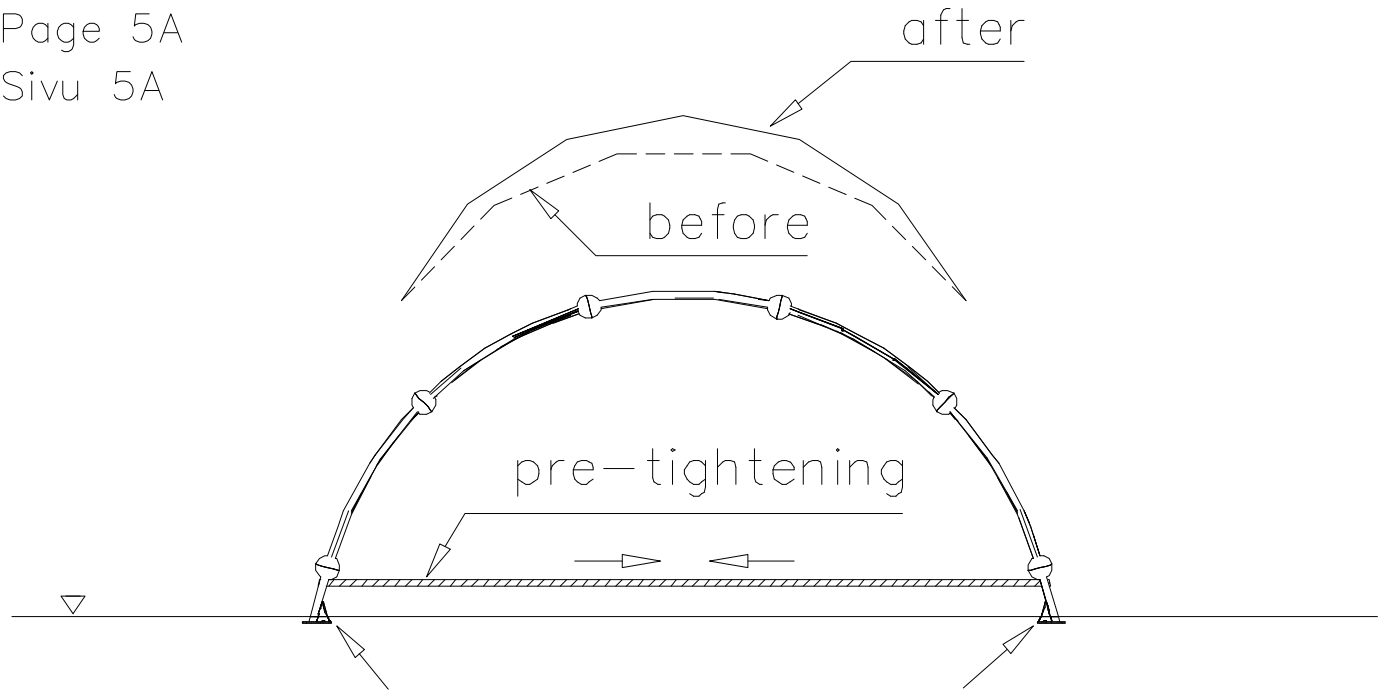

Before the concrete is poured, pre–tension the cage so that the shape of the product is round and even. The tensioning can be done using i.e. chain hoist or lashing straps. Remove the tensioners when concrete has dried enough to prevent the foot from moving.

Esijännitä tuote liinoilla tai taljoilla siten, että kaarevuus on tasainen ja symmetrinen. Kun haluttu muoto on saavutettu, valaa betoni. Poista kiristimet vasta kun betoni on kuivunut siten, että jalat eivät pääse liikkumaan.

Page 4, 5 Note: exact distances for the feet may vary depending on the pre–tensioning of the structure.

Sivu 4, 5 Huom: Jalkojen etäisyydet voivat erota jonkin verran kuvan mitoista. Tarkka mitoitus määräytyy rakenteen esijännityksen perusteella.

Copyright Lappset Group Ltd

LAPPSET®
PARKOUR

220513

DATE: 20.2.2015

——— EN/AS Impact Area 44.4 m2 (478 sq ft)

– – – – Falling Space 44,4 m2 (478 sq ft)
Max Falling Height 2650 mm (8' –9" in)

1:50
0 2

Note: page 4 (2/2)
Huom: sivu 4 (2/2)

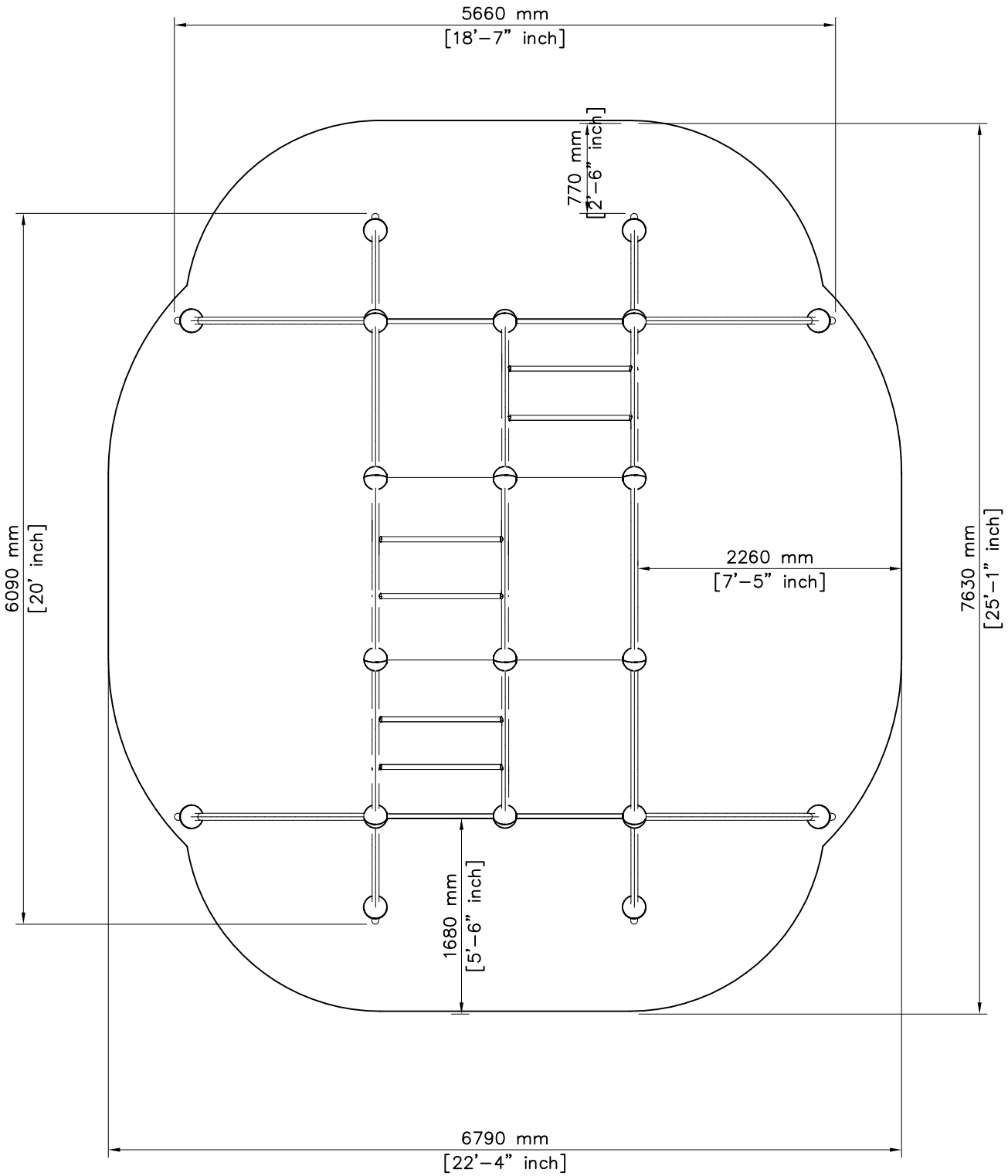

Copyright Lappset Group Ltd

LAPPSET®
PARKOUR

220513

DATE: 20.2.2015

5A

Note: page 4 (2/2) 5A.
Huom: sivu 4 (2/2) 5A.

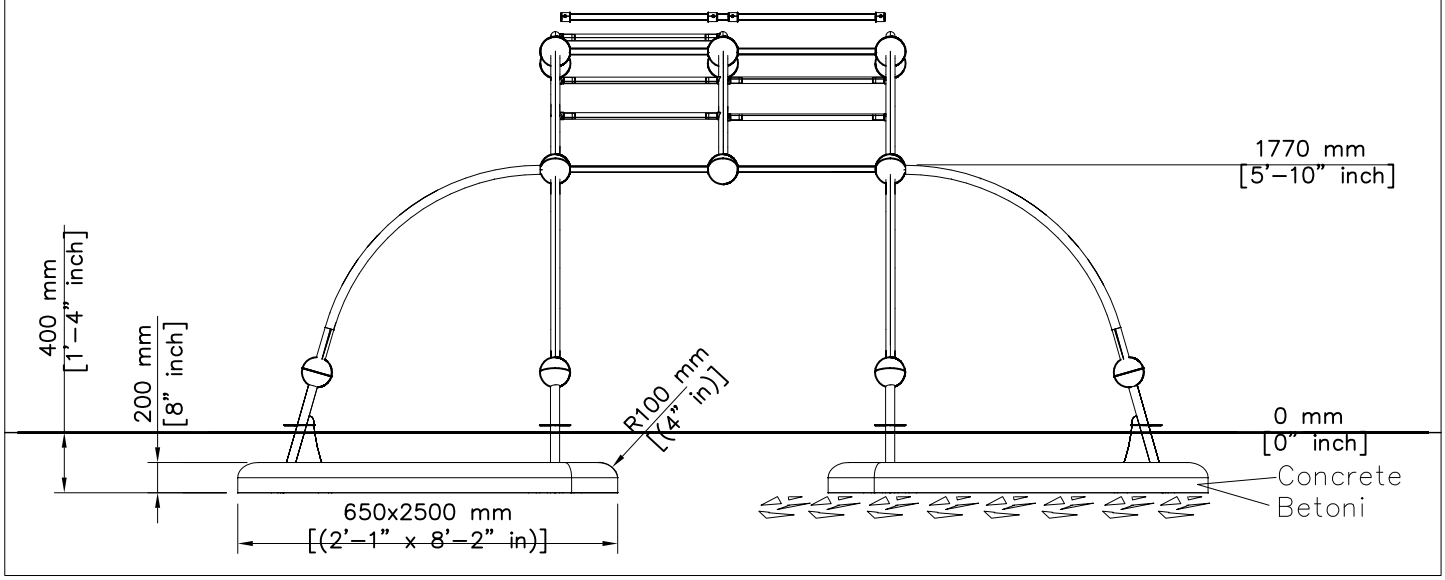

Note: page 4 (2/2) 5A.
Huom: sivu 4 (2/2) 5A.

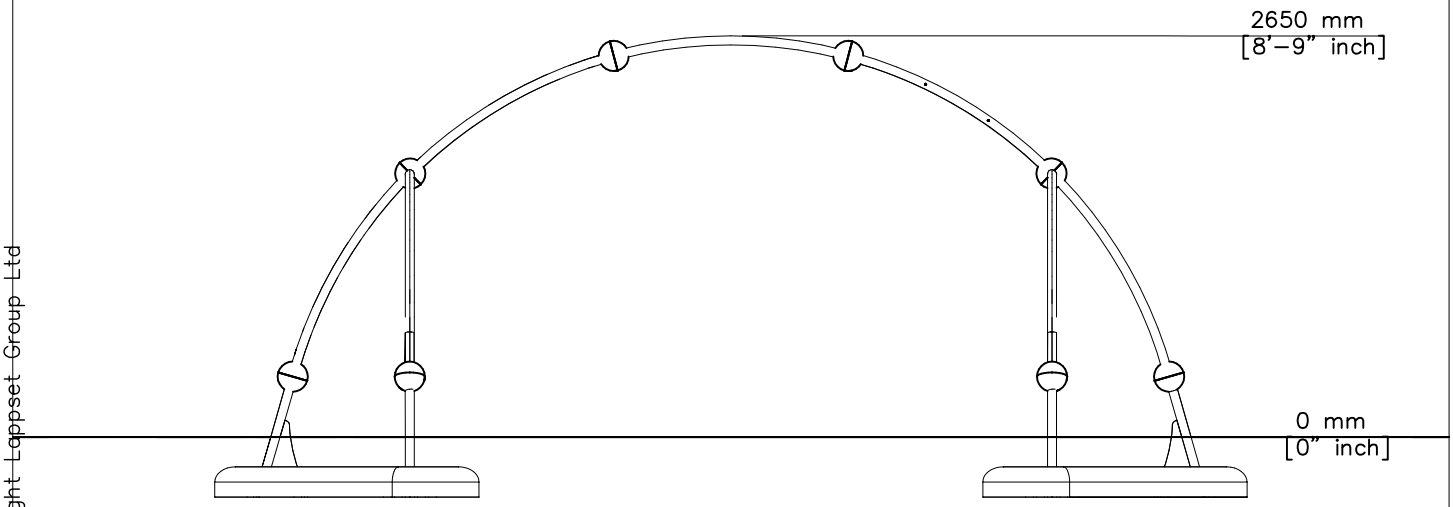

Copyright Lappset Group Ltd

LAPPSET®
PARKOUR

220513

(1/2)
6

DATE: 20.2.2015

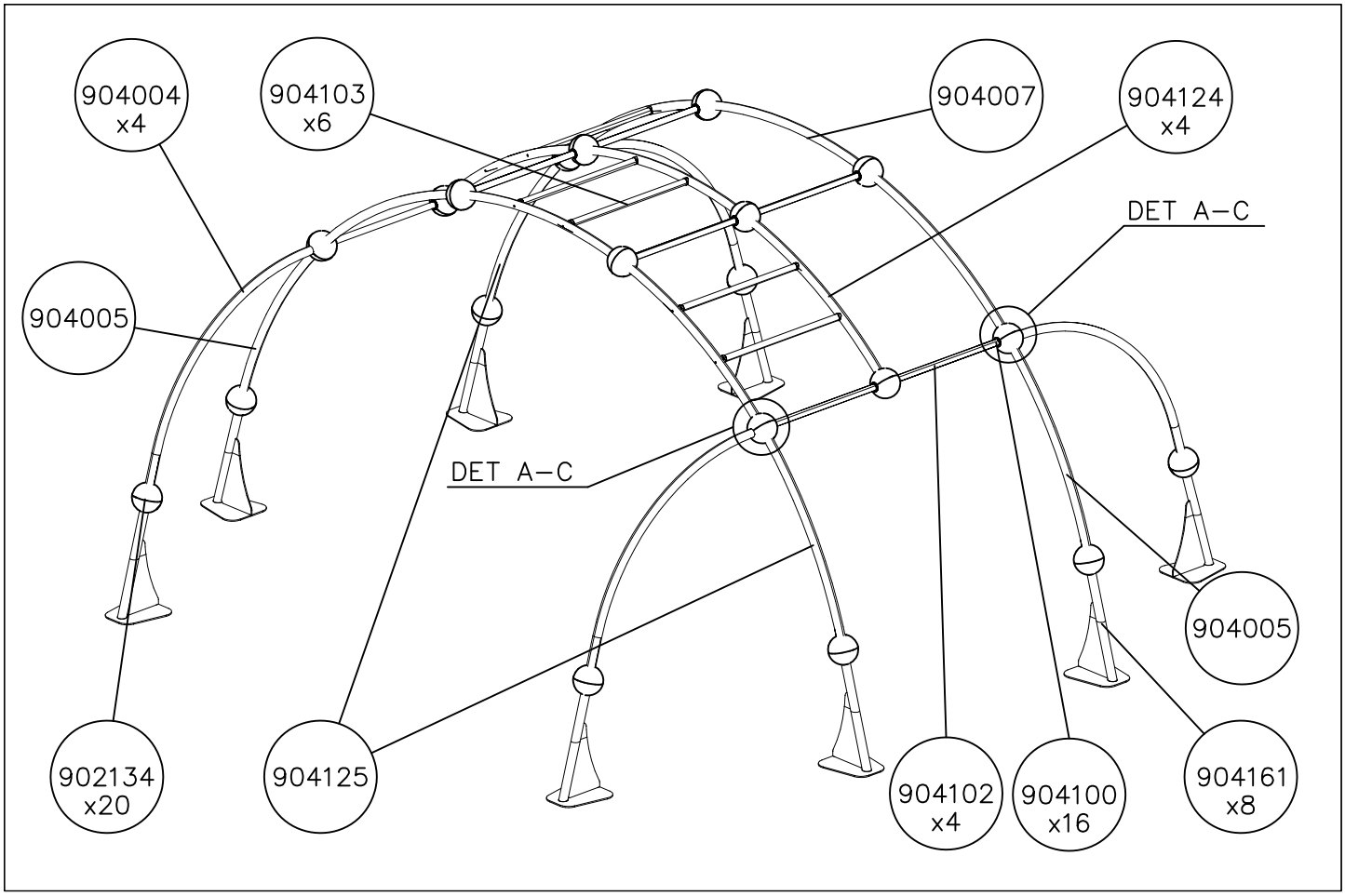

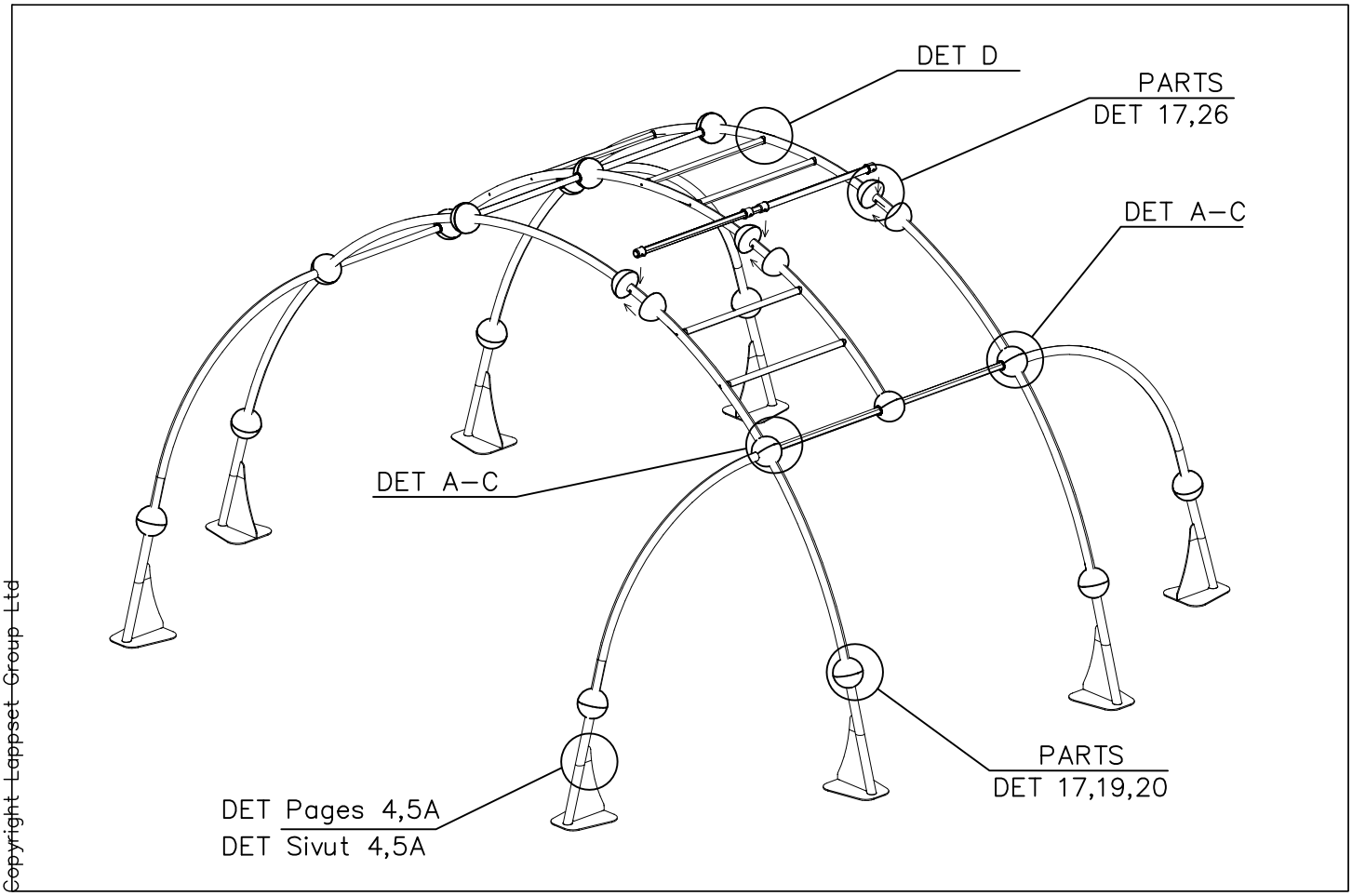

Copyright Lappset Group Ltd

LAPPSET®
PARKOUR

220513

(2/2)
6

DATE: 20.2.2015

DET A

Asennuksen helpottamiseksi voidaan poistaa kyntettä.

For ease of installation. the crests shown below can be cutted or grinded down.

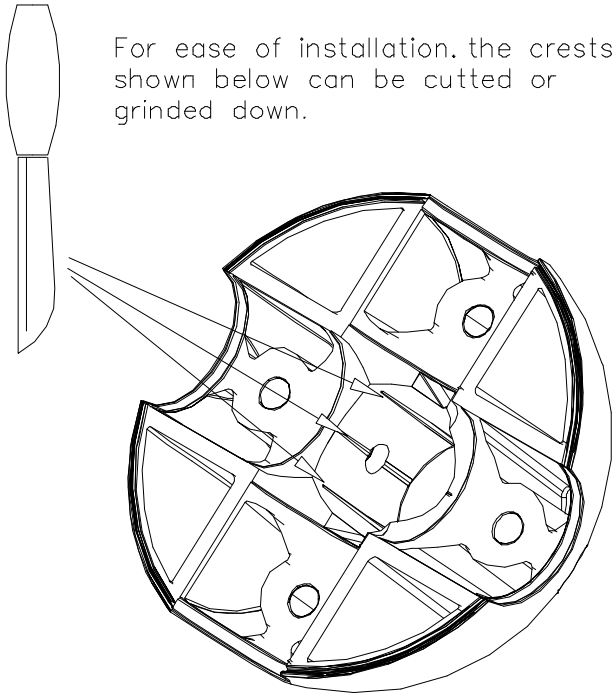

DET B

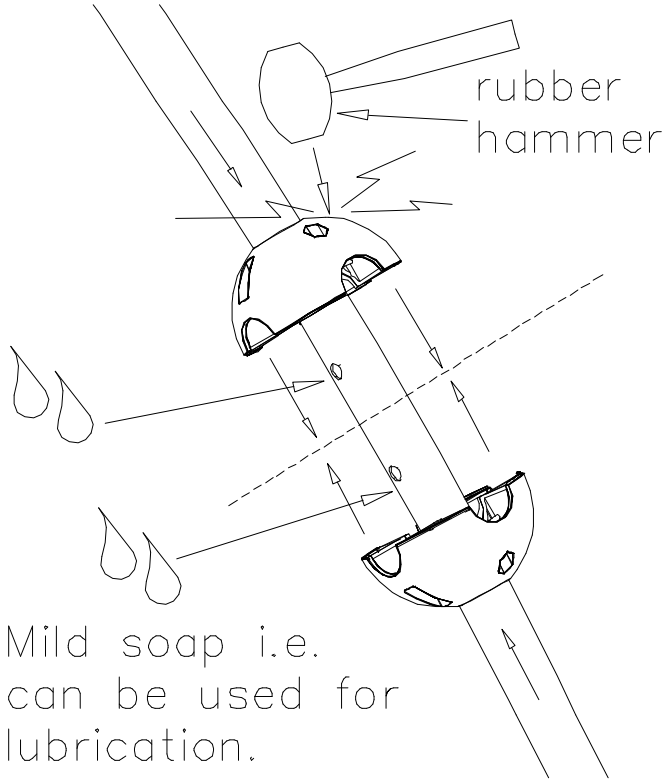

DET C

Asennuksen helpottamiseksi voidaan tuote esi-kasata syrjällään jo ennen pystytystä.

The product can be pre-assembled on it's side for easier assembly.

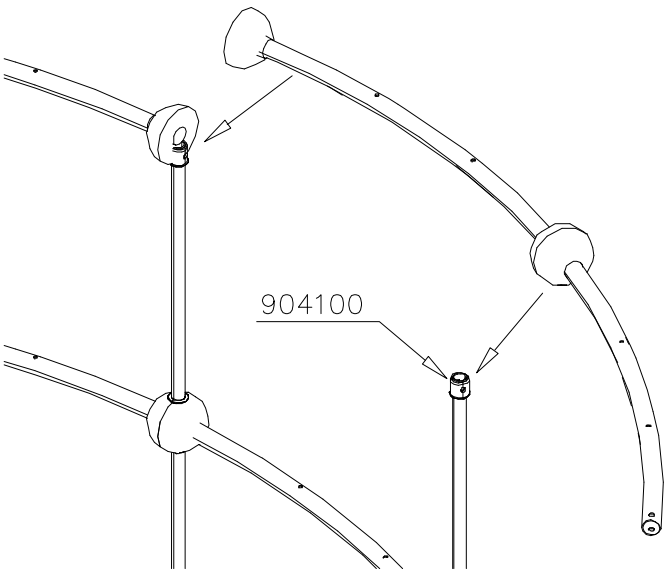

DET D

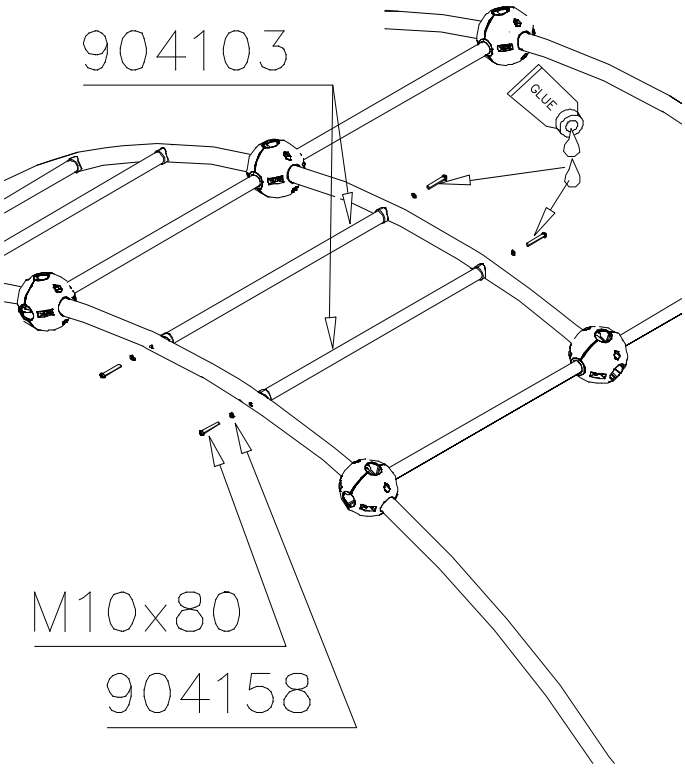

Copyright Lappset Group Ltd

LAPPSET®

PARKOUR

220513

DATE: 20.2.2015

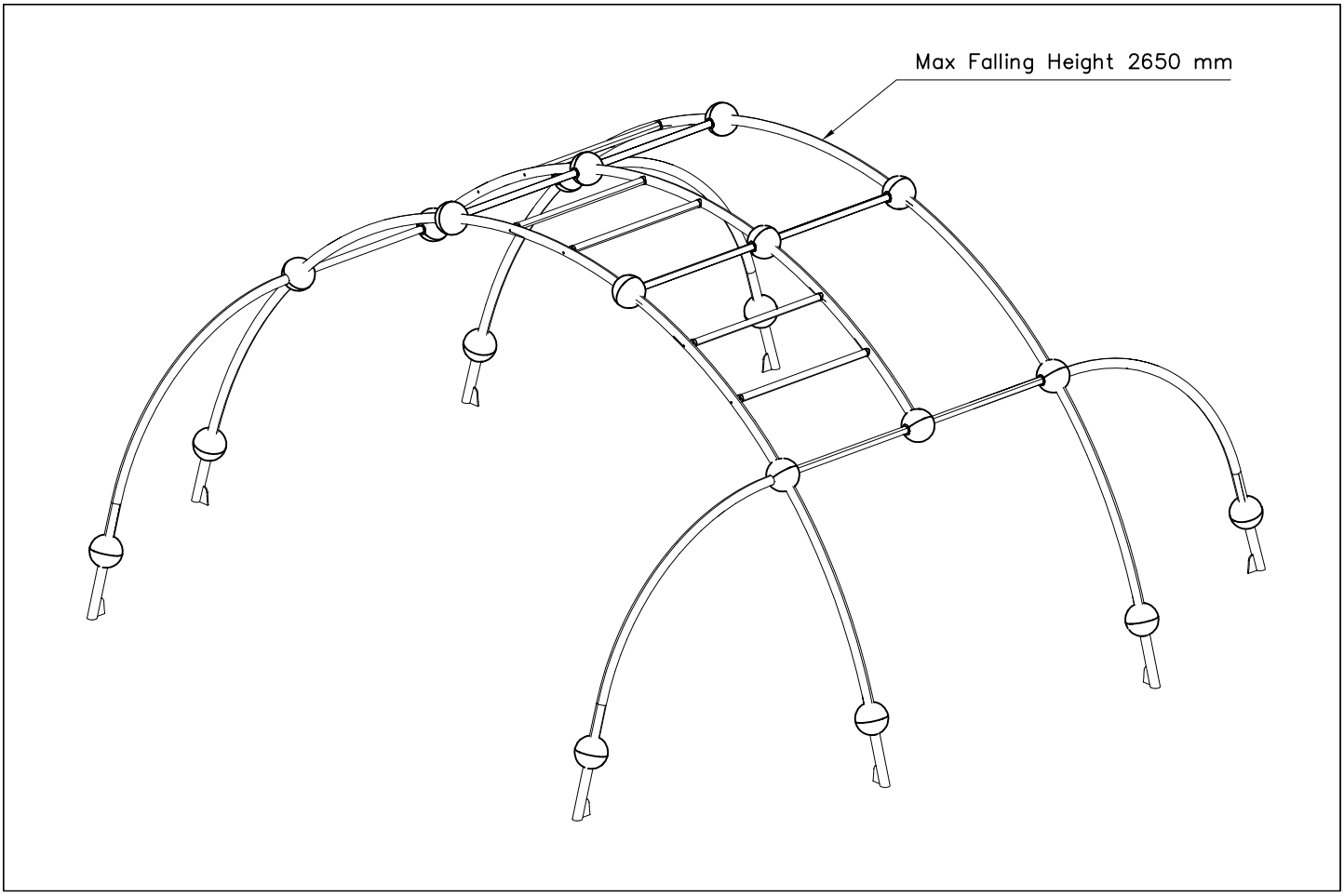

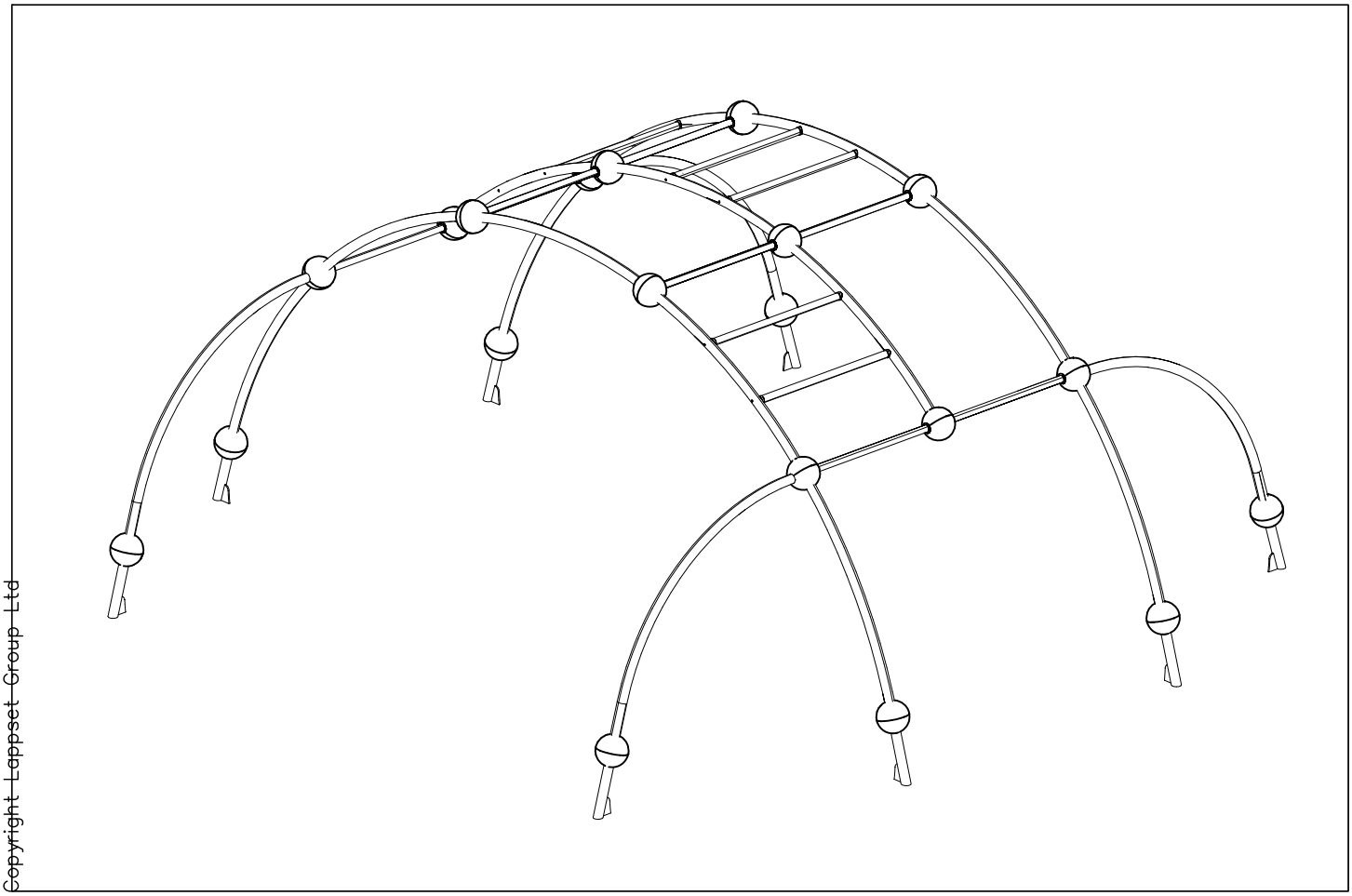

Copyright Lappset Group Ltd

LAPPSET®
PARKOUR

220513 ADAPTER UPGRADE

DATE: 17.7.2015

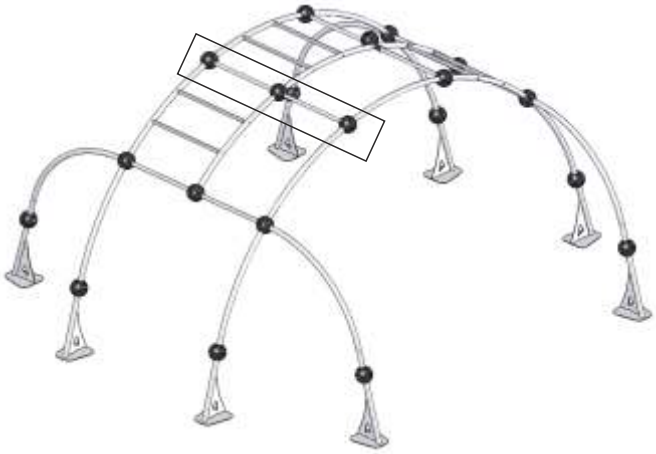

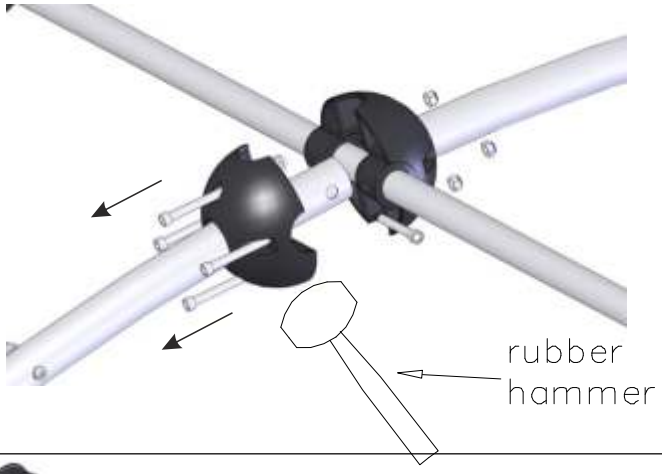

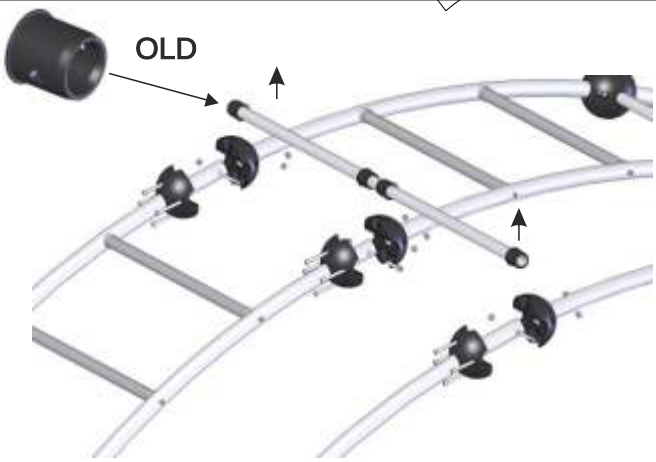

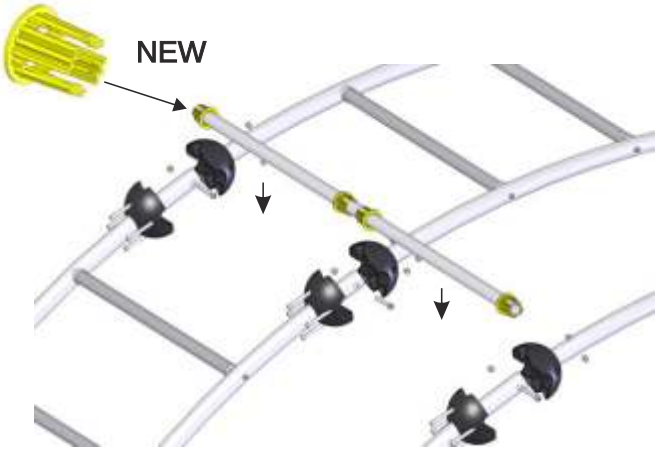

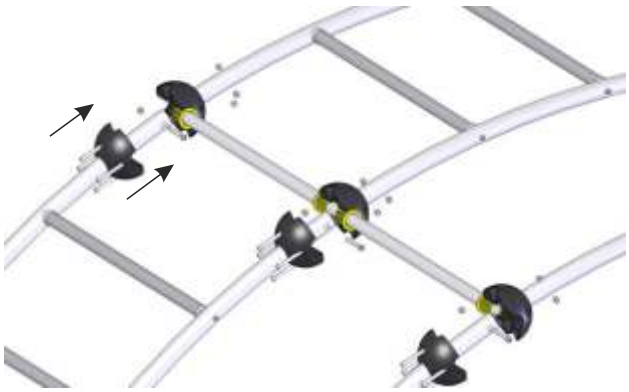

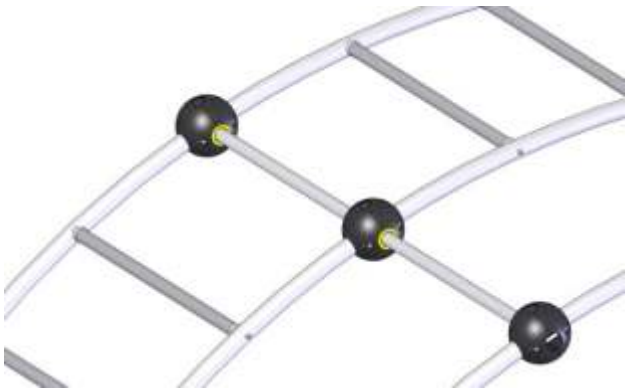

Copyright Lappset Group Ltd

LAPPSET®

220540

PARKOUR

DATE: 22.3.2013

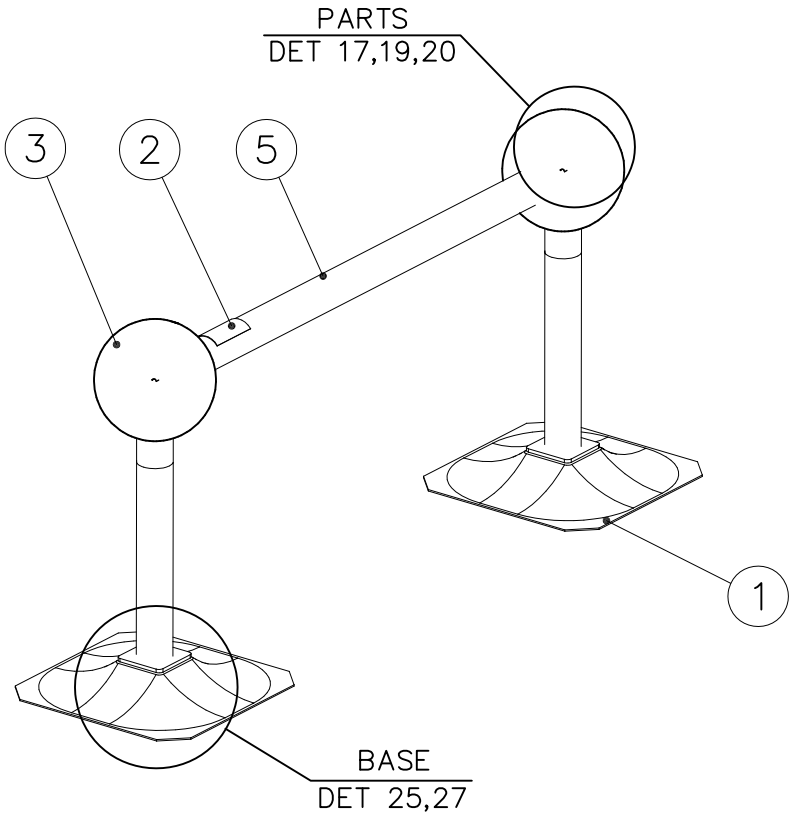

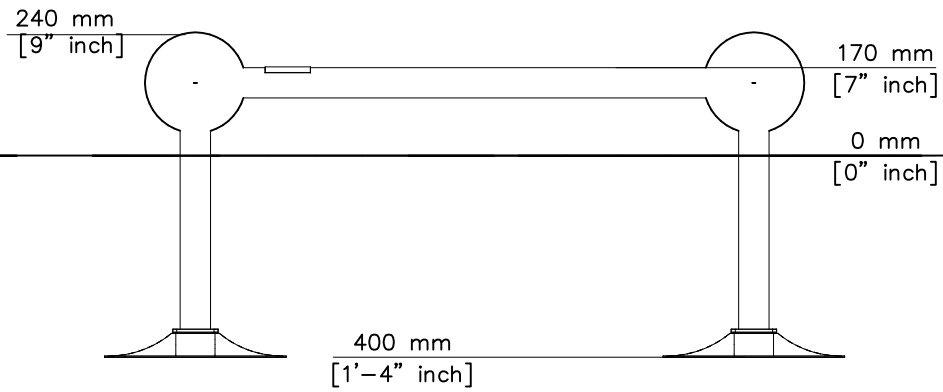

Falling Space 10.6 m2 (114.1 sq ft)

Max Falling Height 170mm (7" in)

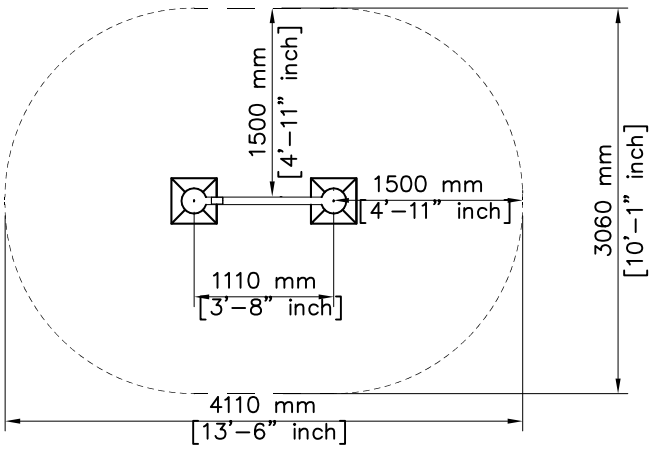

	PCS		PCS
1 701985 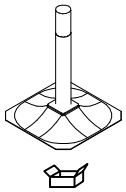	2	2 702341 90x50	1
3 902134 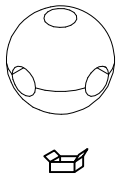	2	4 902157 60x60x2	8
5 902424 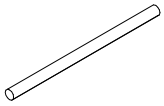 L 1034	1		

Copyright Lappset Group Ltd

Parkour, perustusohje

DATE: 18.8.2011

Syväperustus

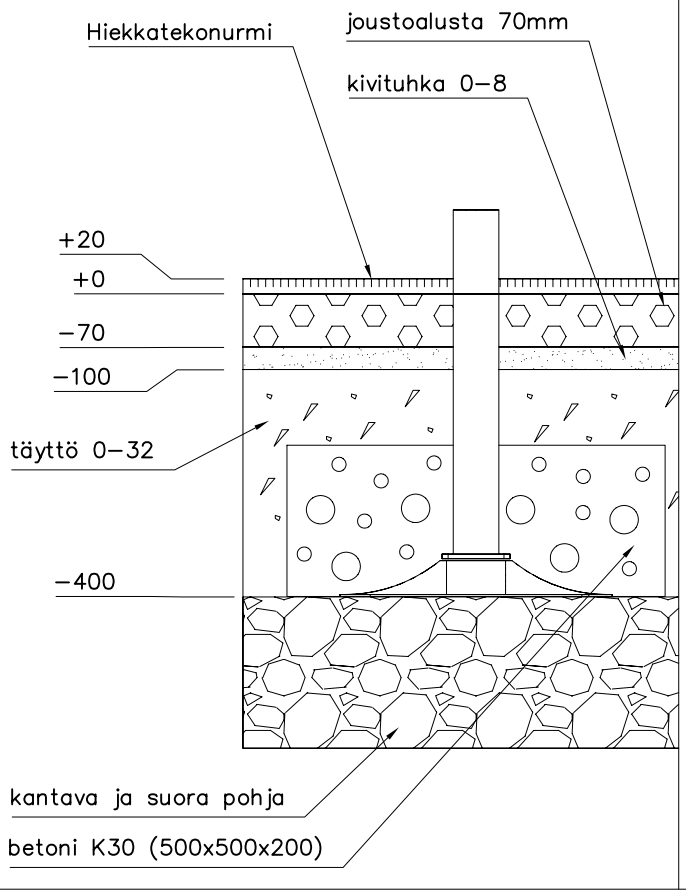

Pintaperustus

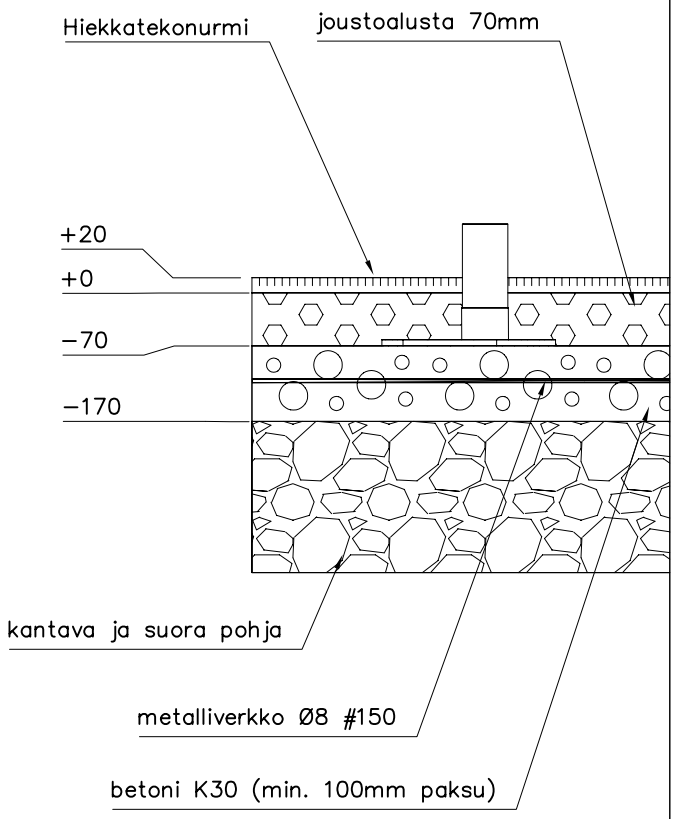

Syväperustus

1. Kaivetaan 400mm syvä kaivanto pinnan korosta. Jotkin välineet tarvitsevat syvemmän kaivannon (katso tuotteiden asennusohjeet).
   Huom! Kantava ja suora perustusten pohja.
2. Asennetaan välineet.
3. Valetaan betonit. Jotkin välineet voivat vaatia isomman valun, katso yksittäisten tuotteiden asennusohjeet.
4. Täytetään 0–32 oikeaan korkoon.
5. Tiivistetään täyttö.
6. Täytetään kivituhkalla (0–8) n.30mm kerros jonka jälkeen tasoitetaan ja tiivistetään hyvin.(+/–10mm/4m oikolauta)
7. Tämän jälkeen asennetaan nurmi (katso asennusohje).

Pintaperustus

1. Kaivetaan 170mm syvä kaivanto pinnan korosta.
   Huom! Kantava ja suora perustusten pohja.
2. Valetaan betonilaatta (min. 100mm paksu). Koko riippuu kentän koosta (S,M,L).
3. Asennetaan välineet.
4. Asennetaan joustopalat ohjeen mukaisesti (katso asennusohje).
5. Tämän jälkeen asennetaan nurmi (katso asennusohje).

Copyright Lappset Group Ltd

LAPPSET ®

Parkour, foundation

DATE: 18.8.2011

Deep mounting

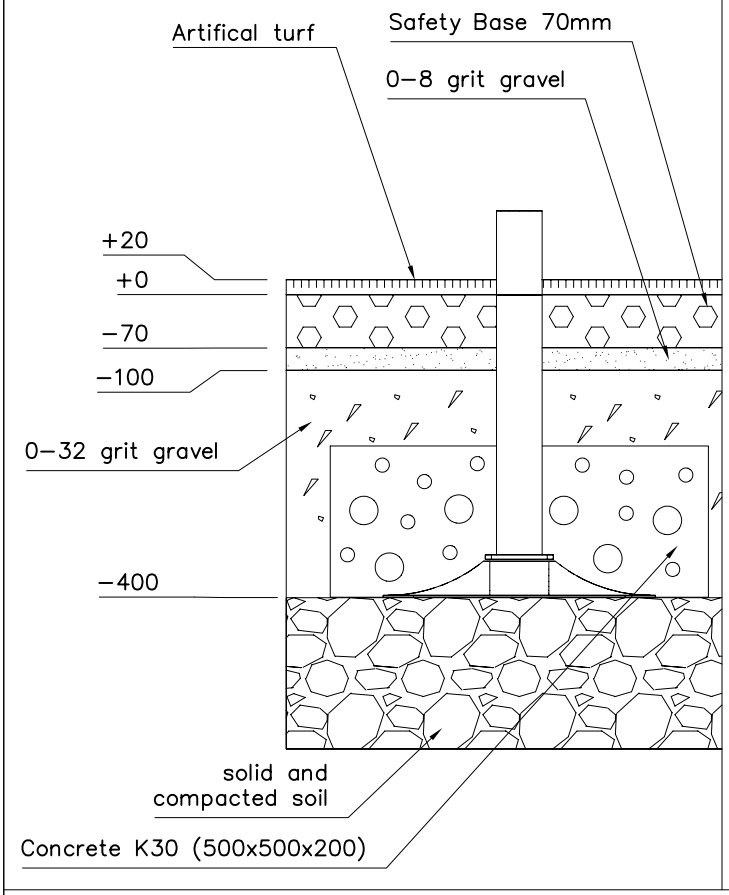

Surface mounting

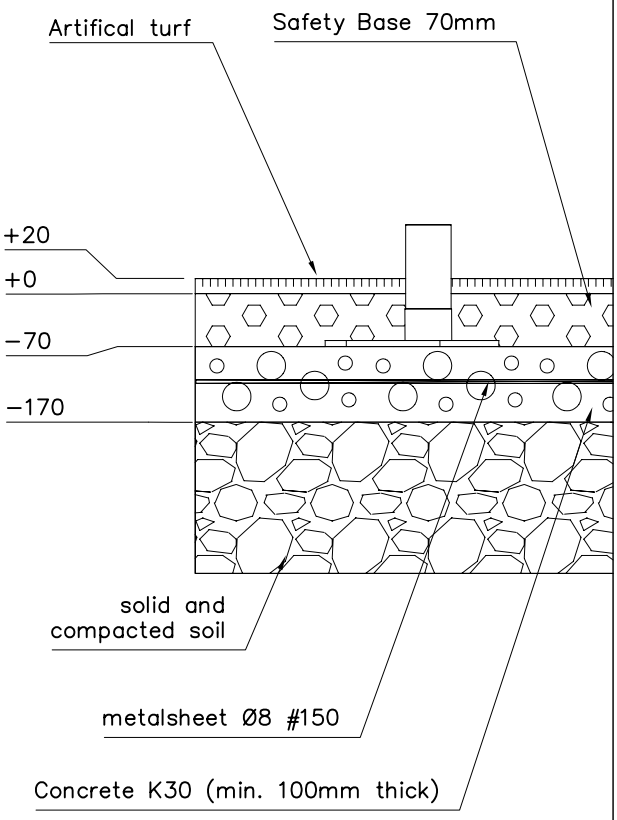

Deep mounting

1. Start by digging 400 mm deep excavation. Some equipment may need more depth, see assembly instructions for individual equipment.
2. Assemble the equipment according to assembly instructions.
3. Make concrete blocks. Some equipment may need bigger block, see assembly instructions.
4. Fill with 0–32 grit to correct level.
5. Compact the layer.
6. Spread 30 mm thick layer using grit 0–8 gravel. Compact and level it thoroughly. (+/–10mm/4m)
7. Assemble the safety base according to assembly instructions.
8. Assemble the turf according to assembly instructions.

NOTE: Also the soil below the starting level (–400) needs to be solid and compact.

Surface mounting

1. Start by digging 170 mm deep excavation.
2. Make concrete plate, see illustration (min. 100mm thick). Size depends on the size of the Parkour field (S,M,L).
3. Assemble the equipment according to assembly instructions.
4. Assemble the safety base according to assembly instructions.
5. Assemble the turf according to assembly instructions.

Copyright Lappset Group Ltd

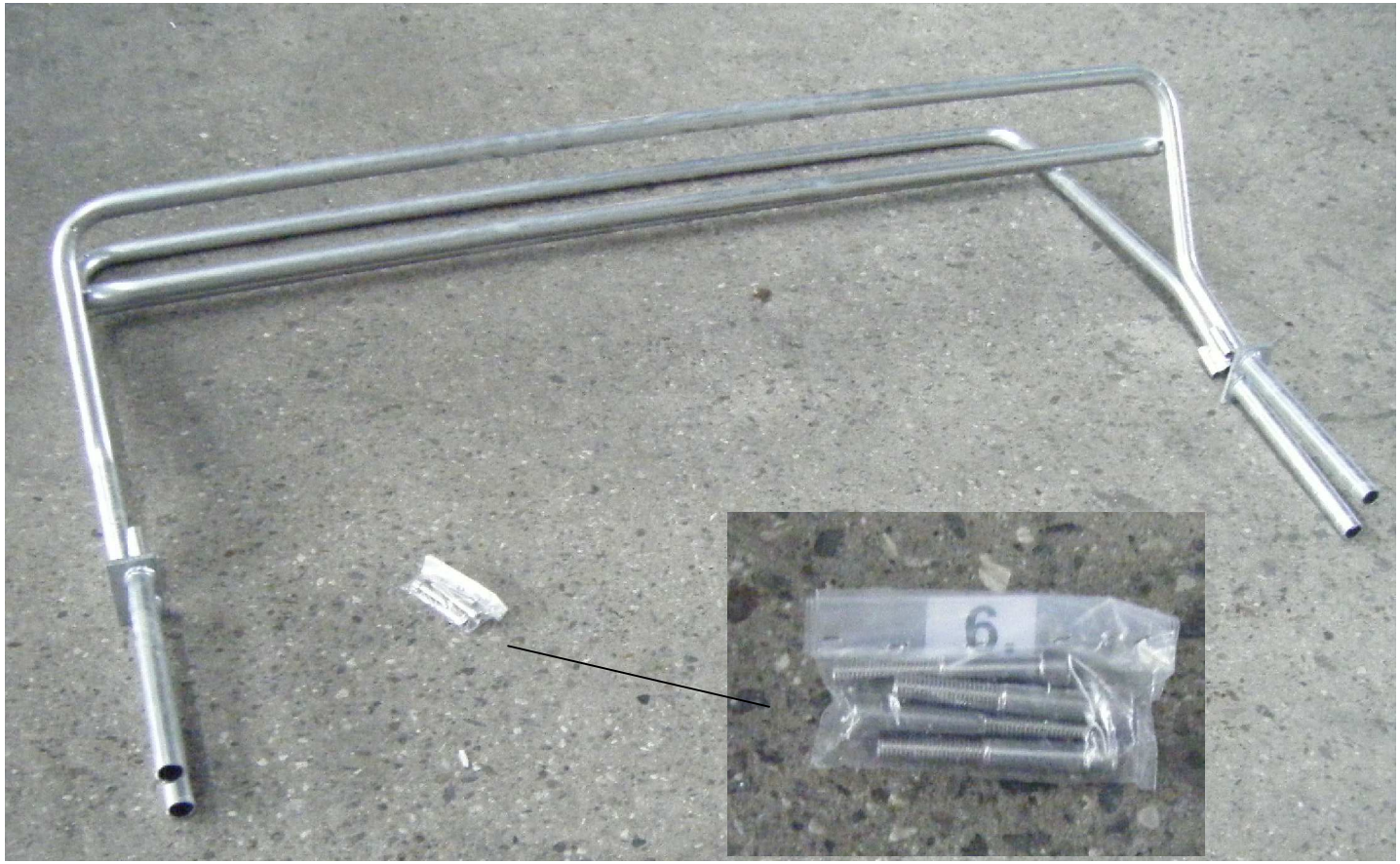

1x frame mod. 600
2x anchors
1x screw sachet no. 6

CUSTOMER	DRAWING N° Parts list - bench 600	© copyright by euroform ORIGINAL W®
PROJECT	SCALE / DATE 02.02.2012	euroform K. Winkler s.r.l. I-39032 Campo Tures (BZ) T +39 0474 061120 F +39 0474 061121 mail: info@euroform-w.it web: www.euroform-w.com
	NAME Untergasser S.	

LAPPSET®
PARKOUR

220505

REF: 220505
DATE: 5.12.2012

AS Impact Area 21.3 m2 (229 sq ft)
Max falling height 2005 mm. (6'–7 1/4" in)

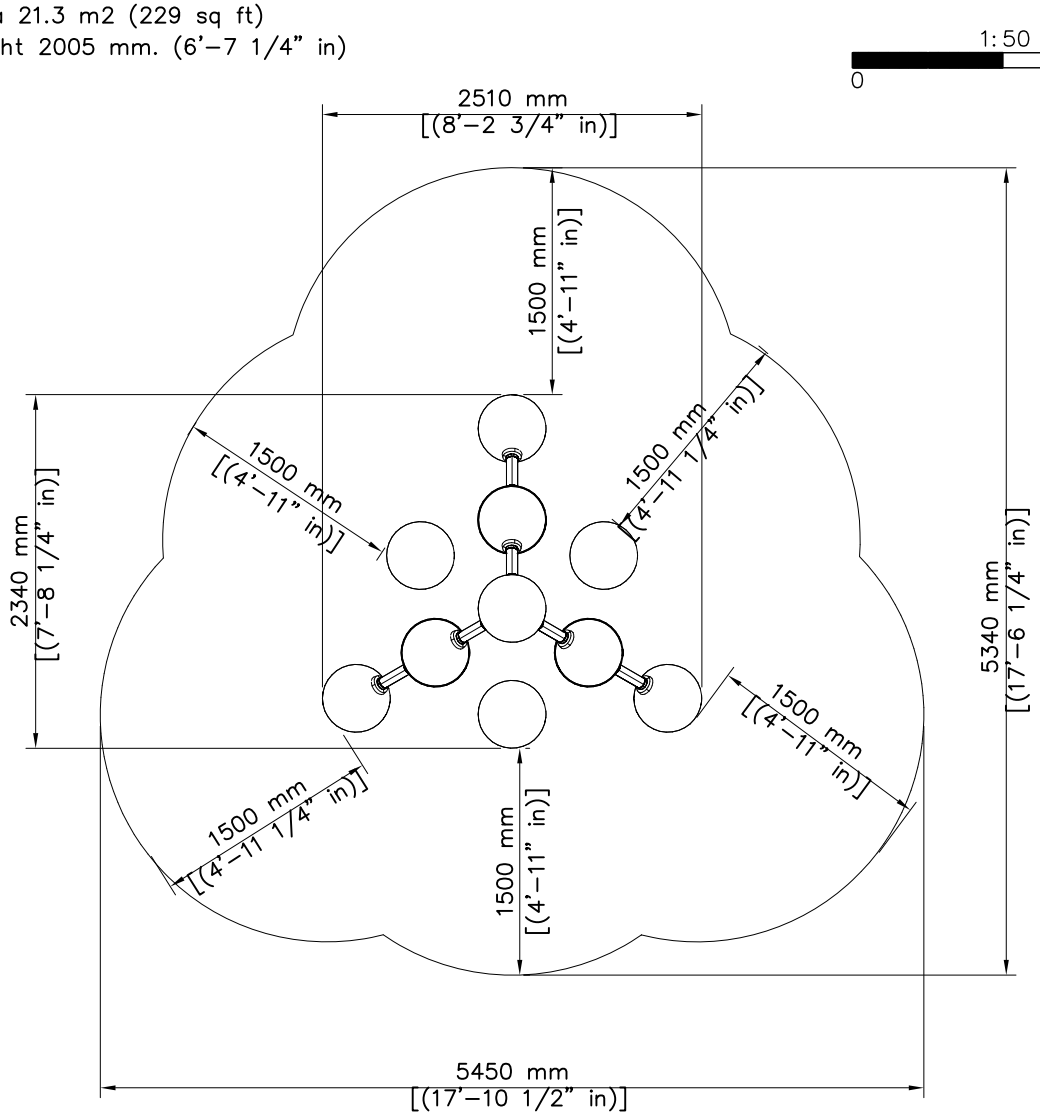

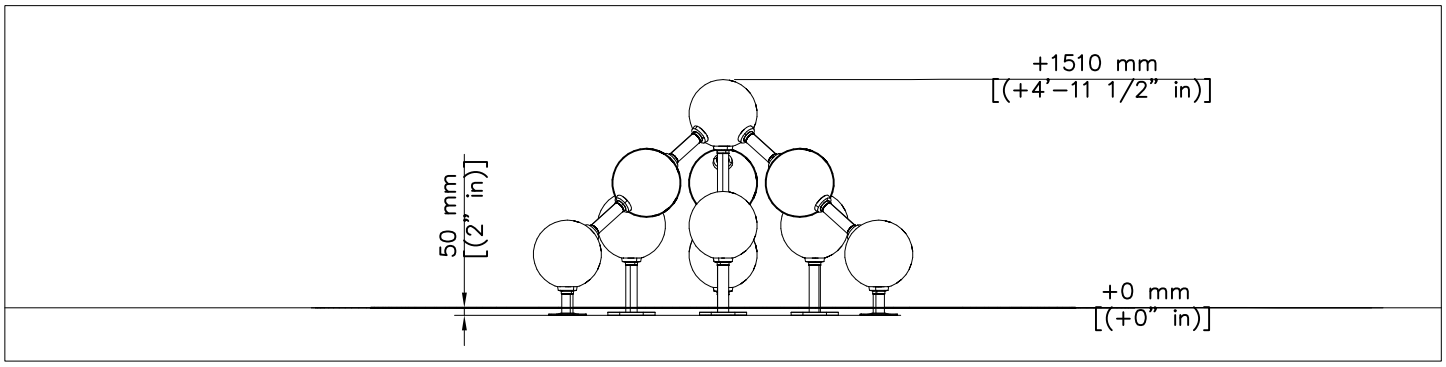

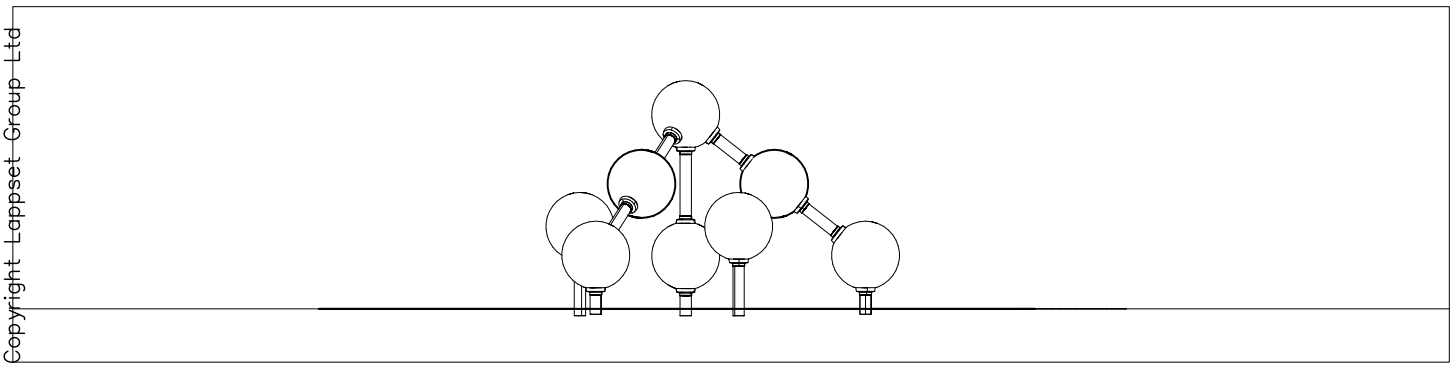

Copyright Lappset Group Ltd

LAPPSET®

Impact Area EN 1176

REF:
DATE: 20.2.2018

4x

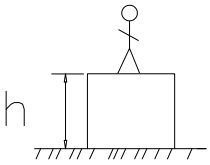

h < 600

Without movement and therefore without Impact Area

Totally hard surfaces.

Note. Lappset does <u>not</u> <u>recommend</u> totally hard surfaces at all.

E.g. concrete or asphalt

h < 600

With movement e.g. rocking

Materials with very limited impact attenuating properties.

E.g. wood

h < 1000

Materials with significant impact attenuating properties.

fine gravel 0–8 mm

grass

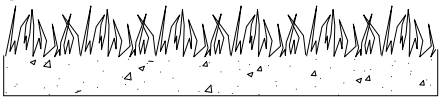

unsorted sand

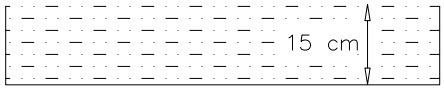

h < 3000

Loose fill material

E.g.
sand/gravel 0,25...8 mm D60/D10<3,0
Woodchips 5...30 mm
bark 20...80 mm

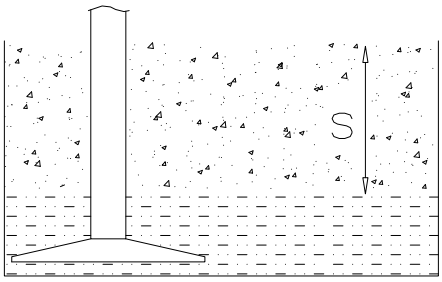

S	h
30 cm	< 2,0 m
40 cm	< 3,0 m

Syntethic granulates

S	h
40 mm	~> 1,2...1,3 m
50 mm	~> 1,5...1,7 m
60 mm	~> 1,8...2,0 m
70 mm	~> 2,1...2,5 m

Note. For accurate values, see manufacturer's instructions.

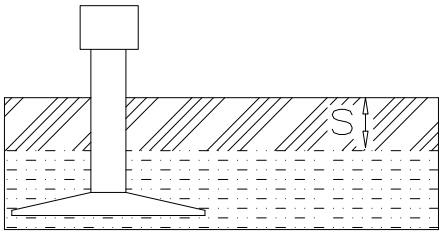

Copyright Lappset Group Ltd

LAPPSET®

EN 1176 FOUNDATION

REF:
DATE: 20.2.2018

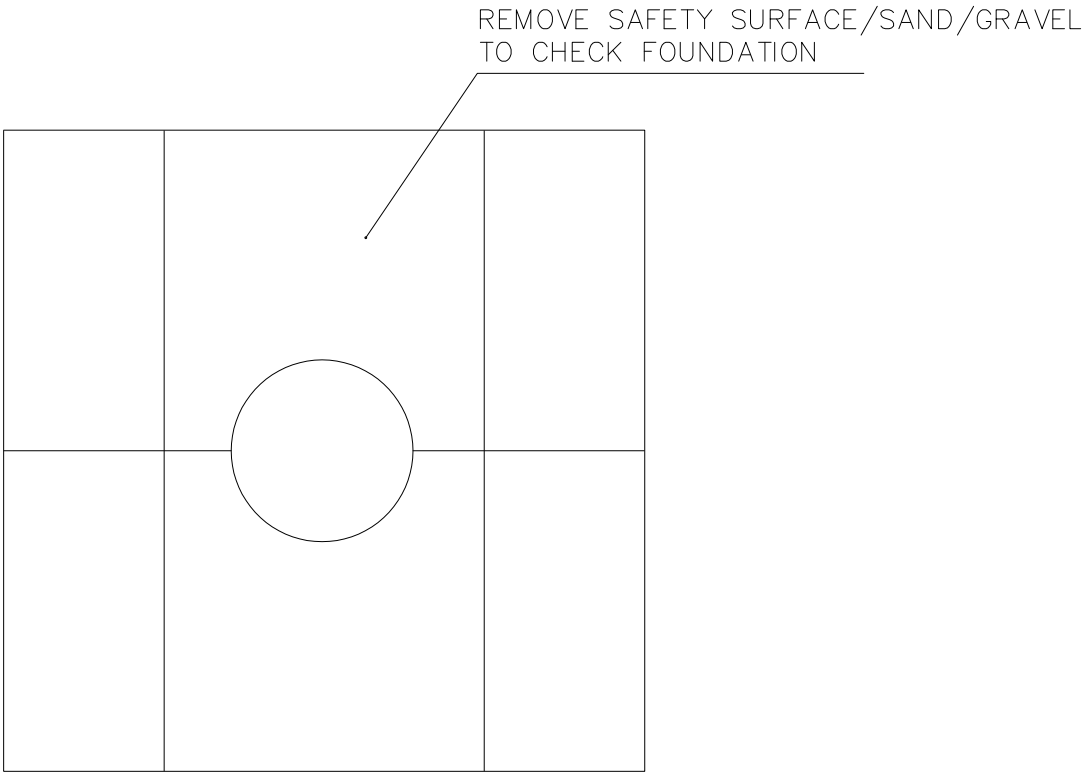

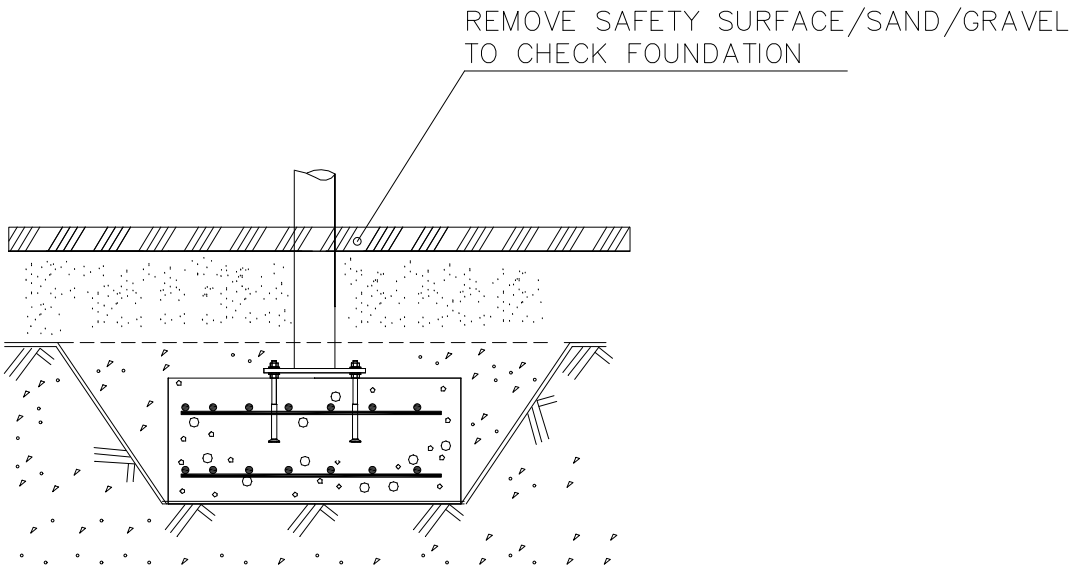

Copyright Lappset Group Ltd

PRODUCT SPECIFIC INSTALLATION FOR GIBBONSWING (220513 AND 220513) MID-CONNECTORS

1. Slide the bushings to tube as shown in picture below

2. Lay the tube with bushings on bottom half of spherical connector. Minimize the gap between bushing sleeve and spherical connector.

3. Lay the top half on the bottom half and tighten both M10 bolts in turns. The bushings may slide out 1…2mm but not more.

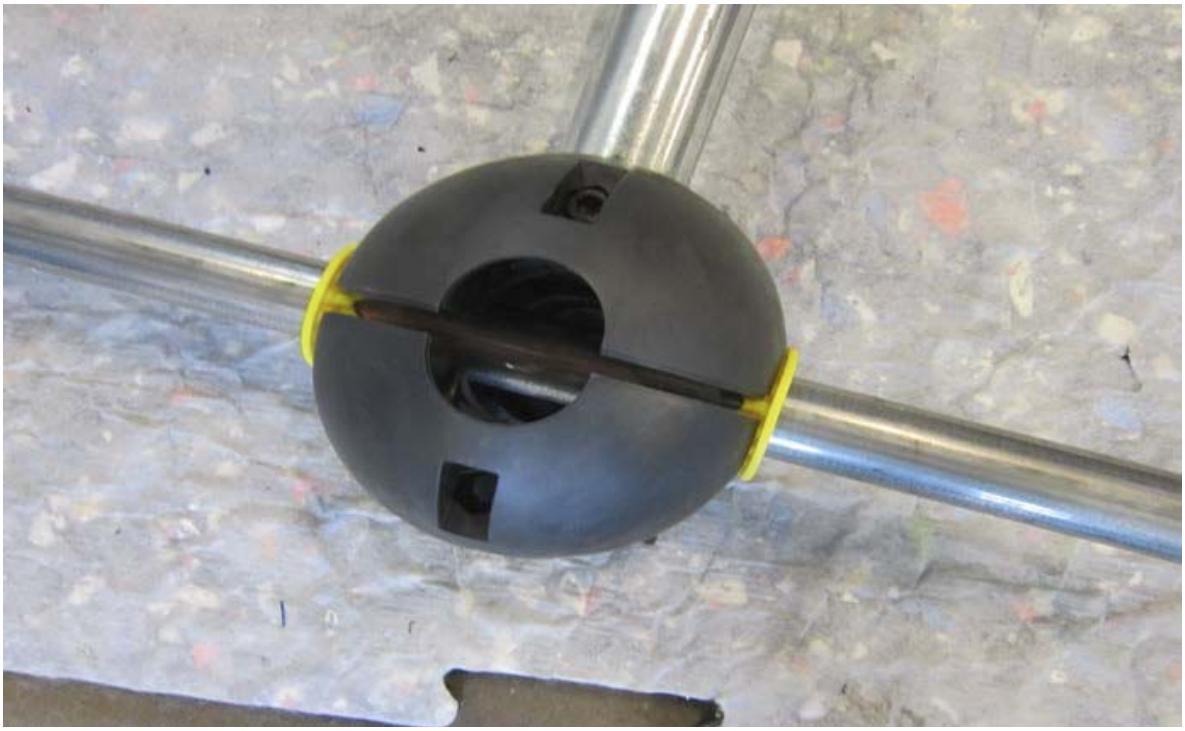

4. The third tube (middle arch) will be installed on another of the “closed holes” i.e. the holes which cannot be splitted. This installation can take place even after the halves are fully tightened.

LAPPSET®
FINNO

SWING PARTS

(1/4)

REF: SWING
DATE: 24.9.2024

DET A

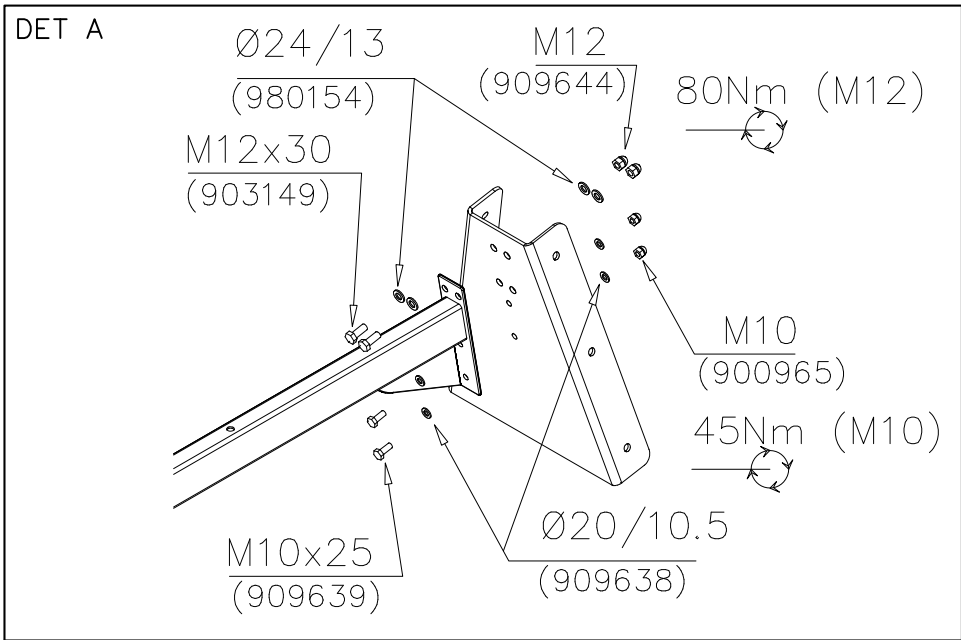

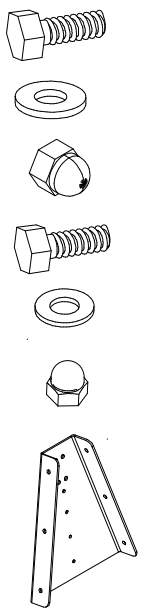

- M12x30 2 pcs
- Ø24/13 4 pcs
- M12 2 pcs
- M10x25 2 pcs
- Ø20/10.5 4 pcs
- M10 2 pcs
- 905991 1 pcs

DET A1

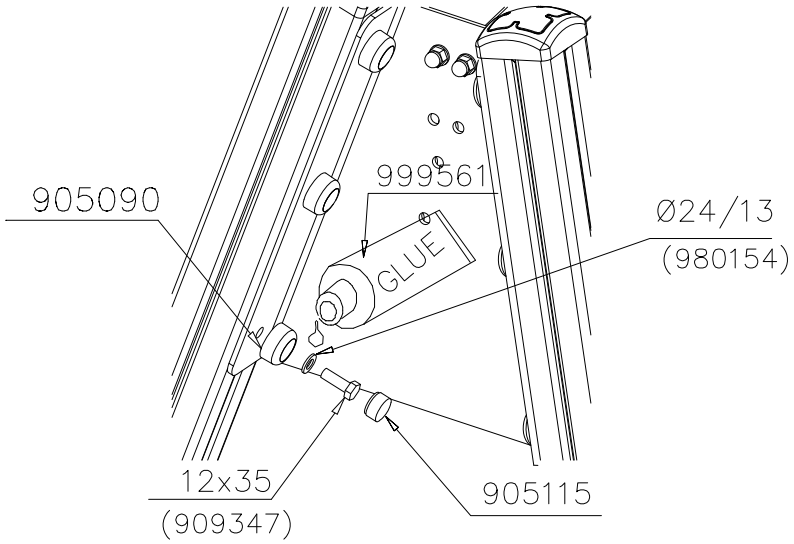

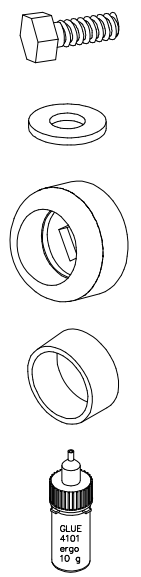

- M12x35 6 pcs
- Ø24/13 6 pcs
- Ø45 6 pcs
- Ø30 6 pcs
- GLUE

DET B

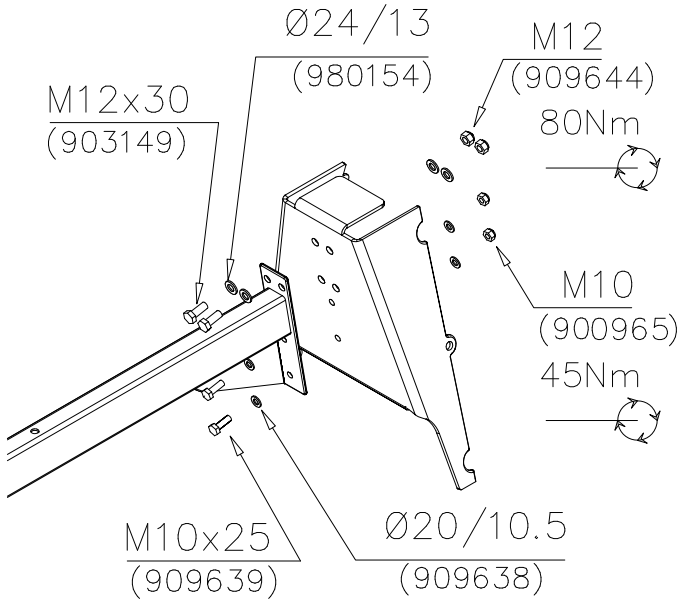

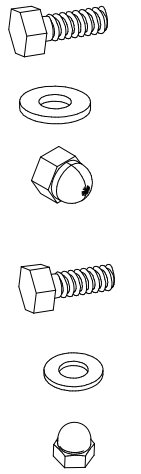

- M12x30 2 pcs
- Ø24/13 4 pcs
- M12 2 pcs
- M10x25 2 pcs
- Ø20/10.5 4 pcs
- M10 2 pcs

Copyright Lappset Group Ltd

LAPPSET®
FINNO

SWING PARTS

(2/4)

REF: SWING
DATE: 29.6.2022

DET B

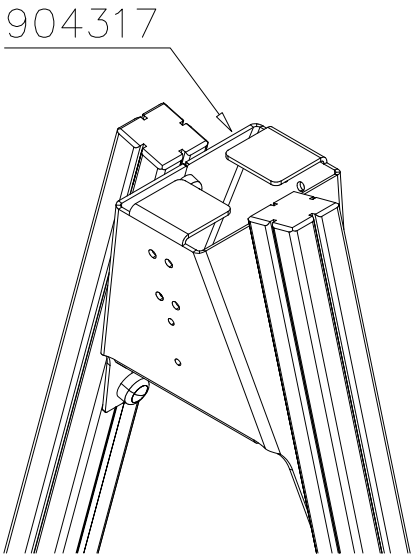

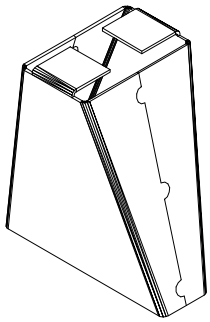

DET B1

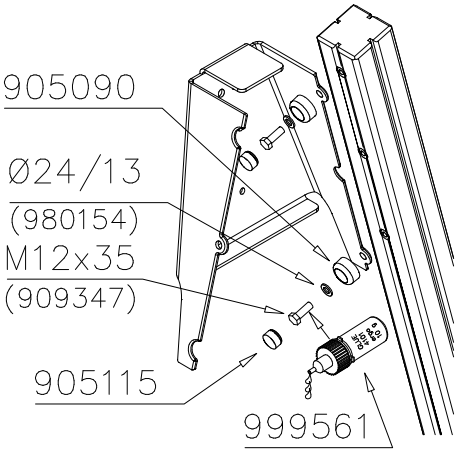

M12x35 6 pcs

Ø24/13 6 pcs

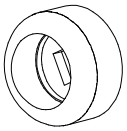
Ø45 6 pcs

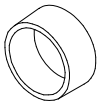
Ø30 6 pcs

GLUE

DET C

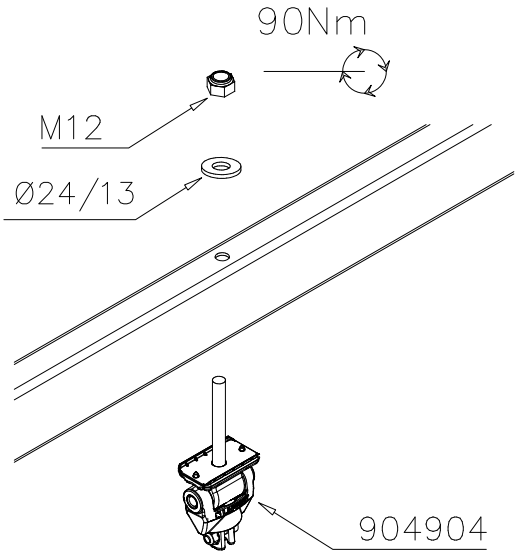

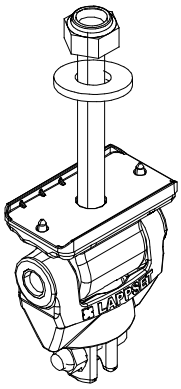
904904

Copyright Lappset Group Ltd

LAPPSET®
FINNO

PARTS

REF: SWING
DATE: 29.6.2022

DET D

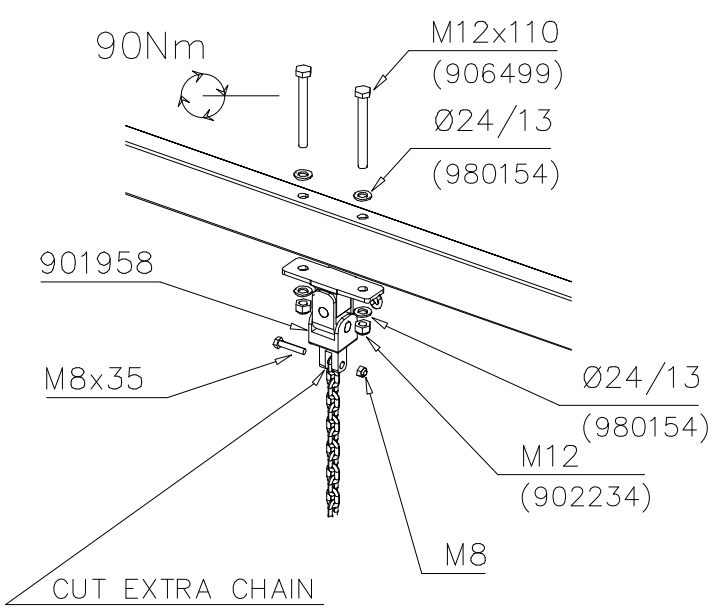

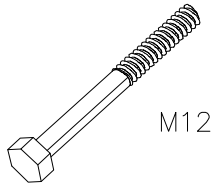
M12x110 2 pcs

Ø24/13 4 pcs

M12 2 pcs

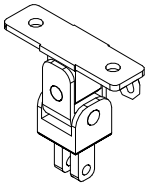
901958 1 pcs

DET D

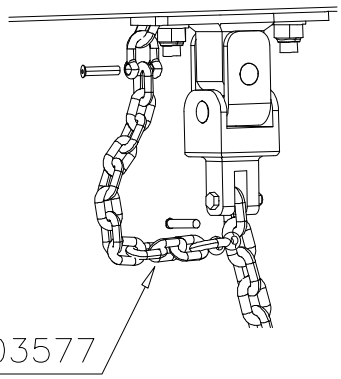

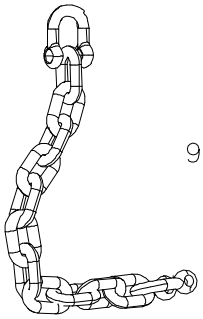
903577 1 pcs

DET E

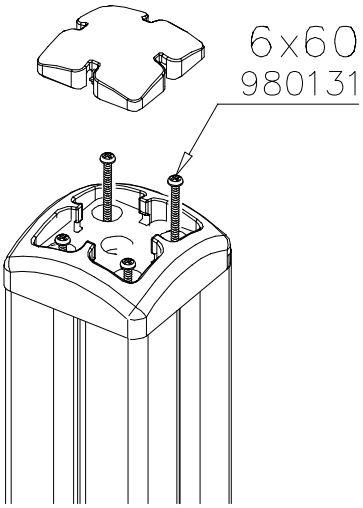

980131 4 pcs

905138 1 pcs

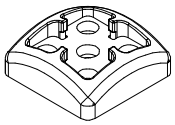
905196 1 pcs

Copyright Lappset Group Ltd

LAPPSET®
FINNO

SWING PARTS

(4/4)

REF: SWING
DATE: 29.6.2022

DET F

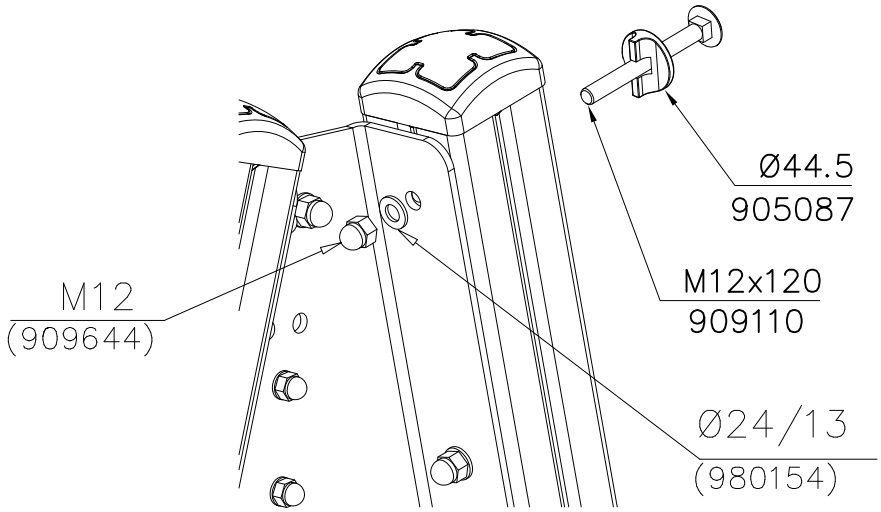

M12x120 6 pcs

Ø24/13 6 pcs

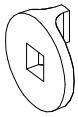
Ø44.5 6 pcs

M12 6 pcs

DET G

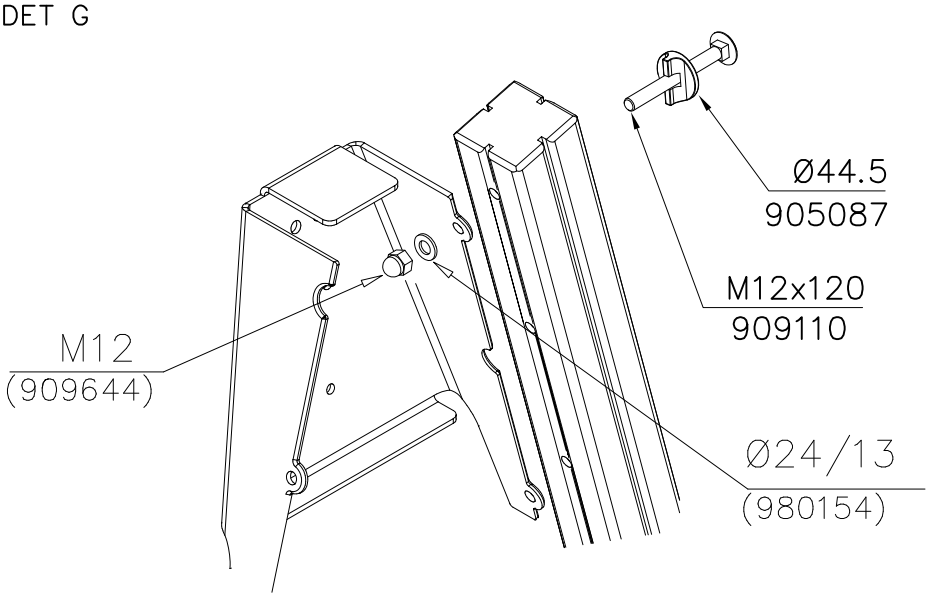

M12x120 6 pcs

Ø24/13 6 pcs

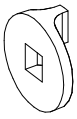
Ø44.5 6 pcs

M12 6 pcs

Copyright Lappset Group Ltd

LAPPSET®

SECURING

CLOXX

DATE: 3.10.2012

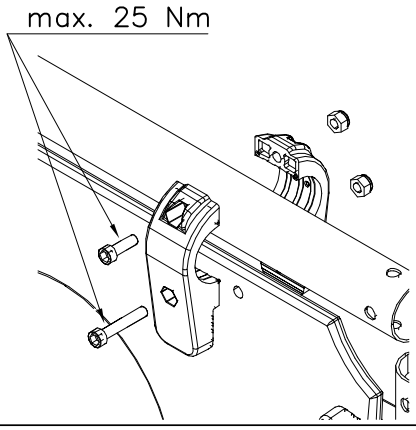

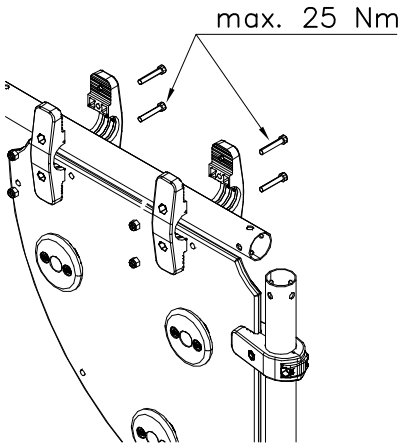

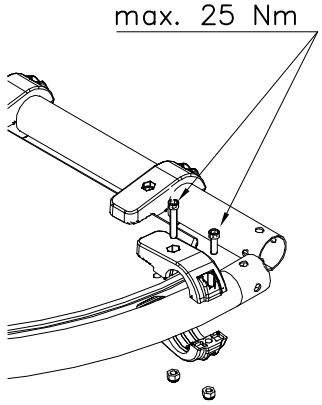

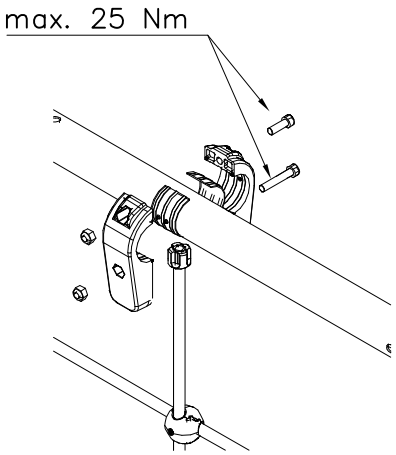

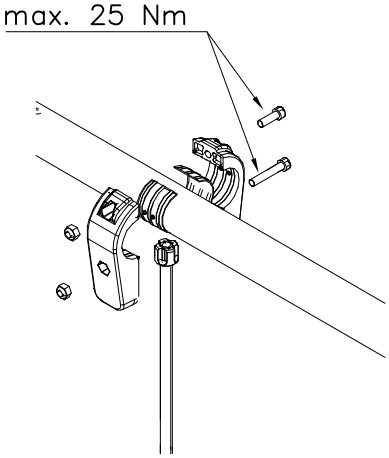

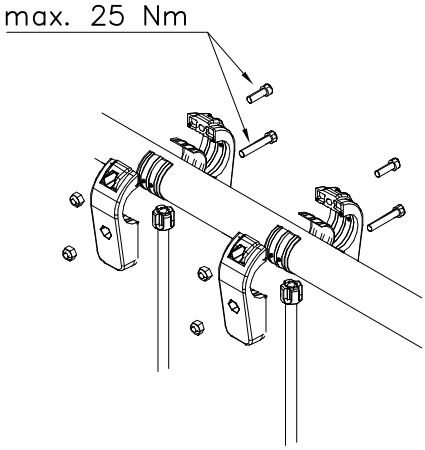

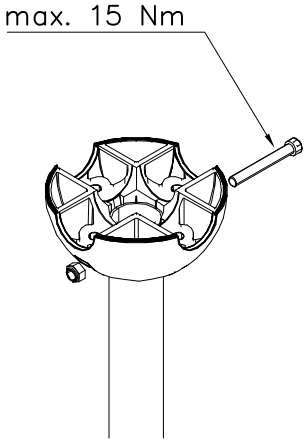

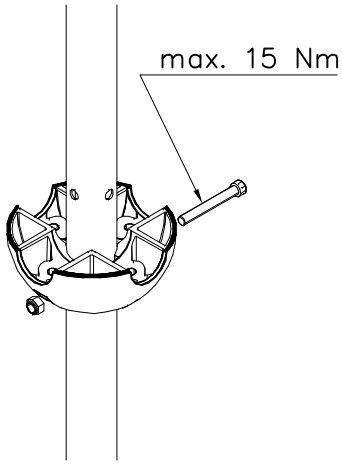

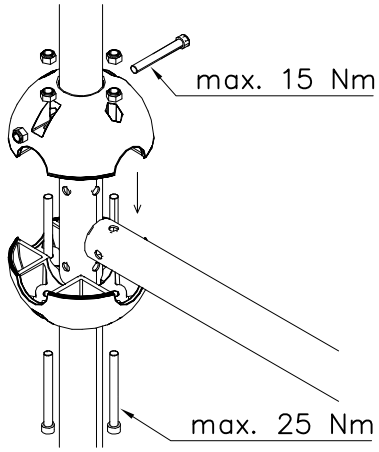

Security plugs are included only for selected products.

Hox!
Pultit on kiristettävä lopulliseen kireyteen, ennen turvapinnien asennusta.

Note!
Tighten bolts properly, before installing security plugs.

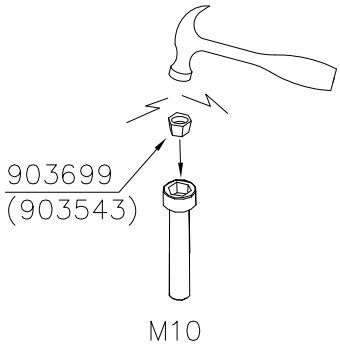

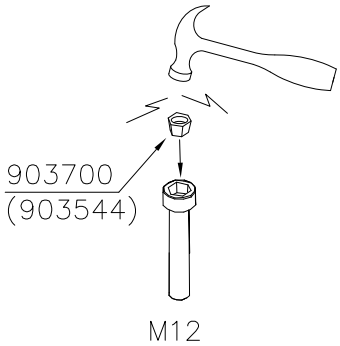

Copyright Lappset Group Ltd

LAPPSET® PARTS

CLOXX / FINNO ABC

DATE: 2.9.2020

DET 1

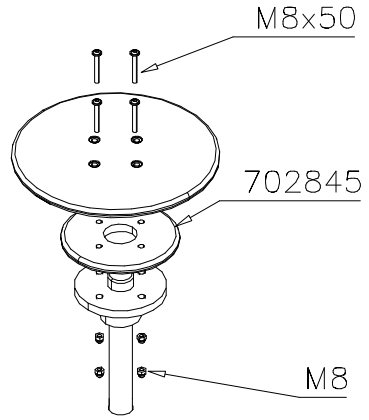

DET 2

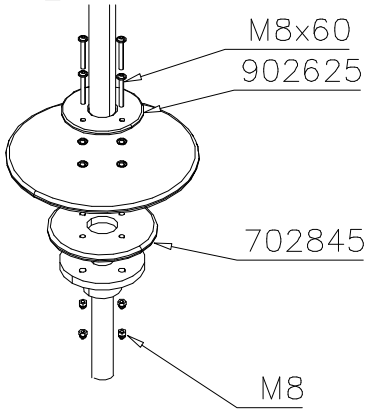

DET 3

DET 4

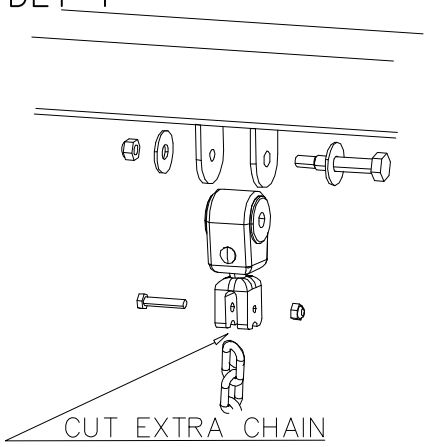

DET 5

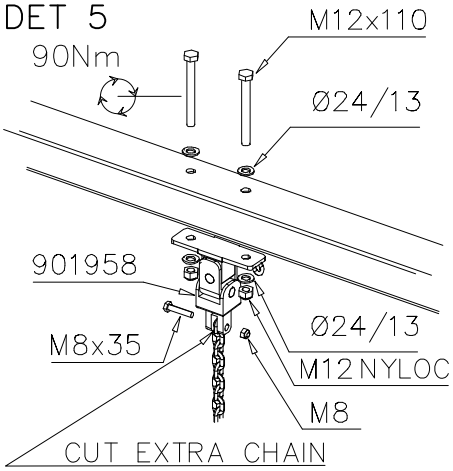

DET 6

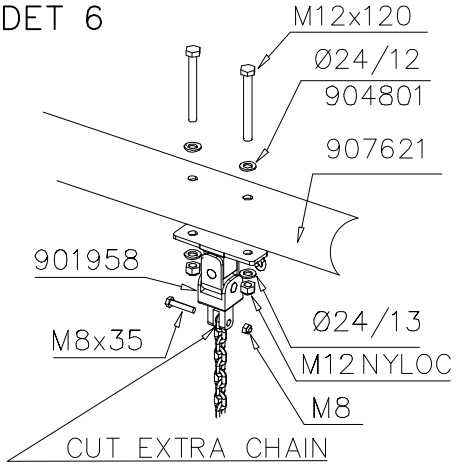

DET 7

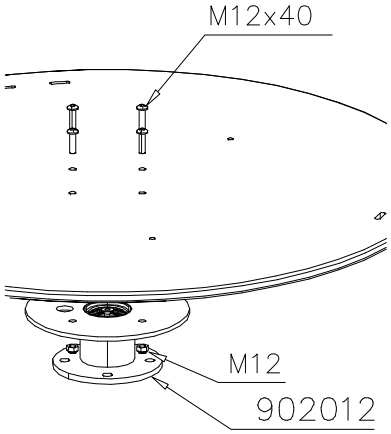

DET 8

NOTE:
Aluminum thread fasten carefully.

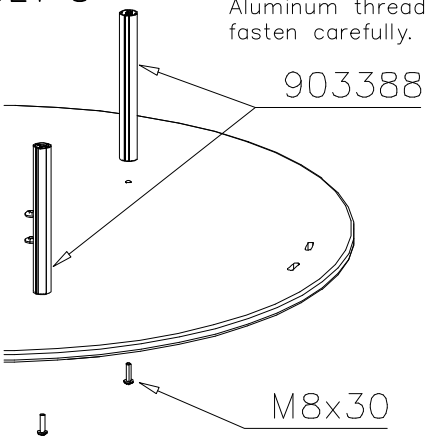

DET 9

NOTE:
Aluminum thread fasten carefully.

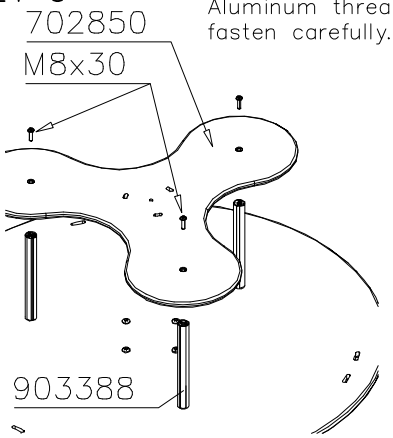

DET 10

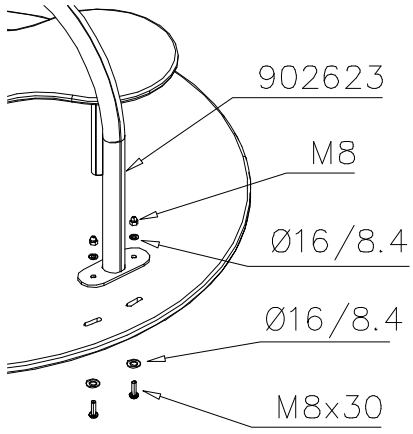

DET 11

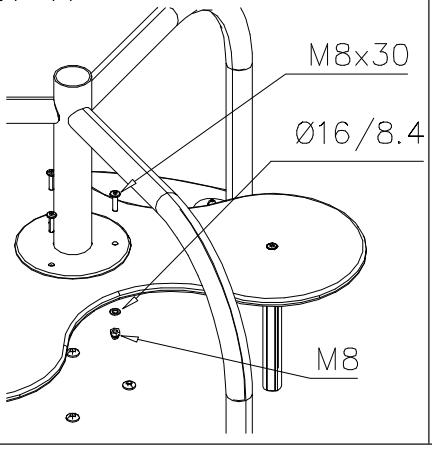

DET 12

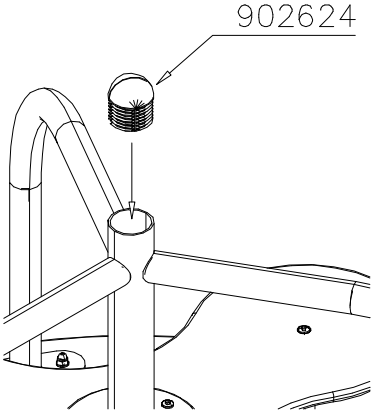

Copyright 1998 Lappset Group Ltd

LAPPSET® PARTS

CLOXX / FINNO ABC

DATE: 2.9.2020

DET 13

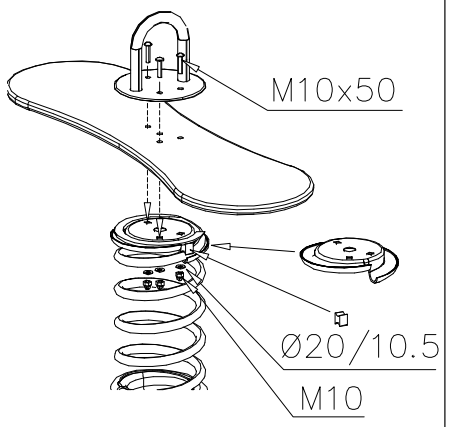

DET 14

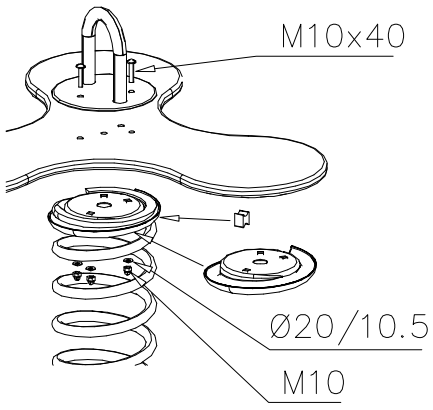

DET 15

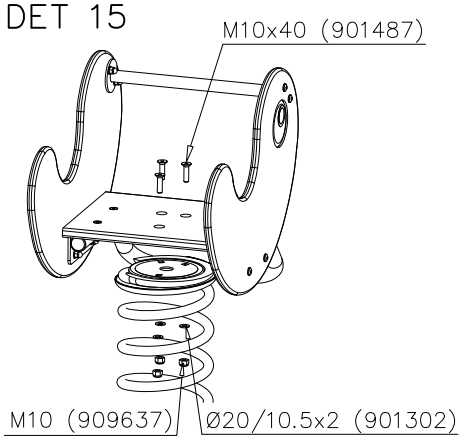

DET 16

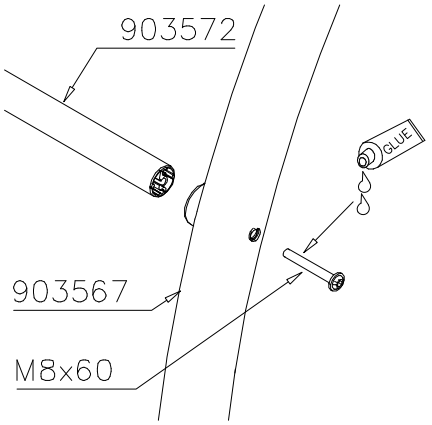

DET 17

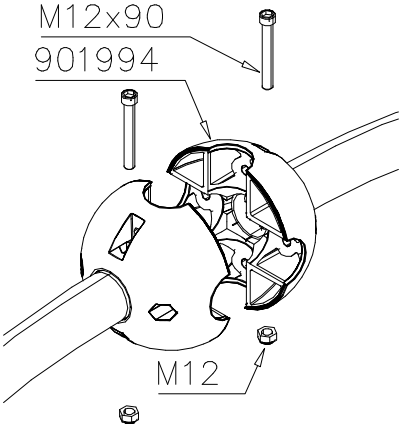

DET 18

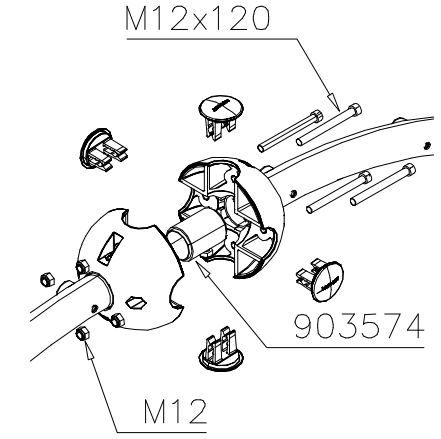

DET 19

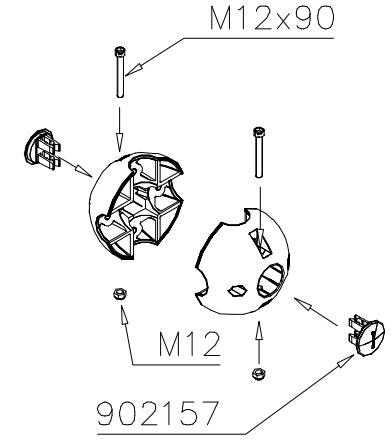

DET 20

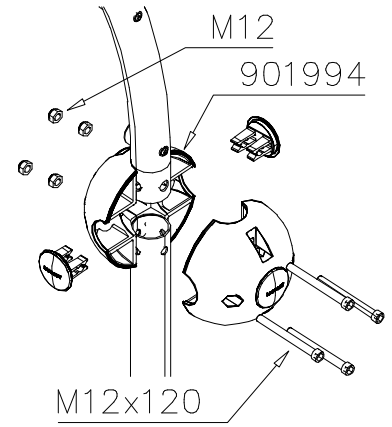

DET 21

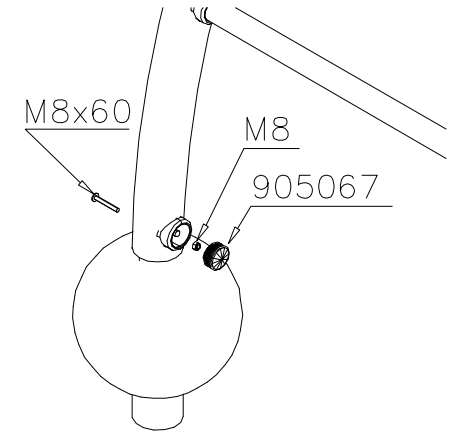

DET 22

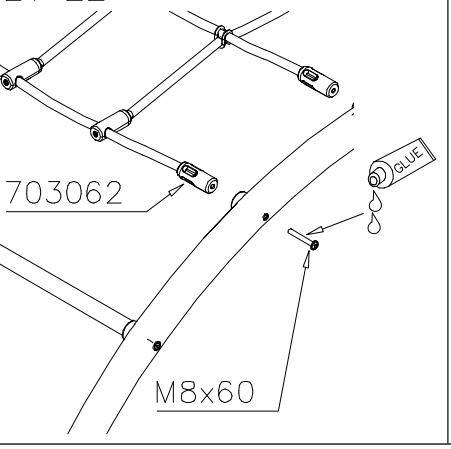

DET 23

DET 24

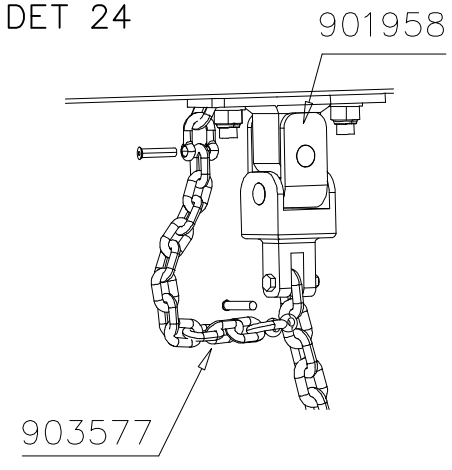

Copyright 1998 Lappset Group Ltd

LAPPSET® PARTS

CLOXX / FINNO ABC

DATE: 2.9.2020

DET 25–26

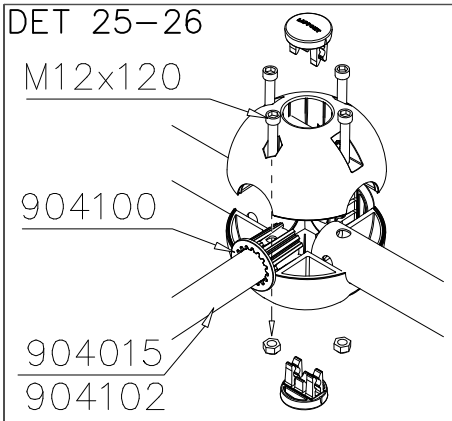

Kun putken pää osuu adapterin kynsiin, adapteri tiukentuu paikoilleen.

Asennusjärjestys:
1) Pallo kiinni
2) Adapteeri sisään
3) putki sisään ja lopuksi pallon lopullinen kiristys.

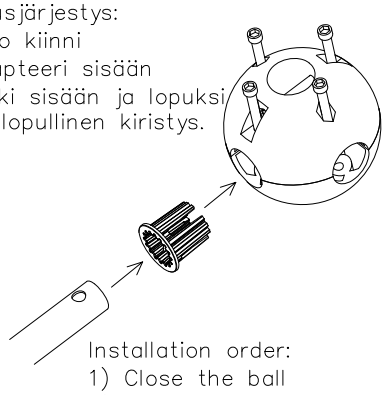

Installation order:
1) Close the ball
2) Insert adapter
3) Insert tube and tighten screws.

DET 27

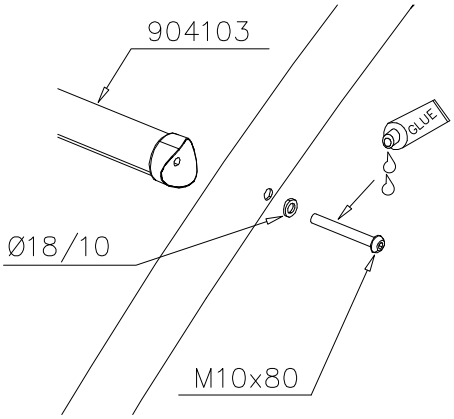

DET 28

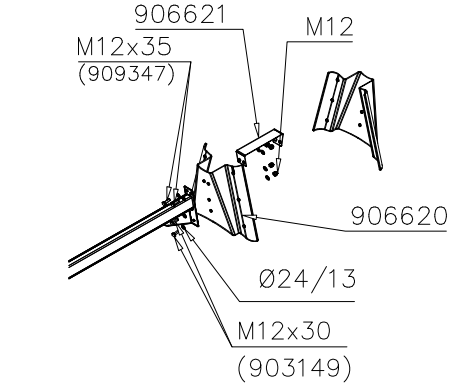

M12 ⟶ 60 Nm

DET 29

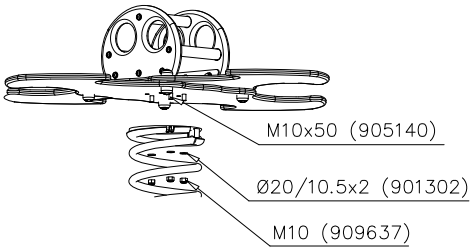

DET 30

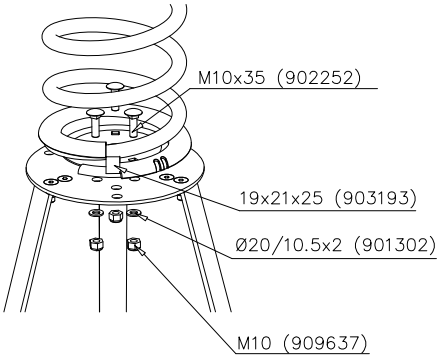

DET 31

M12 ⟶ 60 Nm

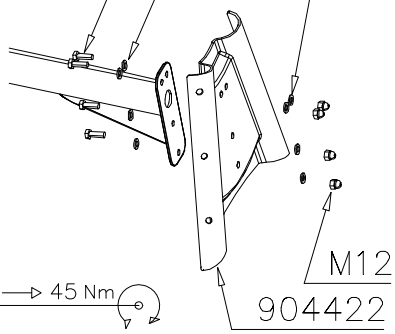

M10 ⟶ 45 Nm

DET 32

M12 ⟶ 60 Nm

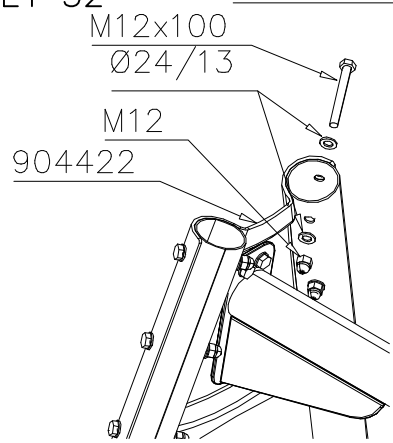

DET 33

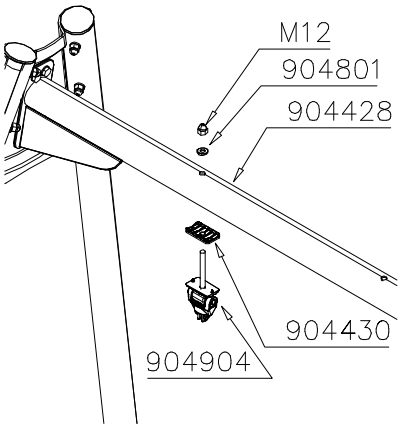

DET 34

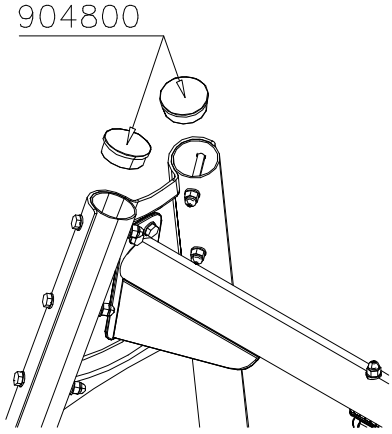

DET 35

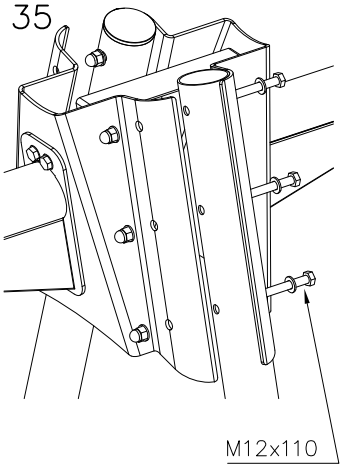

DET 36

Copyright 1998 Lappset Group Ltd

LAPPSET® BASE

CLOXX / FINNO ABC

DATE: 19.11.2012

DET 1

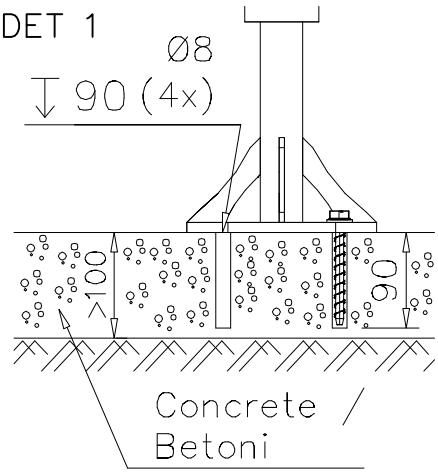

DET 2

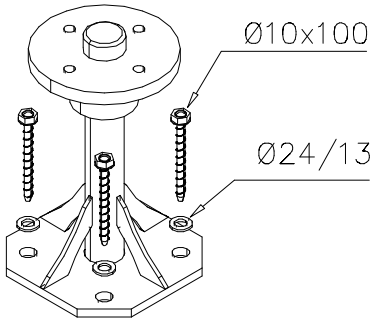

DET 3

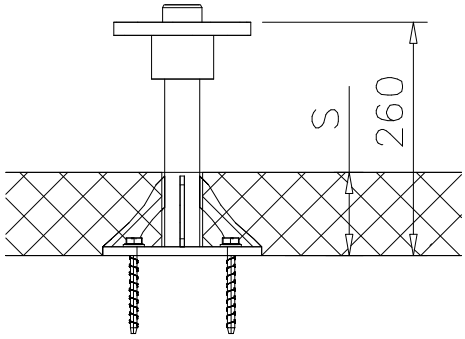

DET 4

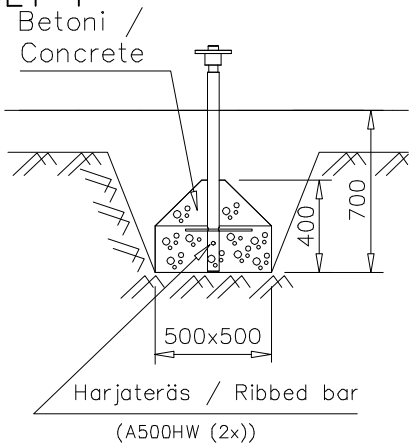

DET 5

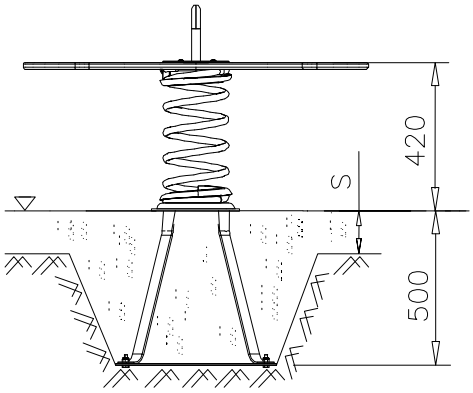

DET 6

DET 7

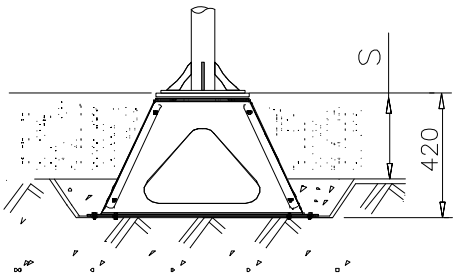

DET 8

DET 9

DET 10

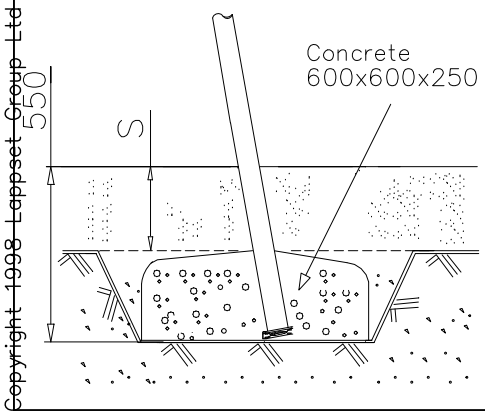

DET 11

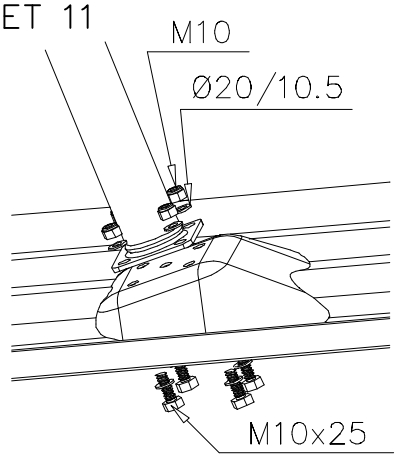

DET 12

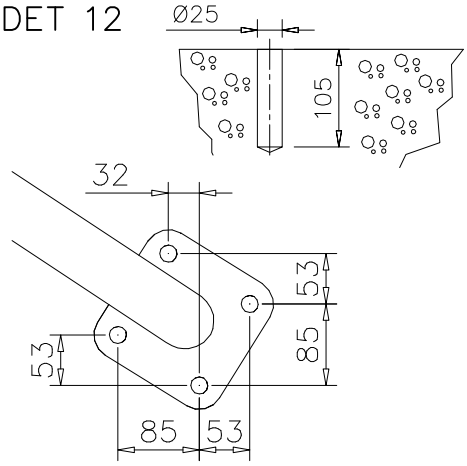

Copyright 1998 Lappset Group Ltd

LAPPSET® BASE

CLOXX / FINNO ABC

DATE: 13.10.2021

DET 13

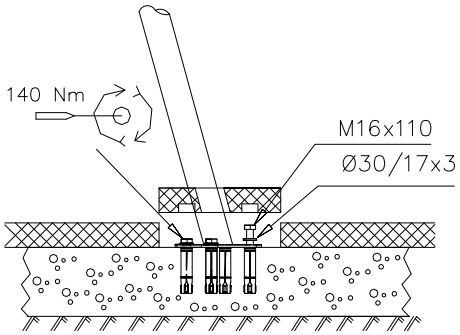

DET 14

DET 15

DET 16

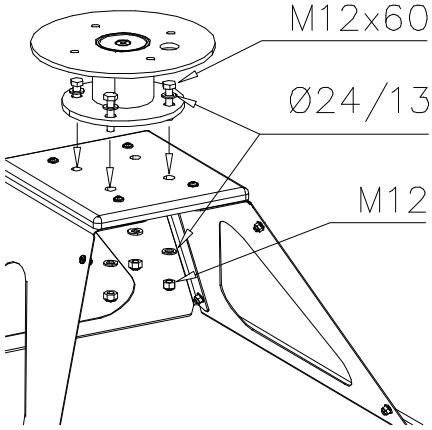

DET 17

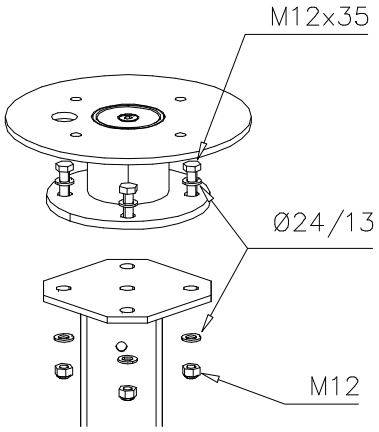

DET 18

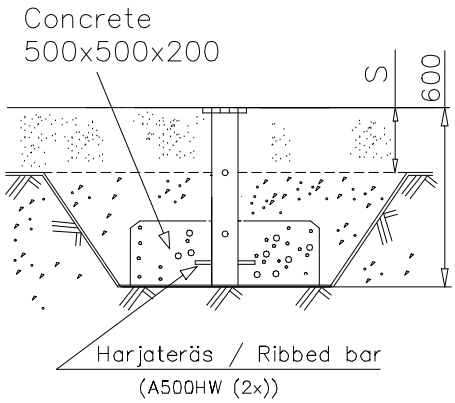

DET 19

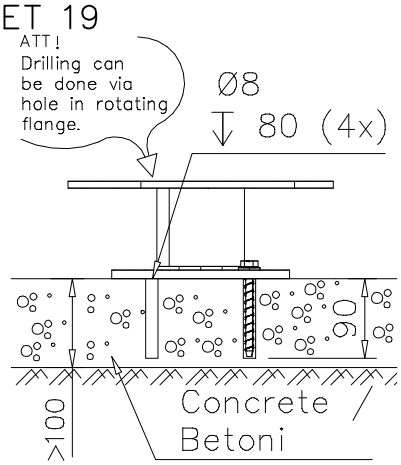

DET 20

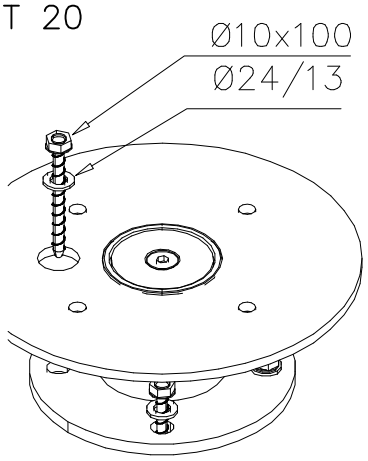

DET 21

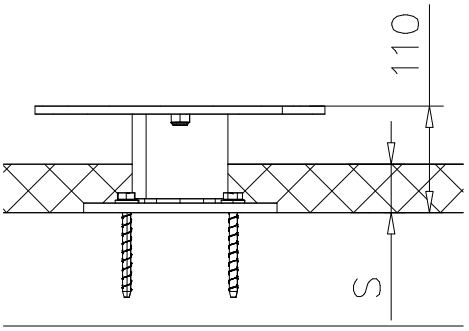

DET 22

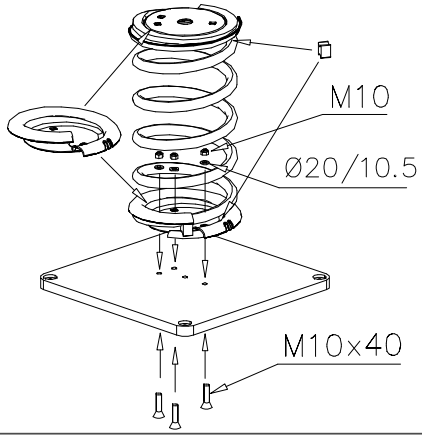

DET 23

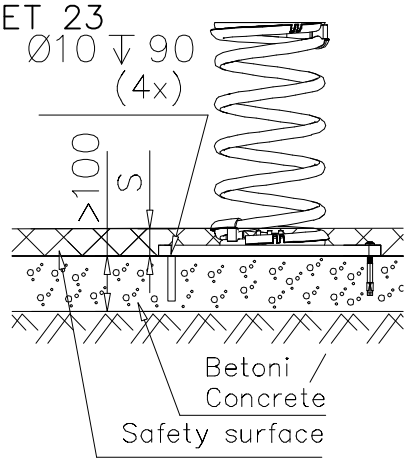

DET 24

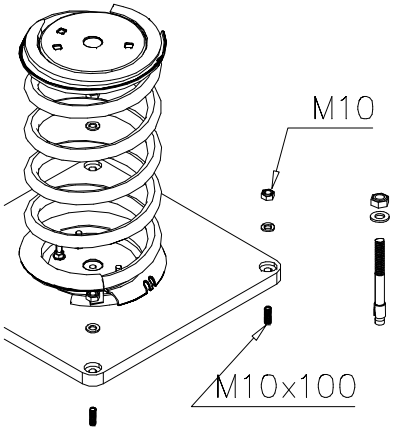

Copyright 1998 Lappset Group Ltd

LAPPSET® BASE

CLOXX / FINNO ABC

DATE: 19.11.2012

DET 25

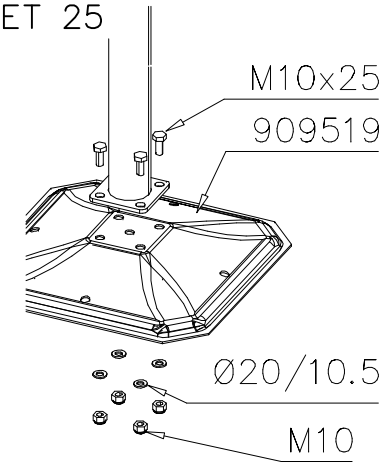

DET 26

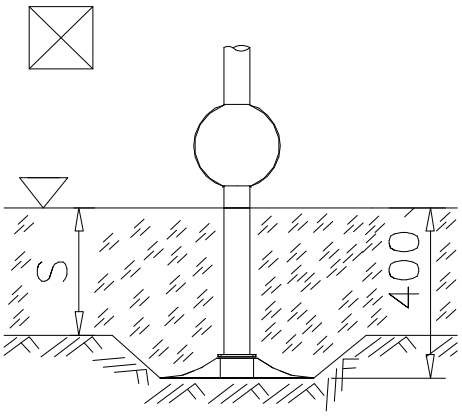

DET 27

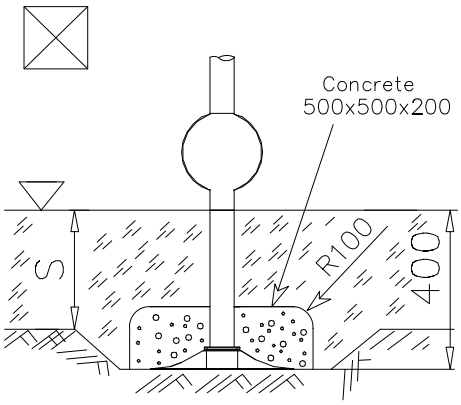

DET 28

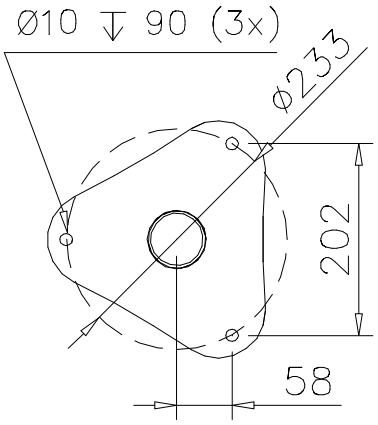

DET 29

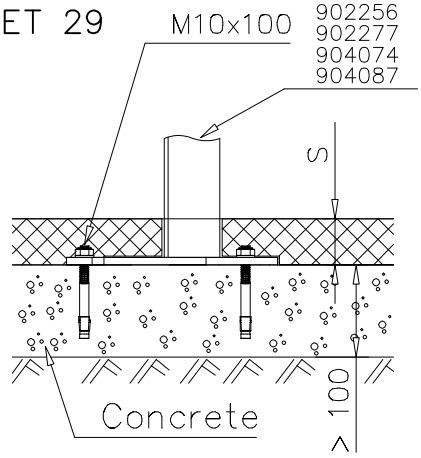

DET 30

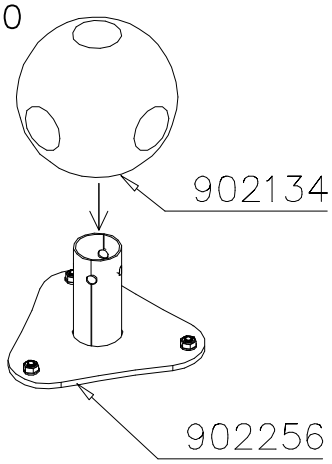

DET 31

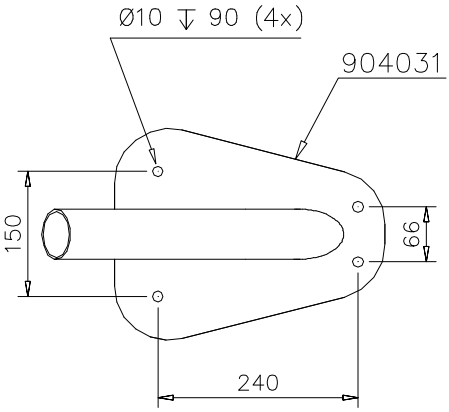

DET 32

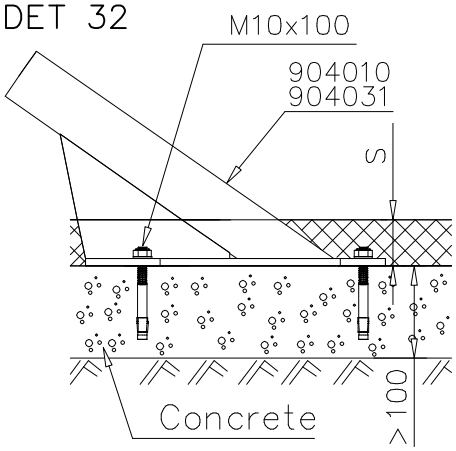

DET 33

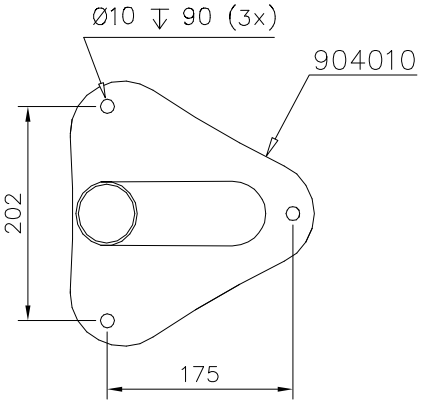

DET 34

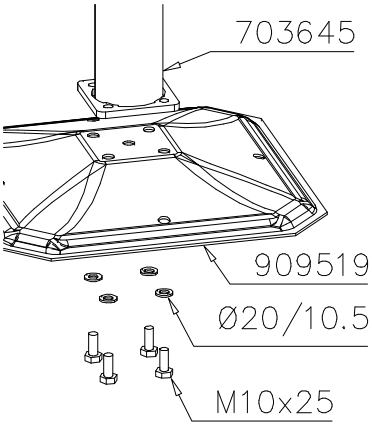

DET 35

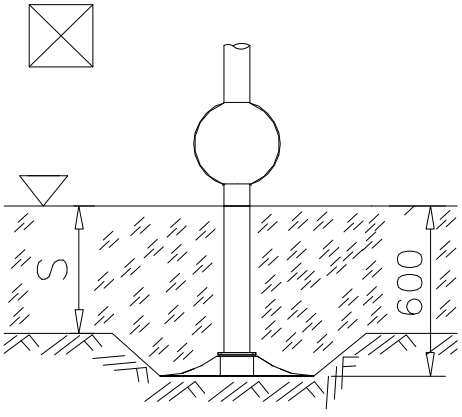

DET 36

Copyright 1998 Lappset Group Ltd