LAPPSET

RF4040M

NIFO BENCH 2-seater



Elegant Nifo family is a design with smooth and curved lines with good sitting comfort, even the tabletop is a bit rounded. Nifo is our largest bench family with one, two and three seaters with and without backrest and with and without handrests. Tables include round and square models. Wooden parts are tight northern pinewood with five standard paint colors and Linax oilimpregnation treatment as sixth color option. Metal parts have four standard colors but also customized special colors can be painted. Installation versions are deep mounting with long underground legs and surface standing with skids agains the ground.

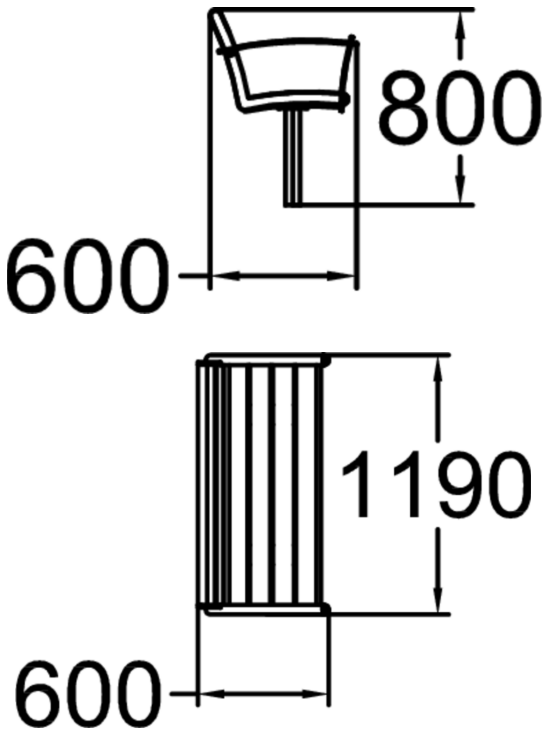

Product length, mm	1690
Product width, mm	600
Product height, mm	810
Foundation options	free_standing
Wood	
Metal	

LAPPSET GROUP LTD
P.O. Box 8146, 96101 Rovaniemi, Finland
lappset@lappset.com | www.lappset.com

© Lappset Group Ltd. All Rights Reserved.