LAPPSET

RF2310M

SCANDINAVIA SENIOR BENCH



Popular Scandinavia family has also an inclusive Senior bench model with handrests and straighter and higher sitting position to assist people sit down and get up easier. Scandinavia Senior has two mounting versions; deep & surface mounting.

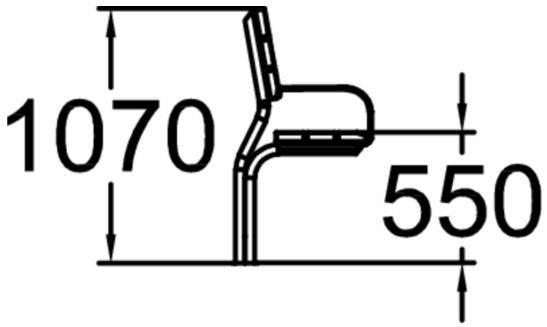

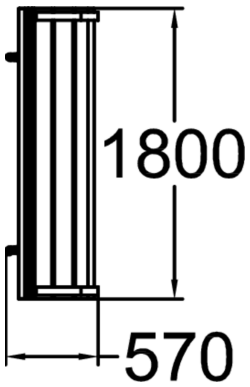

Product length, mm	1795
Product height, mm	1000
Wood	
Metal	

LAPPSET GROUP LTD
P.O. Box 8146, 96101 Rovaniemi, Finland
lappset@lappset.com | www.lappset.com

© Lappset Group Ltd. All Rights Reserved.