LAPPSET

061106M

Divan 6-seater



The Momentum Divan 061106M features a unique, wide, and double-sided bench, making it ideal for gathering spaces or urban pathways where social interaction and convenience are key. The bench is crafted with glue-laminated northern pine seat planks, sized at 1800x42x120, available in natural tones or treated with paint or linseed oil for added refinement and durability. The 061106M model includes an 8mm metal frame with a 90mm width, powder-coated in dark grey, black, or custom colours to suit various design contexts. Designed with modularity in mind, this divan adds a practical dimension to encouraging conversations and social connections. Installation options include free-standing, surface fixation, and ground mounting with long underground legs, ensuring stability and adaptability in different urban settings. The Momentum Bench reflects the core principles of Scandinavian design, blending playful minimalism with a warm, contemporary feel that enhances any urban environment.

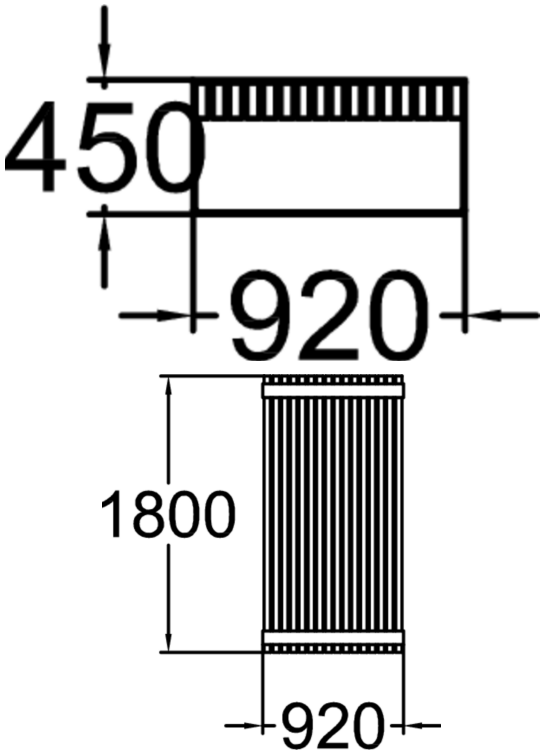

Product length, mm	1800
Product width, mm	916
Product height, mm	458
Foundation options	ground_anchoring surface_mounting
Wood	nding
Metal	

LAPPSET GROUP LTD
P.O. Box 8146, 96101 Rovaniemi, Finland
lappset@lappset.com | www.lappset.com

© Lappset Group Ltd. All Rights Reserved.